Keithley 660A - Differential Voltmeter



The Keithley 660A is a differential voltmeter which can be used as potentiometer or as VTVM.

As potentiometer it can measure from 100 microvolts full scale to 500 volts, with an error lower than 0.02% in the ranges from 100 mV up. As VTVM it reads from 1 mV to 500 V with 3% accuracy and resistances up to 100.000 megahoms.

Input resistance depends upon the selected range, being 50 Mohms from 0.1 V full scale, and raises to infinity at the null. The meter includes a 500 VDC precision voltage reference, the Kelvin-Varley divider and the chopper stabilized null detector. Below a simplified block diagram. Here is the full manual

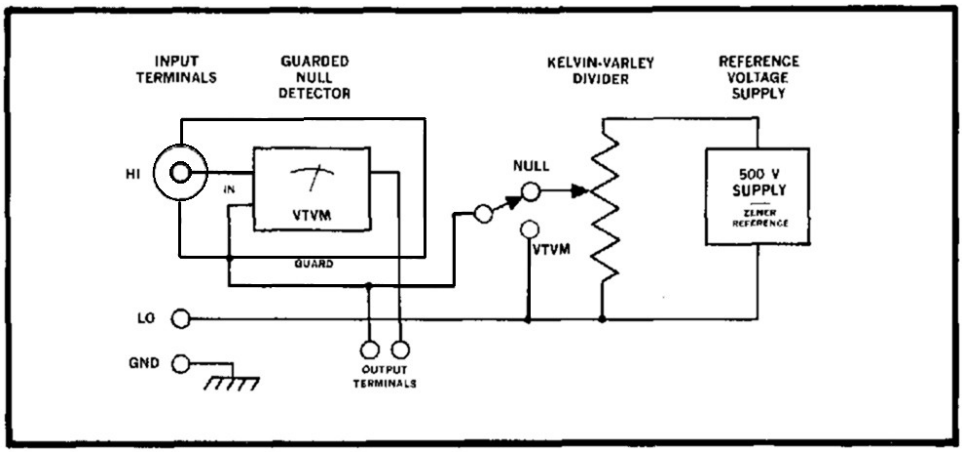

Below, the full manual is available.

complete manual MASTER Model 660A

INSTRUCTION MANUAL

MODEL 660A

GUARDED DC

DIFFERENTIAL VOLTMETER

WARRANTY

We warrant each of our products to be free from defects in material and workmanship. Our obligation under this warranty is to repair or replace any instrument or part thereof (except tubes and batteries) which, within a year after shipment, proves defective upon examination. We will pay domestic surface freight costs.

To exercise this warranty, call your local field representative or the factory, DDD 216-795-2666. You will be given assistance and shipping instructions.

REPAIRS AND RECALIBRATION

Keithley Instruments maintains a complete repair service and standards laboratory in Cleveland, and has an authorized field repair facility in Los Angeles.

To insure prompt repair or recalibration service, please contact your local field representative or the plant directly before returning the instrument.

Estimates for repairs, normal recalibrations, and calibrations traceable to the National Bureau of Standards are available upon request.

TABLE OF CONTENTS

Section		Page
1.	GENERAL DESCRIPTION	1
1-1.	Description	1
1-2.	Operating Modes	1
1-3.	Applications	1
1-4.	Specifications	2
1-5.	Accessories	3
1-6.	Equipment Shipped	3
2.	OPERATION	5
2-1.	Front Panel Controls and Terminals	5
2-2.	Rear Controls and Terminals	5
2-3.	Preliminary Procedures	6
2-4.	Operating Procedures	6
2-5.	Recorder Output	8
2-6.	Effects Due to Kelvin-Varley Divider Output Resistance	9
2-7.	Loading and Off-Null Resistance	9
2-8.	Thermal EMF Precautions	10
2-9.	AC Effects on Measurement	10
3.	APPLICATIONS	11
3-1.	Procedures for Measuring Resistances	11
3-2.	Theory of Measuring Resistances	11
4.	CIRCUIT DESCRIPTION	13
4-1.	General	13
4-2.	Reference Voltage Supply	13
4-3.	Kelvin-Varley Divider	14
4-4.	Null Detector	14
4-5.	Guarding	15
5.	SERVICING	17
5-1.	General	17
5-2.	Servicing Schedule	17
5-3.	Parts Replacement	17
5-4.	Troubleshooting	17
5-5.	Adjusting Hum Bal Control	19
5-6.	Zener Diode Replacement	19
5-7.	Meter Adjustment	19
6.	CALIBRATION	21
6-1.	General	21
6-2.	Calibration Schedule	22
6-3.	Kelvin-Varley Divider Verification	22
6-4.	Range Calibration	23
6-5.	Reference Voltage Supply Stability Test	25
6-6.	Oscillator Adjustment	27
7.	ACCESSORIES	35
7-1.	Model 6601A High Voltage Divider	35
7-2.	Rack Mounting	35
7-3.	Placing in Rack	36
8.	REPLACEABLE PARTS	37
8-1.	Replaceable Parts List	37
8-2.	How to Order Parts	37
	Model 660A Replaceable Parts List	38
	Model 6601A Replaceable Parts List	44
	Model 660A Schematic Diagram 18269E	47
	Model 6601A Schematic Diagram 16321B	49

* Change Notice

* Yellow Change Notice sheet is included only for instrument modifications affecting the Instruction Manual.

SECTION 1. GENERAL DESCRIPTION

1-1. DESCRIPTION.

a. The Keithley Model 660A Guarded dc Differential Voltmeter is a convenient, self-contained potentiometer. It measures from 100 millivolts to 500 volts with 0.02% limit of error, and below 100 millivolts within 20 microvolts. Since the limit of error includes all stability considerations, the unit need not be periodically calibrated or manually restandardized for a full year. The 500-volt reference supply permits infinite impedance at null for measurements from 0 to 500 volts.

b. Features for convenient use include: five in-line readout dials with automatically lighted decimal points; 10 to 25-millivolt recorder output; input polarity switch; floating operation up to 500 volts off chassis ground; line frequency rejection greater than 45 db. Also, full guarding minimizes leakage problems.

1-2. OPERATING MODES. The Model 660A can be used as a potentiometer or as a conventional vacuum tube voltmeter. As a potentiometer, it can measure from 100 millivolts full scale to 500 volts with ±0.02% limit of error and from 100 microvolts full scale to 100 millivolts within 20 microvolts. As a VTVM, the Model 660A measures from 1 millivolt full scale to 500 volts with an accuracy of ±3% of full scale. It can also measure resistances from 10 megohms to 100,000 megohms within ±5%.

1-3. APPLICATIONS.

a. The Model 660A is used for measurements over a wide range. Typical applications in the microvolt region are the matching of semiconductors and the monitoring of noise, transients and drift. High level voltage applications include power supply and meter calibration, and tube potential measurements.

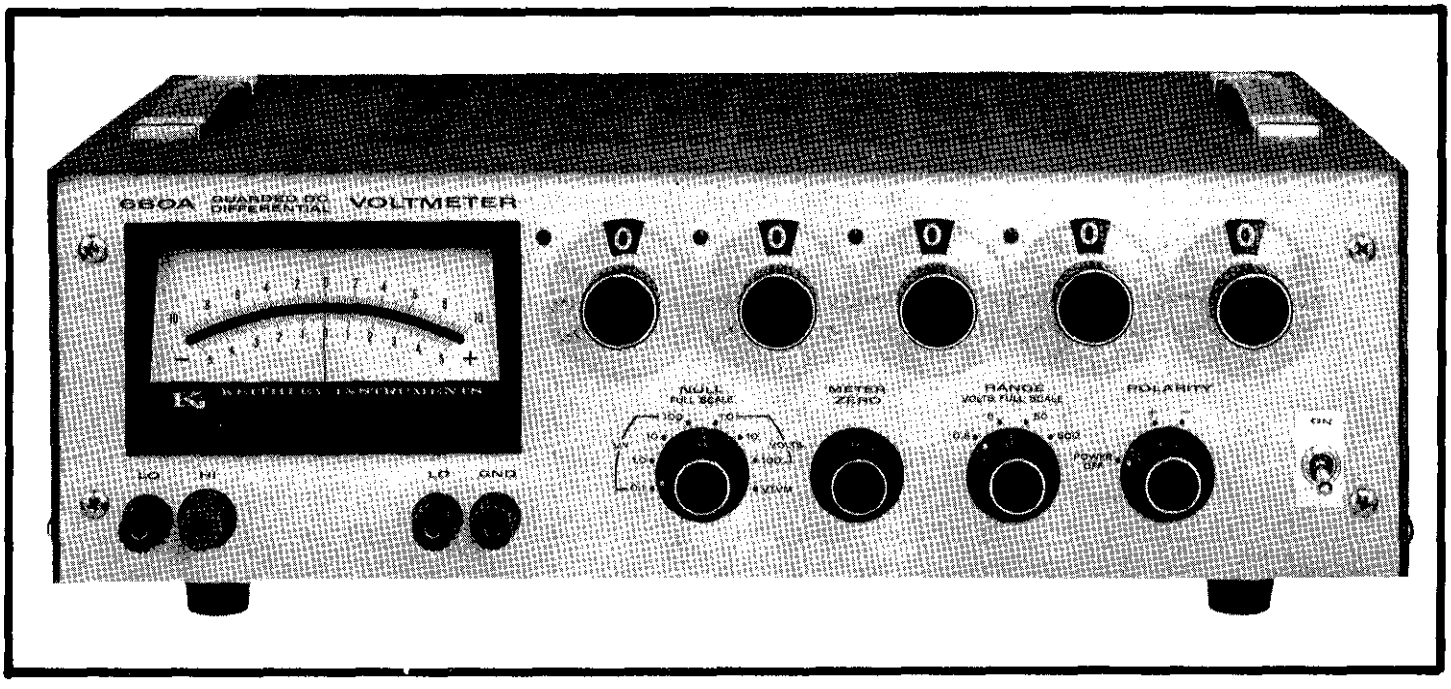

FIGURE 1. Keithley Instruments Model 660A Guarded dc Differential Voltmeter.

b. Its long-term stability makes the Model 660A useful in measurements of extended duration. Measurements of long-term power supply stability, long-term drift runs, and monitoring during environmental and reliability tests are possible uses.

c. The null-detector output permits use with potentiometric recorders and digital voltmeters equipped with automatic print-out. The Model 660A is useful in quality control, product development, inspection and production.

d. Floating operation to 500 volts is provided for measurements such as plate potential differences of balanced amplifiers.

1-4. SPECIFICATIONS.

AS A POTENTIOMETER:

LIMIT OF ERROR: ±0.02% of reading or 20 microvolts, whichever is greater, after 30-minute warm-up.

LONG-TERM STABILITY: Will operate within stated limit of error for one year.

TEMPERATURE COEFFICIENT: Does not exceed 0.002% per °C.

REPEATABILITY: Within 0.005%.

MAXIMUM NULL SENSITIVITY: 100 microvolts full scale with 2-microvolt resolution.

INPUT RESISTANCE: Infinite at null, from 0 to 500 volts.

FLOATING OPERATION: 500 volts maximum off chassis ground.

INPUT ISOLATION: Circuit ground to chassis ground: 10^8 ohms shunted by 0.05 microfarad.

RESOLUTION CHART:

Input Voltage Range, volts	Maximum Dial Resolution, millivolts	Maximum Usable Full-Scale Null Sensitivity, millivolts	Meter Resolution, microvolts
50 - 500	10	10	100
5 - 50	1	1	10
0.5 - 5	0.1	0.1	2
0 - 0.5	0.01	0.1	2

AS A VACUUM TUBE VOLTMETER:

VOLTAGE RANGES: 0.5 volt full scale to 500 volts in four decade ranges.

NULL RANGES: 100 microvolts full scale to 100 volts in seven decade ranges.

VTVM ACCURACY: ±3% of full scale on all ranges, exclusive of noise and drift.

ZERO DRIFT: Less than 10 microvolts per 24 hours, non-cumulative, after 30-minute warm-up.

INPUT RESISTANCE: 50 megohms, 0.5 to 500-volt ranges;
10 megohms, 0.1-volt range;
1 megohm, 0.1 to 10-millivolt ranges.

LINE FREQUENCY REJECTION: Greater than 45 db.

GENERAL:

LINE STABILITY: Better than 5 ppm for 10% change in line voltage.

RECORDER OUTPUT:
Output: Adjustable 10 to 25 millivolts dc for full-scale meter deflection.
Output Resistance: 300 ohms maximum.
Noise: 2 microvolts peak-to-peak referred to input up to 1 cps.
Note: Recorder used must have fully isolated input, 10^{10} ohms minimum to ground.

POLARITY: Positive or negative, selectable by switch.

CONNECTORS: Input: Binding posts. Output: Banana jacks.

POWER: 105-125 or 210-250 volts (switch selected), 50-400 cps, 45 watts.

DIMENSIONS, WEIGHT: 5-1/2 inches high x 17-1/2 inches wide x 13-1/2 inches deep; net weight, 24 pounds.

1-5. ACCESSORIES.

a. Model 6601A High Voltage Divider is a 100:1 divider which extends the range of the Model 660A to 5000 volts. The divider accuracy is ±0.01% and its input resistance is 10 megohms. The overall limit of error of the Model 660A with the Model 6601A is ±0.03%. Section 7 gives operating instructions and Section 8 contains the Replaceable Parts List and the Schematic Diagram for the Divider.

b. Model 4000 Rack Mounting Kit, containing two brackets and a top cover, converts the Model 660A to fit standard 19-inch racks. Rack mounted, the Model 660A is 5-1/4 inches high x 19 inches wide x 13-1/2 inches deep. Section 7 has assembly instructions.

1-6. EQUIPMENT SHIPPED. The Model 660A Guarded dc Differential Voltmeter is factory-calibrated and is shipped with all components in place. All units are shipped for bench use. Model 4000 Kit may be ordered for rack mounting; refer to Section 7 for assembly instructions. The shipping carton also contains the Instruction Manual.

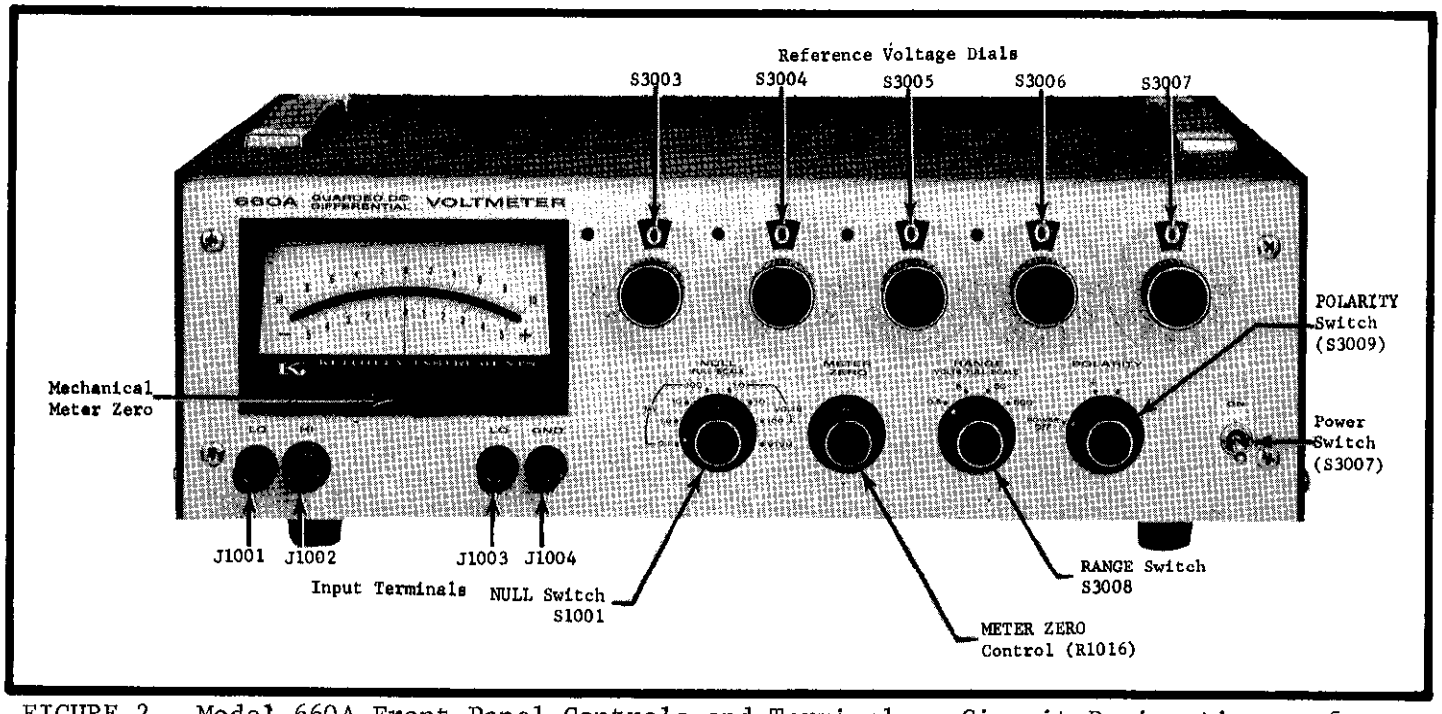

FIGURE 2. Model 660A Front Panel Controls and Terminals. Circuit Designations refer to Replaceable Parts List and the Schematic Diagram.

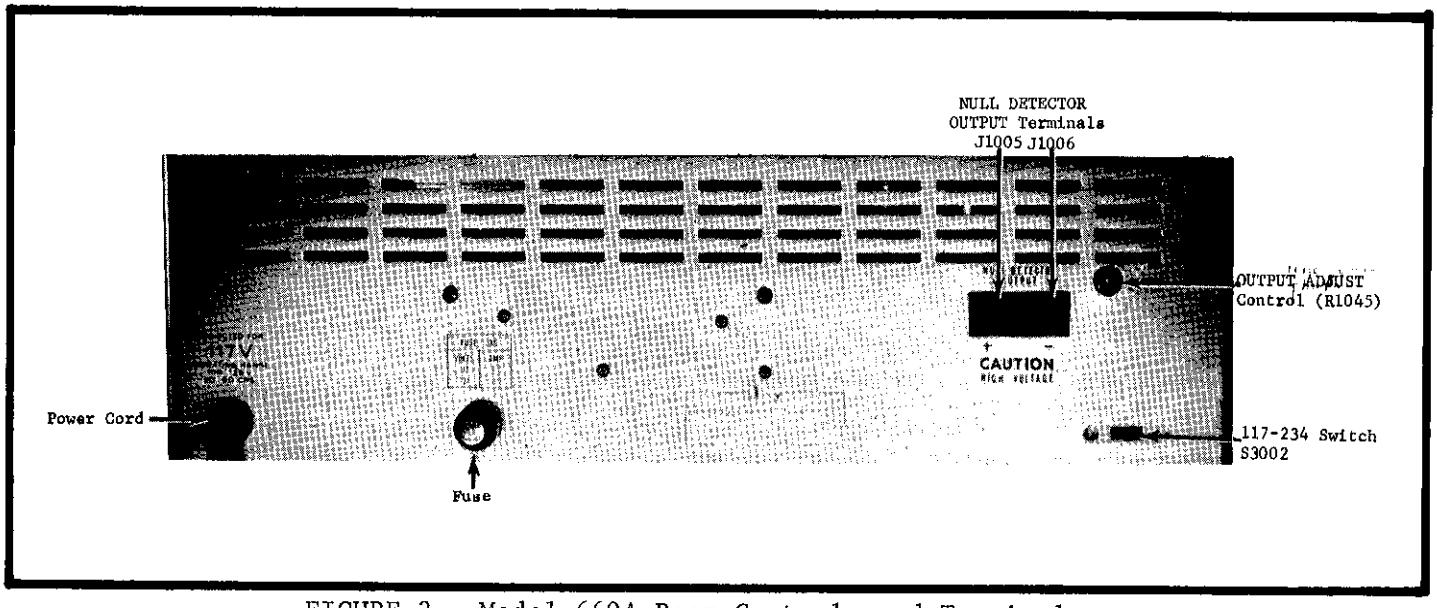

FIGURE 3. Model 660A Rear Controls and Terminals.

SECTION 2. OPERATION

2-1. FRONT PANEL CONTROLS AND TERMINALS. (See Figure 2.)

a. Power Switch. A toggle switch turns the instrument on when it is set to the ON position.

b. POLARITY Switch. The POLARITY Switch selects the input polarity. The Switch reverses the polarity of the internal reference voltage supply so both positive and negative voltages may be measured; it does not reverse the meter polarity.

c. NULL Switch. The NULL Switch sets the null detector sensitivity for seven decade ranges from 0.1 millivolt full scale to 100 volts. When the Switch is in the VTVM position, the Model 660A operates as a conventional vacuum tube voltmeter for the four ranges of the RANGE Switch.

d. RANGE Switch. The RANGE Switch adjusts the sensitivity of the VTVM in four steps: 0.5, 5, 50 and 500 volts full scale. It also determines the voltage across the Kelvin-Varley divider and the position of the decimal point light — which also serves as a pilot light — between the five Reference Voltage Dials.

e. Reference Voltage Dials. Five in-line dials at the top of the front panel set the reference voltage when the Model 660A is used as a potentiometer. The last dial is continuously variable.

f. METER ZERO Control. The METER ZERO Control adjusts the meter needle to zero. The Control is needed on only the 0.1 and 1.0-millivolt null ranges; on the other ranges, the needle will normally be on zero without adjustment. The Control has a range of approximately $\pm$30 microvolts.

g. Input Terminals. At the lower left front panel, the black LO Post is for connections to the low impedance terminal of the unknown voltage and the red HI Post is for connections to the high impedance terminal. A second set of binding posts marked LO and GND is provided for grounding the LO input terminal to the chassis when desired. The LO terminals are connected together internally.

2-2. REAR CONTROLS AND TERMINALS. (See Figure 3.)

a. Fuse. For 105-125 volt operation, the Model 660A uses a 1-ampere 3 AG fuse. For 210-250 volt operation, the Model 660A uses a 0.5-ampere 3 AG fuse.

b. Power Cord. The Model 660A is designed for a 105-125 volt, 50-400 cps line source, unless otherwise specified on the rear panel. The 3-wire power cord with the NEMA approved 3-prong plug provides a ground connection for the cabinet. An adapter for operation from 2-terminal outlets is provided.

c. NULL DETECTOR OUTPUT. Two terminals, marked + and -, supply a dc signal from the null detector.

d. OUTPUT ADJUST. A screwdriver control next to the OUTPUT terminals adjusts the null detector output between 10 and 25 millivolts full scale.

e. 117-234 Switch. The screwdriver-operated slide switch sets the Model 660A for 117 or 234-volt ac power lines.

2-3. PRELIMINARY PROCEDURES.

a. Check the 117-234 Switch and the Fuse for the proper ac line voltage. Connect the power cord.

b. Set the Model 660A as follows:

Power Switch	ON
RANGE Switch	500
NULL Switch	VTVM
POLARITY Switch	+
Reference Voltage Dials	Zero

The decimal light between the third and fourth Dials will light. Allow the instrument to warm up for 30 minutes to meet the specified accuracy on all ranges.

c. With the input terminals open, set the NULL Switch to 0.1 MV and zero the meter with the METER ZERO Control. Then return the NULL Switch to VTVM. The stability of the Model 660A is such that no adjustment should be required in eight hours after a 30-minute warm-up.

2-4. OPERATING PROCEDURES.

a. The Model 660A is used first as a VTVM to determine the approximate value of the unknown voltage. It is then used in the potentiometric mode to determine the voltage to ±0.02%.

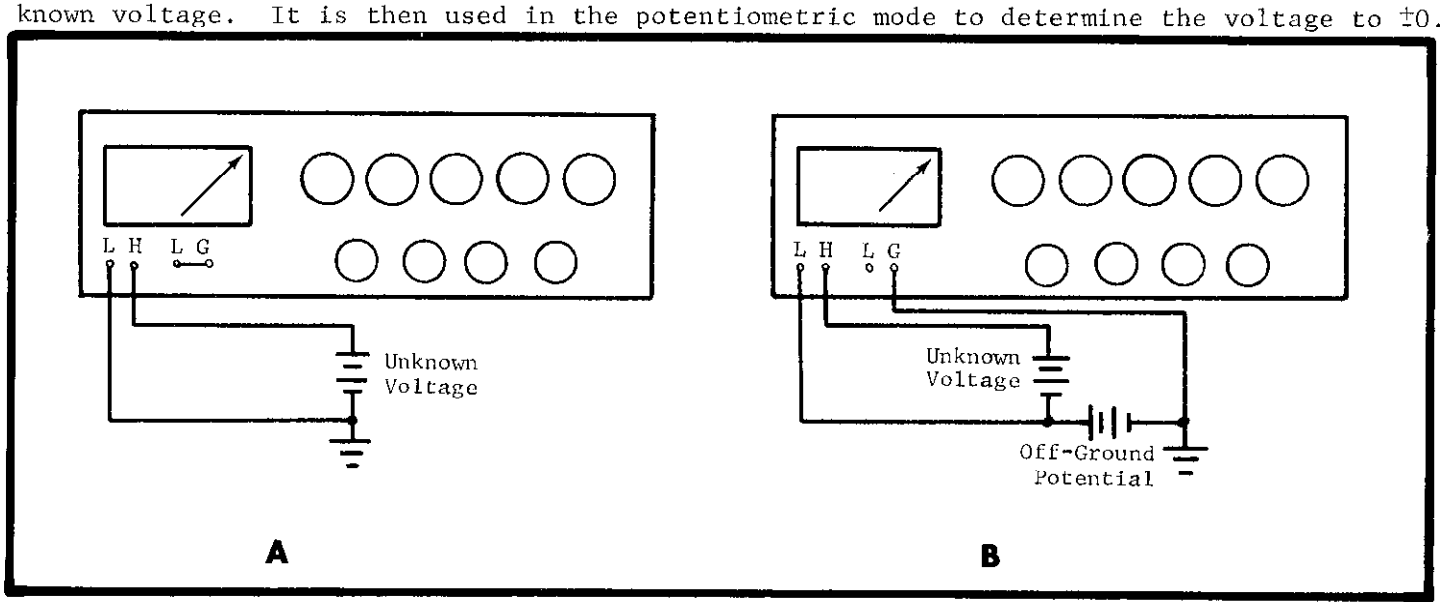

FIGURE 4. Input Connections to Model 660A. The two diagrams show the input circuit for measuring at ground and for floating.

In A, the unknown voltage has one terminal at ground. The shorting link is between the LO and GND Posts of the Model 660A.

In B, the unknown voltage has both terminals off ground potential. Note this floating or off-ground potential must be less than 500 volts. Also note the shorting link is not used.

NOTE

The Model 6601A High Voltage Divider extends the Model 660A range to 5000 volts. Refer to Section 7 for operation instructions.

b. VTVM Operating Procedures.

1. Eleven full-scale ranges are available for VTVM operation. When the NULL Switch is at VTVM, the RANGE Switch determines one of four full-scale ranges. By putting the five Reference Voltage Dials at zero, the Model 660A can then operate as a VTVM on the seven null ranges.

2. Connect the unknown voltage to the input terminals, using the LO Post for the low impedance terminal of the unknown. Refer to Figure 4.

3. Switch the RANGE Switch to the most sensitive range for an on-scale meter deflection.

c. Potentiometric Operating Procedures.

NOTE

Avoid large overload voltages on the null detector. No permanent damage will occur even with 500-volt overloads, but some open circuit offset will be caused in the null detector. The offset, due to the polarization of the input filter capacitors, will disappear after about 5 minutes.

1. Leave the RANGE Switch at the last setting used in the VTVM operation. If the VTVM reading is negative, reverse the POLARITY Switch position.

2. Set the first two Reference Voltage Dials to the first two digits of the unknown voltage found in the VTVM operation.

3. Set the NULL Switch to the initial null setting shown in Table 1. Adjust the Voltage Reference Dials progressively for zero meter deflection while increasing the null detector's sensitivity with the NULL Switch. Deflections to the right indicate the voltage being measured is more positive than the Reference Voltage Dial setting.

RANGE Switch Setting	Initial NULL Switch Setting	Most Sensitive NULL Switch Setting
500 V	100 V	10 MV
50 V	10 V	1.0 MV
5 V	1 V	0.1 MV
0.5 V	100 MV	0.1 MV

TABLE 1. Recommended Null Sensitivities and Settings.

NOTE

The most accurate resistors in the Kelvin-Varley divider are in the first two Reference Voltage Dials. Therefore, to obtain the most accurate readings, use the first two dials as much as possible.

4. The value of the unknwon voltage is read directly from the Reference Voltage Dials.

a) The Dial reading will be within the specified limit of error if the NULL Switch is at the most sensitive setting (Table 1) for the range used and if the meter indicates as close to null as possible. Null does not have to be reached.

b) When the first Reference Voltage Dial is used, only the five Dials need be read to be within specifications (±0.02% of reading or 20 microvolts). However, the meter may be read as an approximation of a sixth digit.

c) When the first Reference Voltage Dial is not used, read the voltage directly from the remaining four Dials.

d) Use the meter as a null indicator when balancing voltages. When the first Reference Voltage Dial is not used, the meter approximates a fifth dial reading. However, the loading effect of Kelvin-Varley divider on the meter causes some quantitative inaccuracies when the meter is off null. (See paragraph 2-6.)

2-5. RECORDER OUTPUT.

a. Recommended recorders for use with the Model 660A are the F. L. Moseley Autograf 680 series recorder and the Minneapolis Honeywell recorder (10mv-0-10mv scale, 50 kilohms input resistance). Any recorder used must be able to float 500 volts off ground and its input must be fully isolated (10^{10} ohm minimum leakage resistance to ground).

b. Before attaching the recorder, set all Reference Voltage Dials to zero. Disconnect the unknown voltage and short both Model 660A input terminals. Set the NULL Switch to 10 MV. Connect the recorder to the OUTPUT terminals on the Model 660A rear panel.

c. Set the Reference Voltage Dials to 10 millivolts to apply an accurate 10-millivolt potential to the null detector on the 10-millivolt null range. This will provide a full-scale recorder output which can be matched to the recorder's range between 10 and 25 millivolts by adjusting the OUTPUT ADJUST Control.

d. To obtain accurate results and/or to prevent damage to the instruments, the recorder must be ablt to float off-ground with the Model 660A. Leakage and pickup between the two instruments should also be minimized.

1. Make sure neither recorder terminal is grounded. Use a 3-wire grounded power line for the recorder. If a 2-wire line is used, connect the recorder chassis and the Model 660A chassis with a separate lead.

2. Minimize all sources of leakage between the output terminals, the recorder and ground. Use polystyrene or Teflon-insulated wire where possible. If the connecting wires are shielded, connect the shield to the LO Post.

3. Avoid long leads between the Model 660A and the recorder.

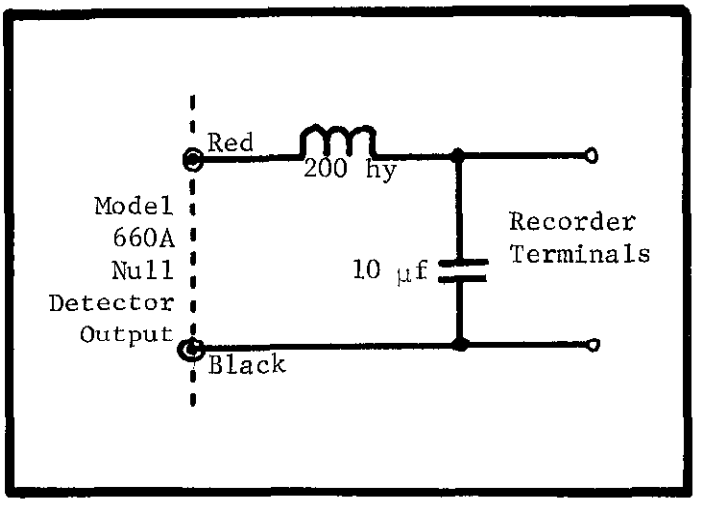

FIGURE 5. Recorder Filter. A filter between the Model 660A and the recorder may be necessary when using the 0.1-millivolt null detector range.

4. If difficulty is encountered in off-ground measurements, such as unstable readings, connect a 10-microfarad capacitor between the LO and GND terminals on the Model 660A front panel.

NOTE

Do not short either Model 660A output terminal to the case; this may damage the Kelvin-Varley divider.

e. If there is substantial recorder jitter on the 0.1-millivolt null range, place a filter between the Model 660A and the recorder. Refer to Figure 5 for this connection. Note the filter must also be insulated from ground.

2-6. EFFECTS DUE TO KELVIN-VARLEY OUTPUT RESISTANCE.

a. When the Model 660A is used for nulling on the 0.1-millivolt range, the last Reference Voltage Dial may appear to be inaccurate. The apparent error is due to a voltage drop across the Kelvin-Varley divider. This effect involves only the null detector sensitivity and not the accuracy of the Dial setting. When the Model 660A is as near to null as possible, the Reference Voltage Dial setting is correct within the instrument's specifications. There is no effect present at null.

b. The effect is most apparent on the 0.1, 1 and 10-millivolt null ranges. For example, on the 0.1-millivolt range a 0.1-millivolt off-null setting of the reference voltage will not produce a full-scale meter deflection. This is because the Kelvin-Varley divider output resistance is significant compared to the shunt resistance across the null detector meter. The IR drop across the divider will cause the meter to be off up to 6%, depending upon the Reference Voltage Dial settings. On the 100-millivolt range the maximum error is 1%. The effect cannot be observed on the other null ranges of the Model 660A.

c. The amount of deflection on the meter is equal to the ratio

$$\frac{R_n}{R_n + R_{kv}}$$

where R_n is the shunt resistance across the meter (50 megohms for the 100 to 1-volt null ranges, 10 megohms for the 100-millivolt range, and 1 megohm for the 10 to 0.1-millivolt ranges);

R_{kv} is the output resistance of the Kelvin-Varley divider, which is a maximum of 62.4 kilohms at Reference Voltage Dial settings of 2 4 5 4 5 and 2 5 4 5 5 and a minimum of 100 ohms at settings of 4 9 9 9 8 and 0 0 0 0 2.

2-7. LOADING AND OFF-NULL RESISTANCE.

a. The input resistance of the voltmeter for the seven null ranges varies from 50 to 1 megohm as given in Table 2. This resistance, however, is not the effective input resistance of the Model 660A. Its input resistance is considerably higher due to the potentiometric principle of operation. The value is given by

$$R_{in} = \frac{E_d R_n}{V} \qquad \text{Equation 1}$$

where R_{in} is the effective input resistance of the Model 660A;
E_d is the setting of the Reference Voltage Dials in volts;
R_n is the shunt or input resistance of the null detector meter in ohms;
V is the null detector meter reading in volts.

b. To find the loading effect the Model 660A will have on a circuit, use Equation 1 to compute the effective input resistance. At null, the input resistance is infinite. Off null, the input resistance is usually high compared to the internal resistance of the unknown voltage, and loading will not be enough to affect the measurement accuracy. For example, if the Reference Voltage Dials are set at 1.0000 volt on the 1-millivolt null range for a reading off null by 10% of full scale, the Model 660A input resistance is 10^{10} ohms.

Voltage Range	Input Resistance
500 volts	50 megohms
50 volts	50 megohms
5 volts	50 megohms
0.5 volts	50 megohms
Null Range	**Input Resistance (Slewing)**
100 volts	50 megohms
10 volts	50 megohms
1 volt	50 megohms
100 millivolts	10 megohms
10 millivolts	1 megohm
1 millivolt	1 megohm
0.1 millivolt	1 megohm

TABLE 2. Model 660A VTVM Input Resistance by Ranges. Resistance for Null Ranges is when the Reference Voltage Dials are set to zero.

2-8. THERMAL EMF PRECAUTIONS. Observe standard thermocouple techniques to reduce thermal emf errors for measurements using the most sensitive null ranges. Since the Model 660A can read to 2 microvolts, thermal emf's can introduce considerable errors into the measurements. In general, use pure copper leads throughout the system when measuring in the microvolt range. For extensive measurements in the microvolt region, request the article, DC Microvolt Measurements, from Keithley Instruments, Inc., or its representative.

2-9. AC EFFECTS ON MEASUREMENTS. To minimize errors from ac signals present in the unknown voltage, the Model 660A employs a chopper-stabilized null detector operating at a 42-cps chopping rate with a 3-section R-C filter at the input. Very large ac components on the measuring lines, however, may reduce off-null sensitivity. Also, heavy 60-cps pick-up will be observed as needle quiver. If ac components affect measurements by the Model 660A, additional filtering is required. For a single-frequency ac signal, a twin-T filter is effective. For a variable frequency signal, use an ordinary low-pass filter.

SECTION 3. APPLICATIONS

3-1. PROCEDURES FOR MEASURING RESISTANCES. The Model 660A can be used to rapidly measure resistances from 1 megohm to 100,000 megohms with an accuracy of ±5%. To measure resistance, connect the unknown resistor across the Model 660A HI and LO terminals. Use a short isolated lead to the HI terminal to prevent measuring leakage between the leads. Set the RANGE Switch to 500. Then determine the value of the resistor as follows:

a. For resistances between 1 megohm and 1000 megohms, set the NULL Switch to 10 volts; adjust the Reference Voltage Dials to obtain a full-scale meter deflection. Subtract 10.000 from the Dial setting and multiply the difference by 5 to obtain the value of the resistor in megohms.

b. For resistances between 1000 megohms and 10,000 megohms, set the NULL Switch to 1 volt; adjust the Reference Voltage Dials to obtain a full-scale meter deflection. Subtract 1.0000 from the dial setting and multiply the difference by 50 to obtain the value of the resistor in megohms.

c. For resistances between 10,000 megohms and 100,000 megohms, set the NULL Switch to 1 volt; adjust the Reference Voltage Dials to obtain a convenient deflection on the meter. Calculate the value of the resistor using,

$$R_x = \frac{50\ E_d}{V} \text{ megohms} \qquad \text{Equation 2}$$

Where R_x is the unknown resistance;
E_d is the Reference Voltage Dial setting in volts;
V is the meter reading in volts.

3-2. THEORY OF MEASURING RESISTANCES. The above method for determining the value of an unknown resistor is based upon the equation for the circuit. (See Figure 6). If an unknown resistance is across the Model 660A input terminals, then

$$E_d = i\ (R_x + R_n) \qquad \text{Equation 3}$$

Where E_d is the Reference Voltage Dial setting in volts;
i is the current in the circuit;
R_x is the unknown resistance;
R_n is the input resistance of the null detector meter in ohms.

The current can be written $i = V/R_n$, where V is the null detector meter reading in volts. Equation 3 now becomes

$$R_x = R_n \left(\frac{E_d}{V}\right) - R_n \qquad \text{Equation 4}$$

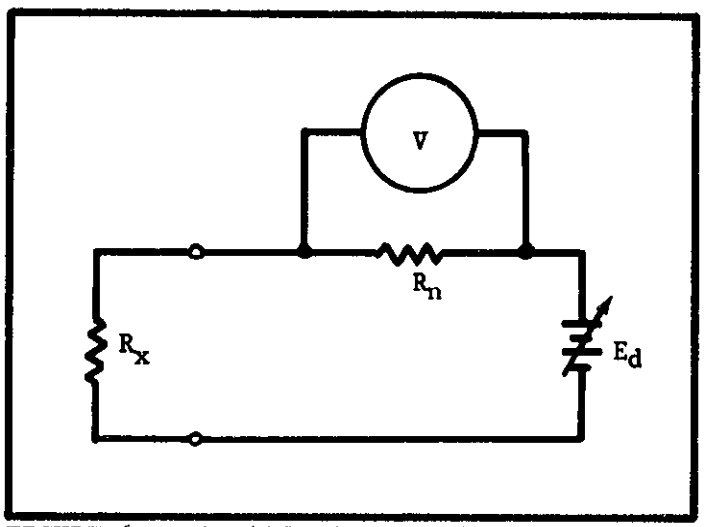

FIGURE 6. Simplified Model 660A Circuit for Measuring Resistances. R_x is the unknown resistance. R_n is the input resistance of the null detector; V is the null detector; E_d is the buckout voltage.

If measurements are made on the 1 to 100-volt null ranges, the input resistance, R_n, is 50 megohms. Equation 4 becomes

$$R_x = 5 \times 10^7 \left(\frac{E_d}{V} - 1 \right) \qquad \text{Equation 5}$$

This is the basis for simplified calculations in paragraph 3-1.

SECTION 4. CIRCUIT DESCRIPTION

4-1. GENERAL. The Model 660A Differential Voltmeter measures voltage by the potentiometric (null) method. The variable known voltage is an ultra-stable 500-volt reference supply used in conjunction with a precision multi-dial Kelvin-Varley divider. Electronic referencing of the 500-volt output to a zener diode standard maintains the reference supply's stability and accuracy. This method eliminates repeated manual standardization. The difference between the divider output and the unknown voltage is indicated by the null detector, a chopper-stabilized vacuum-tube voltmeter. At null the unknown voltage can be read directly from the in-line dials of the Kelvin-Varley divider. The input and null detector are fully guarded to avoid leakage.

NOTE

Refer to Schematic Diagram 18269E for circuit designations.

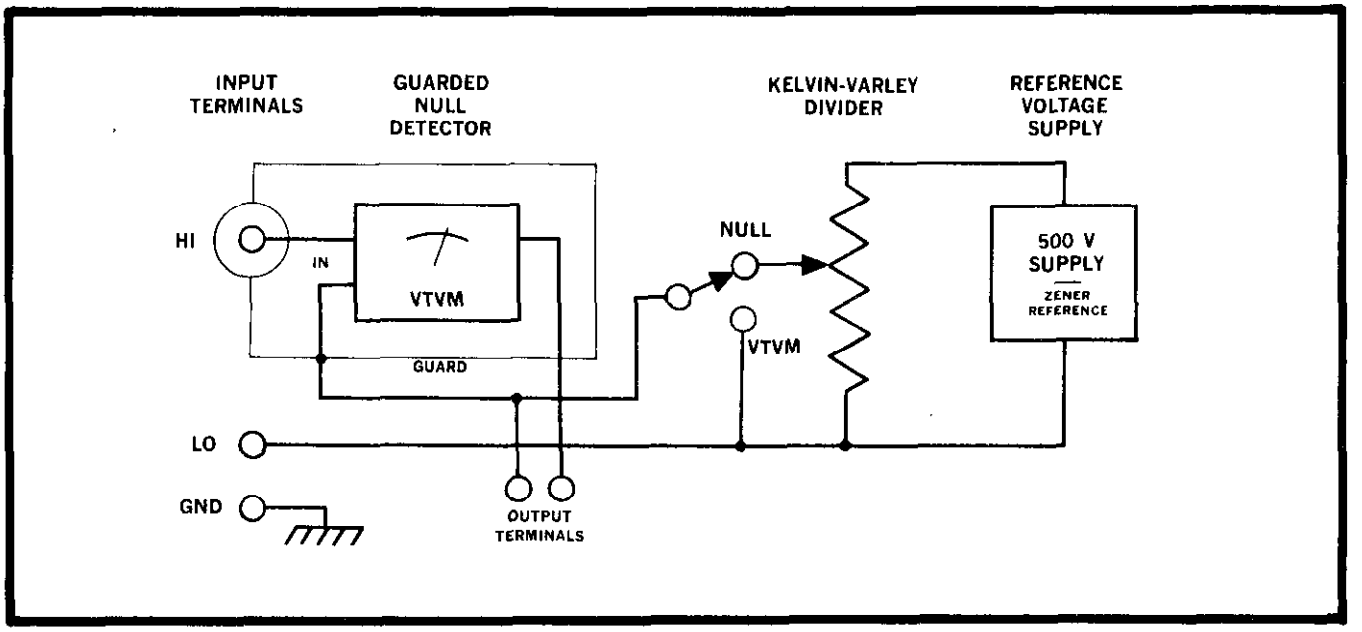

FIGURE 7. Simplified Model 660A Circuit Diagram.

4-2. REFERENCE VOLTAGE SUPPLY.

a. Unregulated voltage from transformer T3001 is rectified by a silicon half-wave rectifier, D3001, and is filtered by capacitors C3001 and C3002. The voltage then is applied to the regulator series pass tube, V3004. Regulator tube V3005 is used to keep the screen of V3004 at a constant potential.

b. To obtain a stable, accurate voltage, the 500-volt output of V3004 is sampled by a divider network of wirewound resistors, R3023 to R3028. The divider network ratio is adjusted with potentiometer R3025 to better than 0.01%. Light modulator E3002 compares the sample voltage from the divider network to the voltage across zener diode, D3003. Any difference between the two voltages is chopped by E3002 and amplified by a 2-stage ac-coupled

amplifier, V3001. The amplified output of V3001 is converted to a dc signal by light modulator E3001 and then is amplified by the two-stage differential dc amplifier, V3002 and V3003. The amplifier output is applied to the grid of the series tube, V3004, to nullify input variations. Capacitor C3004 is used in the ac feedback circuit.

c. The temperature-compensated zener diode, D3003, is used as the basic reference since typical variations are limited to less than 20 ppm per year and 5 ppm per °C. Thus, a highly stable reference which eliminates manual standardization is provided with respect to both time and temperature. The zener diode will also withstand shock and vibration.

d. The regulated 500-volt output of V3004 is either applied directly to the Kelvin-Varley divider or it is divided to 50, 5 or 0.5 volts by very stable wirewound resistor networks. The RANGE Switch, S3008, determines which network is used. The 50-volt range divider consists of resistors R3030, R3032 and R3033; the 5-volt, of R3030, R3035 and R3036; and the 0.5-volt of R3030, R3038 and R3039. Using potentiometers R3032, R3035 and R3038 accurately sets the voltage division on each range.

4-3. KELVIN-VARLEY DIVIDER.

a. The Kelvin-Varley divider precisely divides the reference voltage for nulling an unknown voltage. It is, in effect, a constant input impedance decade potentiometer, consisting of resistors R3040 through R3088. The resistors within each decade are matched; the decades are matched for each instrument.

b. Each decade of the Kelvin-Varley divider, except the first, R3040 through R3045, parallels two resistors of the preceeding string. Between the two contacts of the first Reference Voltage Switch, S3003, the total resistance is 40 kilohms (80 kilohms in parallel with the 80 kilohms total resistance of the four remaining strings). With the RANGE Switch set at 500, 100 volts dc will appear across the contacts of Reference Voltage Switch S3004, 10 volts across S3005, 1 volt across S3006, and 0.1 volt across S3007.

4-4. NULL DETECTOR. The Model 660A uses a null detector with a chopper stabilized, feedback amplifier. The input signal is attenuated, if necessary, and sent through a three-stage R-C filter. The signal is then amplified and applied to the meter.

a. The null detector has three full-scale sensitivities, 0.1, 1 and 10 millivolts. Above the 10-millivolt range, the input is divided by resistors R1004 through R1009 to the 10 millivolts. The full-scale sensitivities are determined by one of three feedback resistors, R1040 to R1042, in the circuit. A three-stage R-C filter, consisting of R1010, R1011, C1003, R1012, C1004, R1018 and C1005, is used to decrease the ac input components.

b. The light modulators E1001 and E1002 convert the difference between the filtered input voltage and the output of the Kelvin-Varley divider into an ac voltage, which is fed to a four-stage ac coupled amplifier, V1001 and V1002. The amplifier output is then demodulated by light modulator E1003 and filtered by capacitor C1019. The null detector meter, M1001, indicates the value of the filtered signal. A 42-cps oscillator drives the light modulators. Using a drive source harmonically unrelated to the standard line frequency minimizes 60-cps pickup effects.

c. One arm of the feedback network is formed by resistors R1043 to R1046, and one of the feedback range resistors, R1040 to R1042. Resistor R1039 forms the second shunt arm. The feedback is applied to light modulator E1002.

d. A zero-control network is used to buck out thermal emf's at the input on the two most sensitive ranges. The network consists of a 1.34-volt mercury battery, BT1001, and resistors R1013 through R1016. The zero control on the front panel, R1016, has approximately a 60-microvolt span.

e. The null detector output is obtained across resistors R1045 and R1046, which are in the feedback network. Potentiometer R1045 adjusts the output from 10 to 25 millivolts at full scale. The output voltage is proportional to the full-scale meter reading.

4-5. GUARDING. Guarding is accomplished by floating the null detector and the input circuitry at a voltage equal to the input voltage from a low impedance source. This full guarding eliminates leakage between the input terminal and ground. Such leakage in an unguarded circuit is difficult to avoid, under laboratory conditions, and can result in sizeable errors. For example, in an unguarded circuit with a 1-megohm source, leakage of 10^8 ohms will introduce 1% error. A guarded circuit eliminates this element of error. The effectiveness of guarding in the Model 660A is demonstrated by setting the null detector on the 0.1-millivolt range, with the input circuit open, and Reference Voltage Dials set to 500 volts. Even at this extreme condition there is no deflection on the meter, demonstrating there is no leakage.

SECTION 5. SERVICING

5-1. GENERAL. Section 5 contains the maintenance and troubleshooting procedures for the Model 660A. Follow these procedures as closely as possible to maintain the accuracy and stability of the instrument.

5-2. SERVICING SCHEDULE. The Model 660A needs no periodic maintenance beyond the normal care required of high-quality electronic equipment. No part should need replacement under ordinary use except a pilot lamp, fuse or, occasionally, a vacuum tube.

5-3. PARTS REPLACEMENT.

a. The Replaceable Parts List in Section 8 describes the electrical components in the Model 660A. Replace components only as necessary, and use only reliable replacements which meet the specifications.

b. Replace resistors within any one of the first three Kelvin-Varley divider decades only as an assembly. Refer to the Replaceable Parts List for the part number for resistors R3040 to R3067. Resistors R3023, R3024, R3026, R3033, R3036 and R3039 are also parts of assemblies. Reorder using the Keithley part number (see Section 8) and replace all resistors in the assembly. Because of its importance in maintaining the power supply stability, order zener diode D3003 only from Keithley Instruments, Inc., or its representative. Refer to paragraph 5-6 for instructions to replace the zener.

5-4. TROUBLESHOOTING.

a. The following procedures are for repairing troubles which might occur in the Model 660A. Use these procedures to troubleshoot and use only specified replacement parts. Table 3 lists equipment recommended for troubleshooting. If the trouble cannot be readily located or repaired, contact Keithley Instruments, Inc., or its representative.

b. Paragraph 7-2 describes how to remove the Model 660A cover. Before proceeding with the troubleshooting, check the vacuum tubes. Normally, replacing tubes will clear up the difficulty. All tubes can be readily tested on a grid-modulated tube tester. If replacing a tube does not correct the trouble, continue the procedures. Replacing tubes does not necessitate recalibration of the instrument.

c. Table 4 contains the more common troubles which might occur. If the repairs indicated in the Table do not clear up the trouble, the difficulty will have to be found through

Instrument	Use
Tektronix Type 503 Oscilloscope	Check wave forms
dc voltmeter, 10% accuracy, minimum 100-megohm input resistance, 1 volt to 500 volts	Circuit checking
Grid-modulated tube tester	Test vacuum tubes

TABLE 3. Equipment Recommended for Model 660A Troubleshooting. Use these instruments or their equivalents.

Difficulty	Probable Cause	Solution
Needle quiver	R1048 is out of adjustment	Adjust per paragraph 5-5
Meter rattle, drift or error is observed on all null ranges	Tube V1001, V1002 or V2001 is faulty	Check tubes; replace if faulty
Line voltage variations cause measurements to be out of specifications	Tube V3005 is defective	Check tube; replace if faulty
Reference voltage supply drifts after 30-minute warm-up, requiring frequent adjusting of the range controls, R3025, R3032, R3035, R3038	V3001, V3002, V3003 or V3007 is defective	Check tubes; replace if fualty
	One of the divider resistors, R3023 to R3028, is changing value rapidly during warm-up.	Return the instrument for factory check-out
	Zener diode, D3003, is unstable	Return the instrument for factory check-out
	Light modulator E3002 is defective	Check light modulator by replacing
Measurements out of tolerance on all ranges	Out of calibration	Refer to paragraph 6-4 for recalibration
	One of the divider resistors, R3023 to R3028, is faulty	Return the Instrument for factory check-out
Measurements are out of specifications on one range other than 500-volt range	Resistor in the range divider network is faulty	Paragraph 4-2 d points out the resistors used for each range. Try to bring the ranges within specifications by calibrating with the potentiometers in the network. See paragraph 6-4. If this does not work, check individual resistors.
Measurements are out of specifications on all ranges other than 500-volt range	Resistor R3030 is faulty	Replace the faulty resistor

TABLE 4 (Sheet 1). Model 660A Troubleshooting.

Difficulty	Probable Cause	Solution
Measurements are out of specifications on any range when the Reference Voltage Dials are at any setting other than 4 9 9 9 10	One of the Kelvin-Varley divider resistors is faulty	See paragraph 6-3
Instrument is out of specifications on all null ranges above 10 millivolts	Resistor R1003 is faulty	Check resistor; replace if faulty

TABLE 4 (Sheet 2). Model 660A Troubleshooting.

a point-by-point check of the circuits. Refer to the circuit description in Section 4 to find the more crucial components and to determine their function in the circuit. The complete circuit schematic, 18269E, is found in Section 8.

5-5. ADJUSTING HUM BAL CONTROL.

a. Potentiometer R1048 (Figure 18) minimizes 60-cps pickup in the null detector. Misadjustment will reduce sensitivity and cause needle quiver.

b. To adjust the potentiometer, set the Reference Voltage Dials to zero and short the input terminals. Attach an oscilloscope to the junction of capacitor C1016 and resistor R1035 (from pin 6 of V1002). Figure 8 shows the wave form if potentiometer R1048 is adjusted for minimum output.

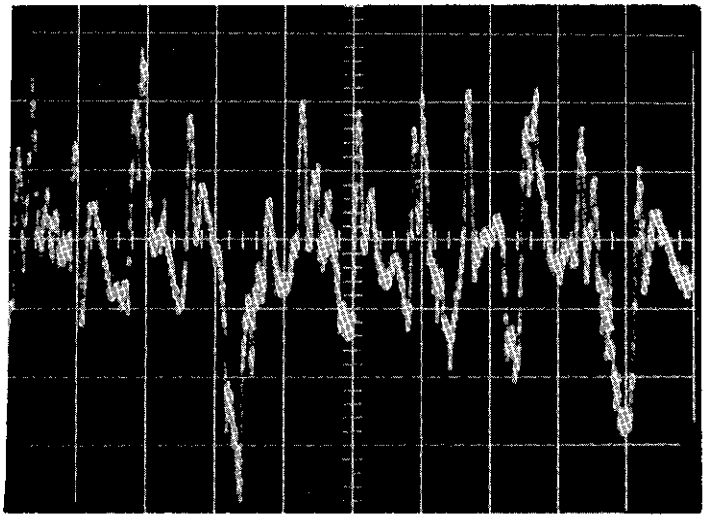

FIGURE 8. Wave Form with R1048 Adjusted. A Type 503 Oscilloscope was used; horizontal sweep was 20 msec/cm; vertical, 500 mv/cm.

5-6. ZENER DIODE REPLACEMENT. Zener diode, D3003, is a reference for the voltage divider, resistors R3023 to R3028. The values of resistors R3027 and R3028 (Figure 20) are determined by the reference voltage across diode D3003. When the zener is replaced, the value of these two resistors may have to be changed.

5-7. METER ADJUSTMENT.

a. Potentiometer R1043 (Figure 18) is the internal meter sensitivity adjustment. It sets the current through the meter to indicate a full-scale deflection for a full-scale applied voltage.

b. Warm up the Model 660A for 30 minutes. Set the NULL Switch on the 0.1 millivolt range, and set the Reference Voltage Dials to .00010. Adjust potentiometer R1043 until the meter reads full scale.

SECTION 6. CALIBRATION

6-1. GENERAL.

a. The following procedures are recommended for calibrating the Model 660A. Use the equipment recommended in Table 5. If proper facilities — especially important for calibrating an ±0.02% instrument — are not available or if difficulty is encountered, contact Keithley Instruments or its representative to arrange for factory calibration.

b. Four procedures are covered: Kelvin-Varley divider verification, voltage range calibration, reference voltage supply stability test and oscillator adjustment.

c. If the Model 660A is not within specifications after the calibration, follow the troubleshooting procedures or contact Keithley Instruments, Inc., or its representative.

Instrument	Use
Electro Scientific Industries Model SV194B Voltage Calibrator, ±0.005% accuracy with corrections on certificate	Range voltage calibration
Electro Scientific Industries Model RV722 Decade Voltage Divider; terminal linearity, ±1 ppm; certificate corrected to ±0.2 ppm	Voltage divider for range calibration
Electro Scientific Industries Model LC875B Lead Compensator	Range voltage calibration
Hewlett-Packard Model 200CD Oscillator	Monitor oscillator frequency
Keithley Instruments Model 150A Microvoltmeter	Null detector for range calibration
Keithley Instruments Model 241 Regulated High Voltage Supply	Voltage supply for range calibration
Keithley Instruments Model 662 Guarded dc Differential Voltmeter	Check voltages in Kelvin-Varley divider
Mosley Instruments Model 680 Direct Reading Recorder	Recorder for reference voltage supply stability
Tektronix Type 503 Oscilloscope	Check wave forms
Weston Instruments Model 3 Type 7 Saturated Standard Cell	Range calibration and reference voltage supply stability
Weston Instruments Model 66 Oil Bath	Range calibration and reference voltage supply stability

TABLE 5. Equipment Recommended for Model 660A Calibration. Use these instruments or their equivalents.

Control	Circuit Desig.	Fig. Ref.	Refer to Paragraph
Meter Calibrate	R1043	18	5-7
Hum Balance	R1048	18	5-5
Oscillator	R2007	20	6-6
500-volt Calibrate	R3025	20	6-4
50-volt Calibrate	R3032	20	6-4
5-volt Calibrate	R3035	20	6-4
0.5-volt Calibrate	R3038	20	6-4

TABLE 6. Model 660A Internal Controls. The Table lists all internal controls, the figure picturing the location and the paragraph describing the adjustment.

6-2. CALIBRATION SCHEDULE.

a. Recalibrate the Model 660A yearly. This normally means performing the voltage range calibration (paragraph 6-4). The other verifications need not be done.

b. Verify the Kelvin-Varley divider (paragraph 6-3) only if trouble is suspected in it, or if components in the divider have been replaced. Also make the voltage range calibration after verifying the divider accuracy.

c. Check the reference voltage supply stability (paragraph 6-5) only if trouble is suspected in the supply or if some of its components have been replaced.

6-3. KELVIN-VARLEY DIVIDER VERIFICATION.

a. There is no in-field calibration for the Kelvin-Varley divider; its accuracy can only be verified. The divider accuracy depends upon matching resistors and switches. At manufacture, each resistor within the first two Reference Voltage switches, S3003 and S3004, is matched to 0.005%. The resistors in the switches are checked as a set to an accuracy of better than 0.005%. Individual resistors cannot be replaced without rematching the string at Keithley Instruments.

b. Kelvin-Varley Divider Accuracy Verification Procedures.

1. Use the Model 662 Differential Voltmeter or equipment with better limit of error to match the Model 660A under test. Connect the wiper arm of Switch S3007 of the instrument under test to the HI terminal of the Model 662. Connect both LO terminals.

NOTE

Be careful of high voltages when working within the Model 660A. Up to 800 volts dc is present at various points.

2. Set the dials to random settings on both instruments. Settings should match to ±0.02%. This procedure, however, only indicates the Kelvin-Varley divider accuracy. The errors of the two instruments may be additive, causing a false verification. The most accurate way is to use standard procedures for checking a Kelvin-Varley divider or to return the Model 660A to Keithley Instruments, Inc., for checking.

3. If any resistor fails to test out, the entire divider string will have to be rematched at the factory.

6-4. RANGE CALIBRATION.

a. The reference voltage supply has a 500-volt output which can be attenuated to 50, 5 or 0.5 volts. This voltage is then divided by the Kelvin-Varley divider to provide the accurate buckout voltage. Each of the four voltage ranges is set by internally adjusting potentiometers R3025, R3032, R3035 and R3038 (Figure 20).

b. The ranges are calibrated by applying an accurate voltage to the Model 660A for each setting of the RANGE Switch. The Model 660A is set to furnish the equivalent buckout voltage, and the internal range potentiometer is adusted until the voltmeter indicates a null.

NOTE

The accuracy of the Model 660A calibration will be no greater than the accuracy of the voltage source used for calibrating. Unless the user is familiar with techniques for obtaining accuracy greater than 0.002% (20 ppm), it is better to return the Model 660A to the factory for range calibration.

c. The most critical part in range calibration is establishing a reference source whose accuracy exceeds 0.002%. Use the Model SV194B Voltage Calibrator for the 500, 50, 5 and 0.5-volt outputs. Establish the accuracy of these outputs by determining the cor-

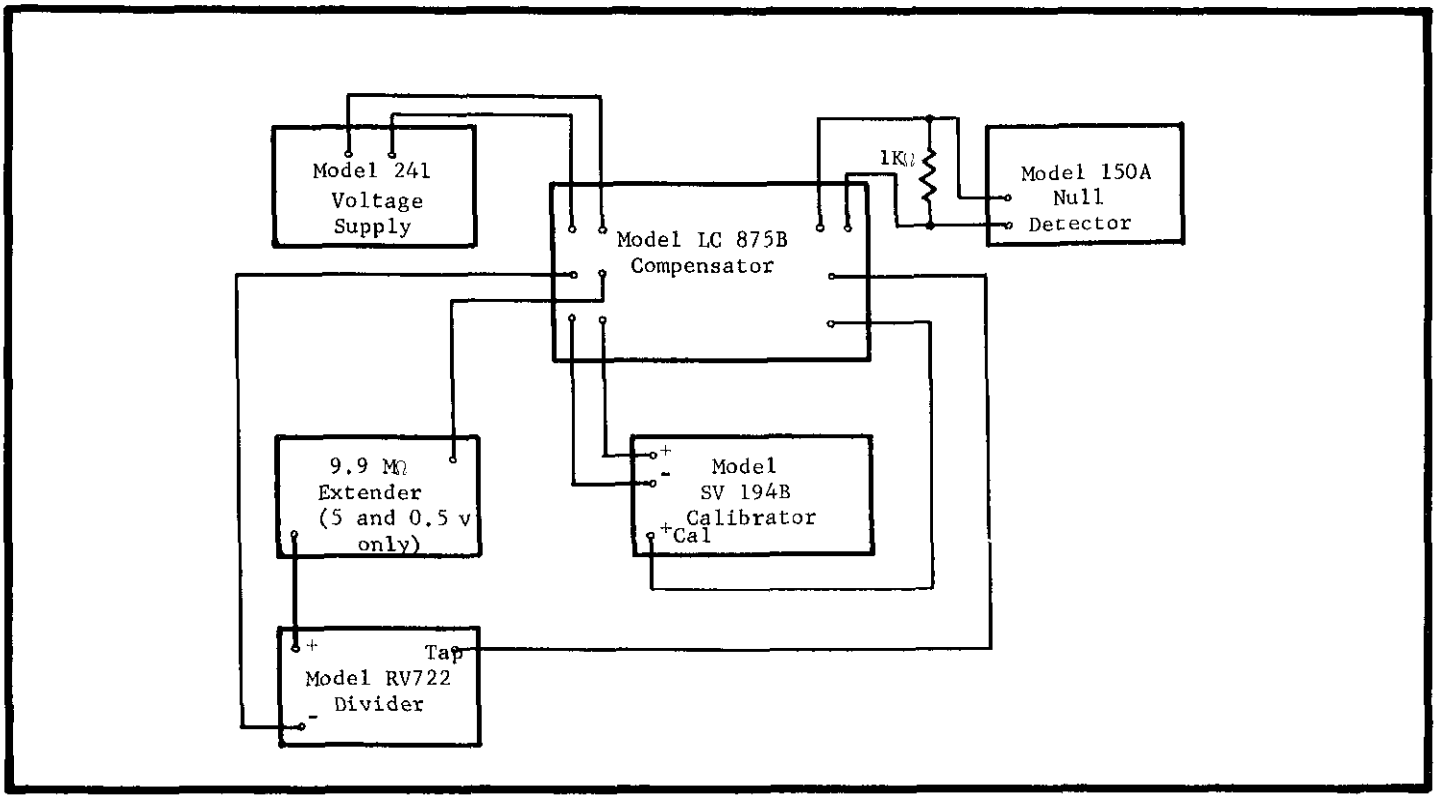

FIGURE 9. Block Diagram to Establish System Accuracy for Model 660A Range Calibration. Fully guard the entire system to prevent leakage errors. Use a 1-kilohm copper resistor to shunt the null detector. See Table 5 for recommended equipment.

rections for the calibrator's CALIBRATION and OUTPUT dials at these outputs. The system's accuracy can be determined to approximately 10 ppm. Added to the accuracy of the standard cell, total accuracy should be approximately 12 ppm. Note that this depends upon properly executed procedures.

d. Procedures to Establish System Accuracy.

1. Set up the system shown in Figure 9. Use the 9.9-megohm extender for only the 0.5 and 5-volt outputs.

2. Establish the corrections for the CALIBRATION dial setting for Model SV194B outputs of 500, 50, 5 and 0.5 volts. Set the Model 241 Voltage Supply to 500 volts. Set the Model RV772 Divider to a voltage equal to that of the standard cell. Adjust the Model SV194B ratio dial until the null detector indicates a null. The difference between the settings of the Model RV772 Divider and the ratio dial is the Model SV194B correction factor at 500 volts. With this correction, the 500 volts may be set to within approximately 12 ppm.

3. Connect the null detector to the 50, 5 and 0.5-volt taps of the Model SV194B Calibrator in that order. Set the Model RV722 Divider to corresponding voltages. Use the 9.9-megohm extender for the 5 and 0.5-volt outputs. (See Figure 9.) The difference read on the null detector is the correction factor for each of the three voltages. These voltage may also be set to within 12 ppm.

4. Use the four correction factors for calibrating the Model 660A range settings.

e. Procedures for Range Calibration.

1. Set up the system shown in Figure 10. The standard cell should be certified to 10 ppm. Use the dial correction factors found for each output. If the system accuracy was properly determined, the input voltage to the Model 660A should be correct to 20 ppm.

2. 500-volt Range Calibration: Set the Model 660A controls as follows:

RANGE Switch	500
Reference Voltage Dials	4 9 9.9 10
NULL Switch	VTVM
POLARITY Switch	+

Adjust the Voltage Calibrator to apply 500 volts dc to the Model 660A. Turn the Model 660A NULL Switch to 10 MV and adjust the 500 V CAL potentiometer, R3025 (Figure 20), for null on the Differential Voltmeter.

3. 50-volt Range Calibration: Set the Model 660A controls as follows:

RANGE Switch	50
Reference Voltage Dials	4 9.9 9 10
NULL Switch	10 MV
POLARITY	+

Adjust the Voltage Calibrator to apply 50 volts dc to the Model 660A. Adjust the 50 V CAL potentiometer, R3032 (Figure 20), for an off-null reading on the Model 660A equal to the correction factor at 50 volts.

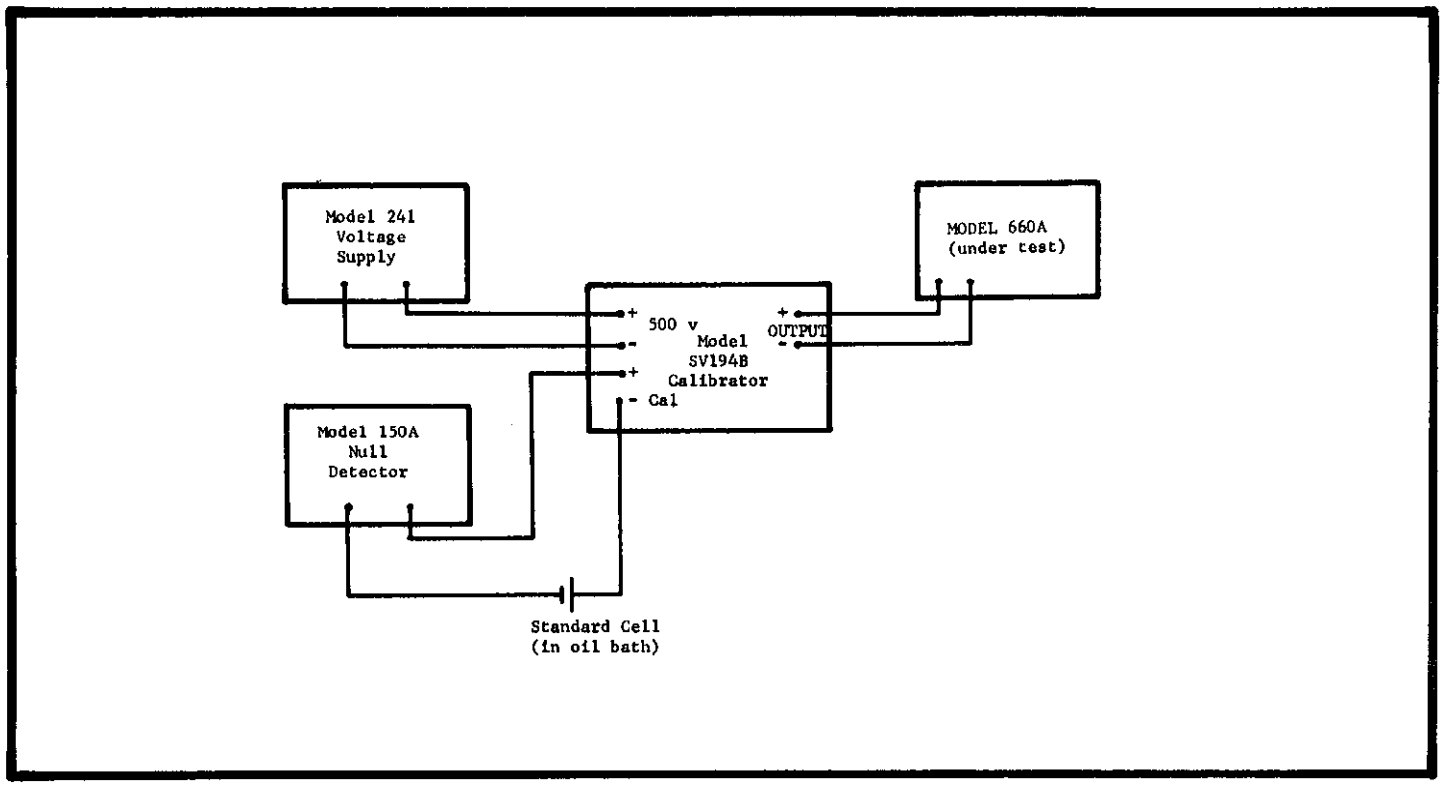

FIGURE 10. Block Diagram for Model 660A Range Calibration. Fully guard the entire system to prevent leakage errors. See Table 5 for recommended equipment.

4. 5-volt Range Calibration: Set the Model 660A controls as follows:

RANGE Switch	5
Reference Voltage Dials	4 .9 9 9 10
NULL Switch	1 MV
POLARITY Switch	+

Adjust the Voltage Calibrator to apply 5 volts dc to the Model 660A. Adjust the 5 V CAL potentiometer, R3035 (Figure 20), for an off-null reading on the Model 660A equal to the correction factor at 5 volts.

5. 0.5-volt Range Calibration: Set the Model 660A controls as follows:

RANGE Switch	0.5
Reference Voltage Dials	.4 9 9 9 10
NULL Switch	0.1 MV
POLARITY Switch	+

Adjust the Voltage Calibrator to apply 0.5 volt dc to the Model 660A. Adjust the 0.5 V CAL potentiometer, R3038 (Figure 20), for an off-null reading on the Model 660A equal to the correction factor at 0.5 volt.

6-5. REFERENCE VOLTAGE SUPPLY STABILITY TEST.

a. The reference voltage supply, consisting of the power transformer and the main supply (printed circuit PC92), is factory calibrated for an output of 500 volts dc ±0.002%. The 500-volt output is adjustable to meet specifications. If the stability of the supply

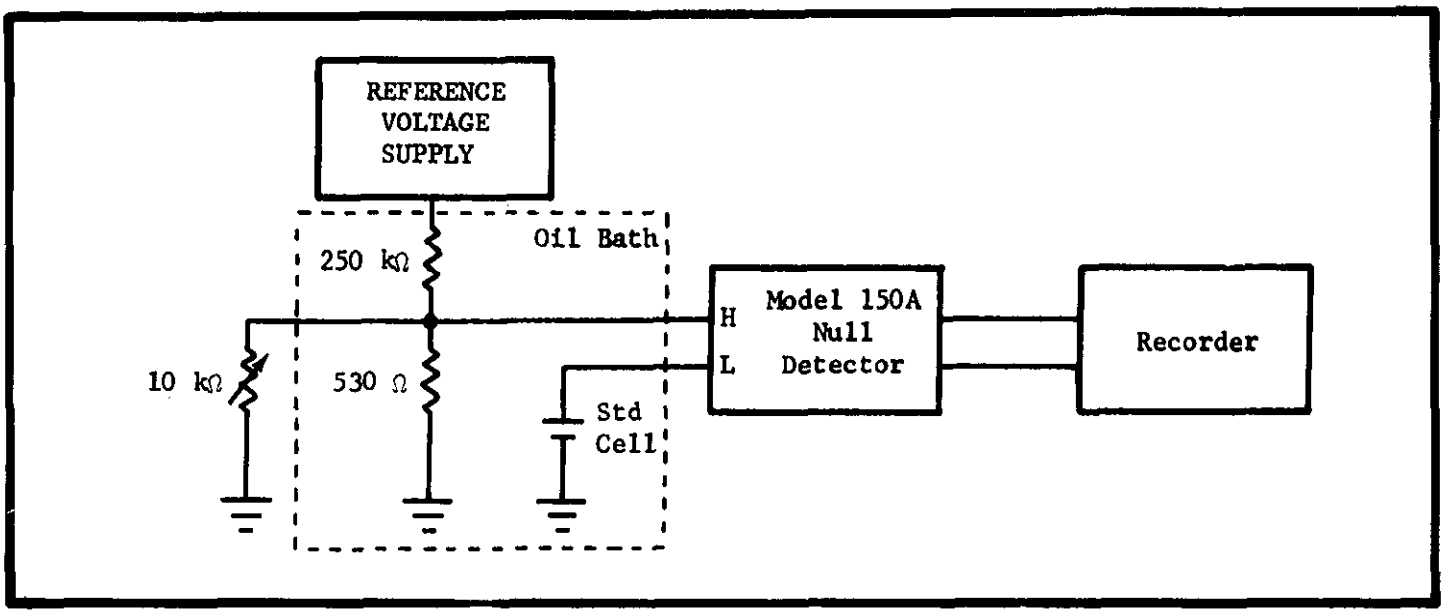

FIGURE 11. Circuit Diagram for Model 660A Reference Voltage Supply Stability Test. The voltage across the 530-ohm resistor is slightly higher than the standard cell. Use the 10-kilohm potentiometer to shunt the divider voltage down. All resistors are wirewound. See Table 5 for recommended equipment.

is not within specifications, then troubleshoot for a faulty component.

b. Routine calibration of the Model 660A does not require a stability test of the reference voltage supply. However, a stability test is recommended if one of the components in the supply is replaced.

c. For the 24-hour test, the 500-volt output of the reference voltage supply is divided and compared to a 1.02-volt saturated standard cell using a sensitive null detector. Variations between the reference voltage supply and the standard cell are detected by the Model 150A and are recorded on a recorder. Refer to Figure 11 for the block diagram of the test circuit.

d. In using the test circuit, the following points are important.

1. Saturated standard cells, though extremely stable with time, have a high temperature coefficient and require a controlled environment during use. Therefore, the Weston Oil Bath, which is maintained at +35°C ±0.01°C, is used for the test. Unsaturated standard cells have a lower temperature coefficient, but they do not have the long term stability required for this test.

2. The resistor divider network is constructed from wire of the same spool for an extremely close temperature coefficient match (4 ppm, typically). Additional stability results when the resistors are immersed in an oil bath to hold the ambient temperature variations to ±0.01%.

e. Procedures for the Reference Voltage Supply Stability Test.

1. After the saturated standard cell and the resistor divider network are placed in the oil bath, allow sufficient time for the cell to stabilize at +35°C. (Consult Keith-

ley Instruments, Inc., or its representative for details.) Connect the standard cell to the circuit after turning on the 500-volt supply. Set the Model 660A controls as follows:

RANGE Switch	500
Reference Voltage Dials	4 9 9.9 10
NULL Switch	10 MV
POLARITY Switch	OFF

Connect the resistor divider network across the Model 660A's reference voltage supply, the positive side of the divider input to the wiper arm of the last Reference Voltage Switch, S3007, and the negative side of the divider to the LO terminal on the Model 660A front panel.

2. Connect the Model 150A and the recorder as shown in Figure 11. Set the Model 150A to the 3-volt range. Advance the Model 660A POLARITY Switch to + to put 500 volts across the divider. If the Model 150A reads two volts, the standard cell and the divider voltages are improperly connected in series. If the circuit is correct, the Model 150A will read zero. Increase the Model 150A's sensitivity to the 0.1-millivolt range. If it reads more than 20 microvolts, adjust the 500 V CAL potentiometer, R3025 (Figure 20), shunting the divider.

NOTE

Any adjustment of potentiometer R3025 requires all other ranges to be calibrated.

3. After a 1-hour warm-up, the drift of the entire system should not exceed ±50 microvolts in 24 hours (Figure 12).

6-6. OSCILLATOR ADJUSTMENT.

a. The oscillator circuit drives the light modulators. Before adjusting the oscillator, make sure the reference voltage supply is operating correctly.

b. Connect the Type 503 Oscilloscope Vertical Input to the plate and low side of tube V2001 (Figure 19) and the Horizontal Input to the Model 200CD Oscillator. Adjust the oscillator frequency to approximately 42 cps with potentiometer R2007 (Figure 20). The Model 660A oscillator is then adjusted for minimum meter noise — normally within a cycle of 42 cps. Disconnect the Oscilloscope before adjusting potentiometer R2007. The Oscilloscope will cause a small loading error.

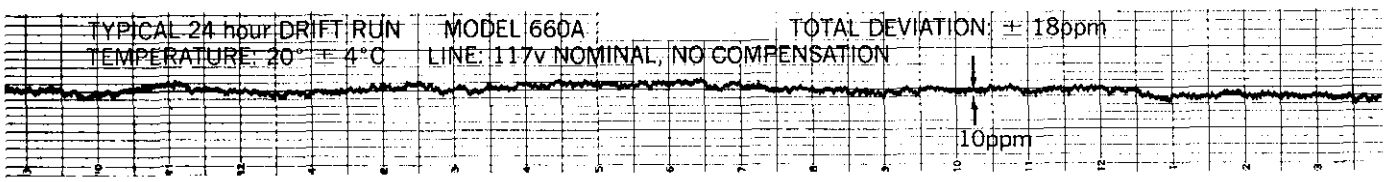

FIGURE 12. Stability Strip Chart for Model 660A Reference Voltage Supply. The chart covers over 15 hours. Fluctuations are well within ±0.005%. Note drift is non-cumulative. No compensation for variations of line voltage or other conditions was made.

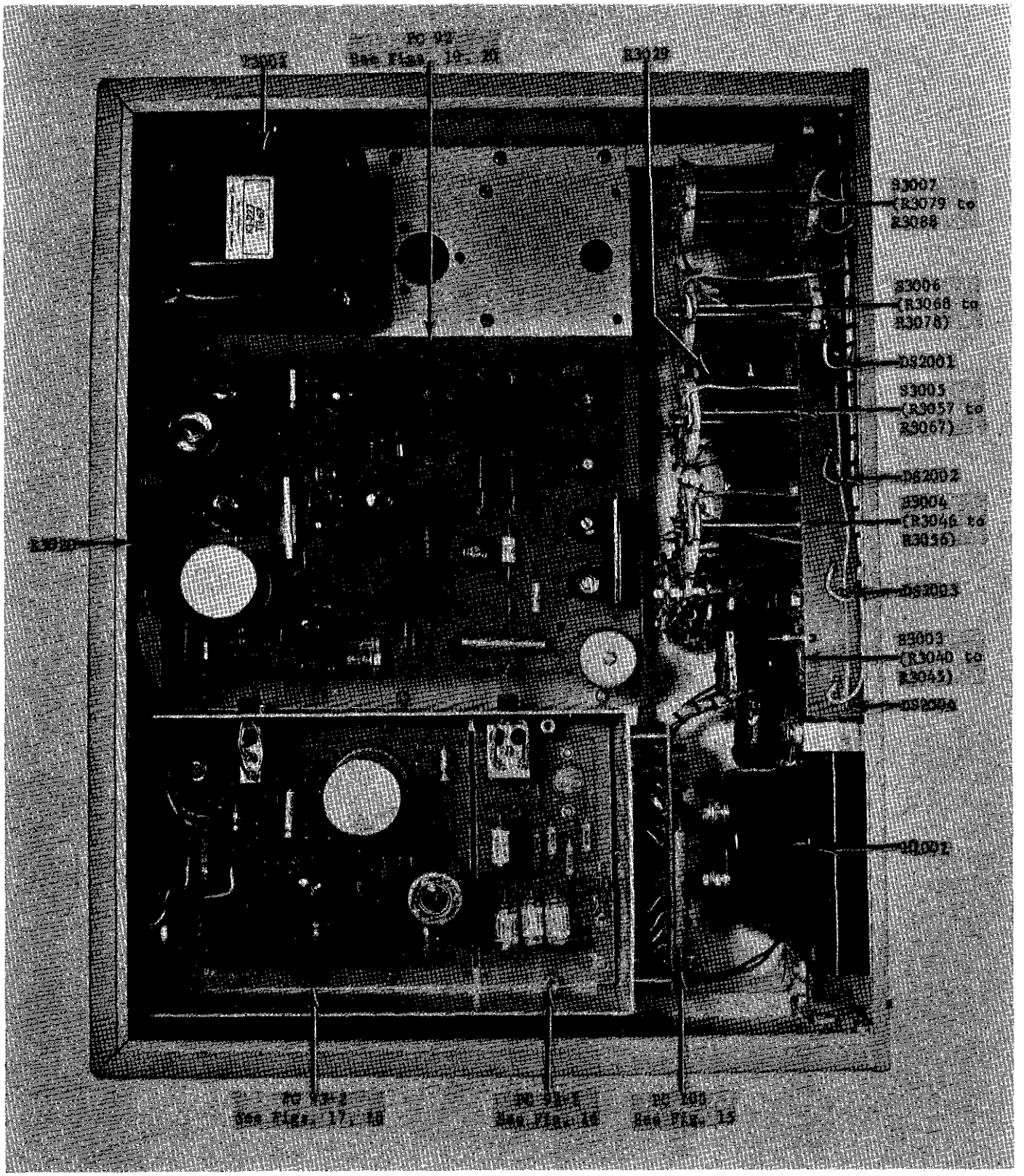

FIGURE 13. Top View of Model 660A Chassis. Front panel faces to the right. Location of components, printed circuits and switches is shown. Refer to the Replaceable Parts List for circuit designations. Figure 14 shows the bottom view.

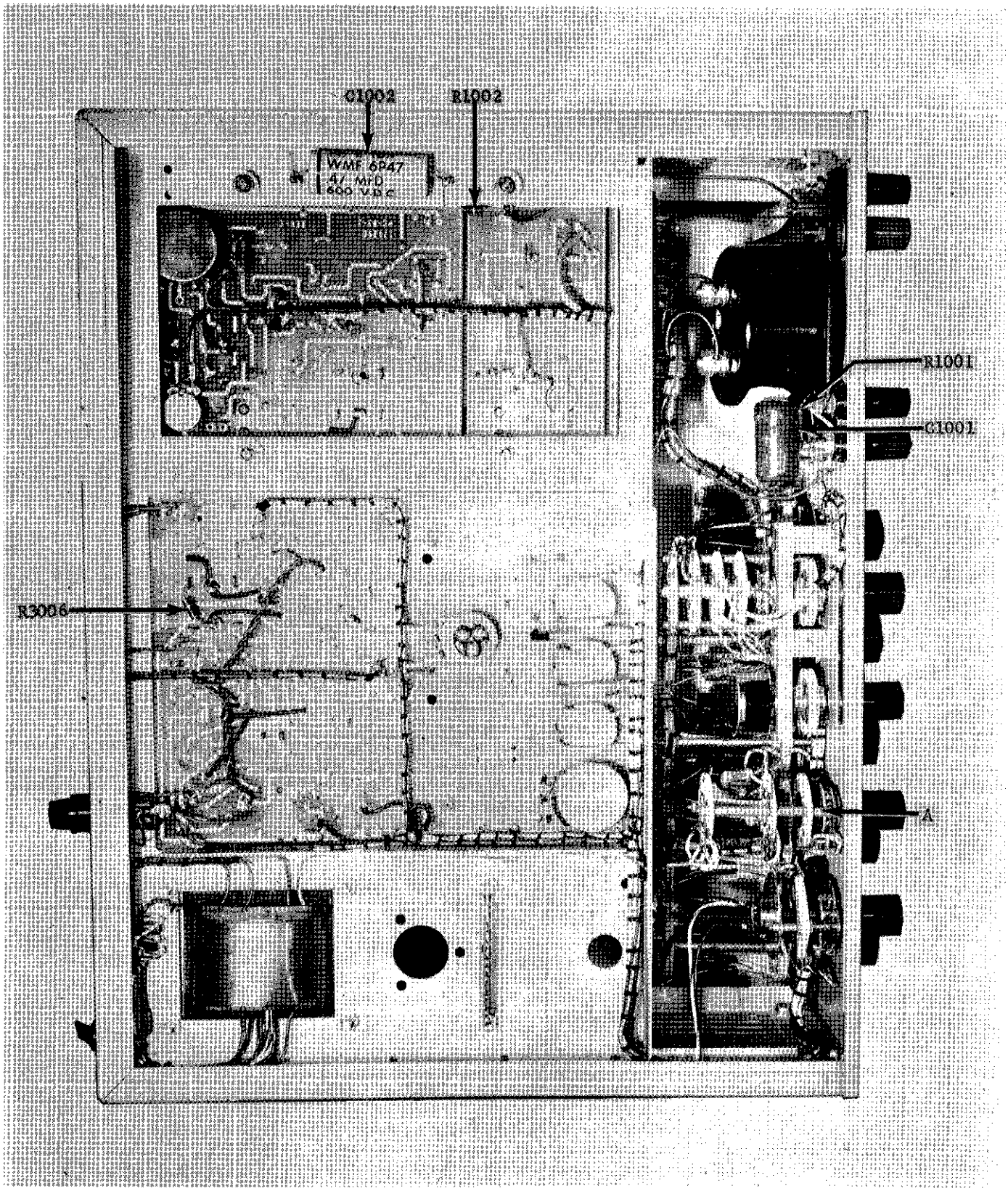

FIGURE 14. Bottom View of Model 660A Chassis. Front panel faces to the right. Reference A in the photograph designates the location of resistors R3031, R3033, R3034, R3036, R3037 and R3039. Figure 13 shows the top view.

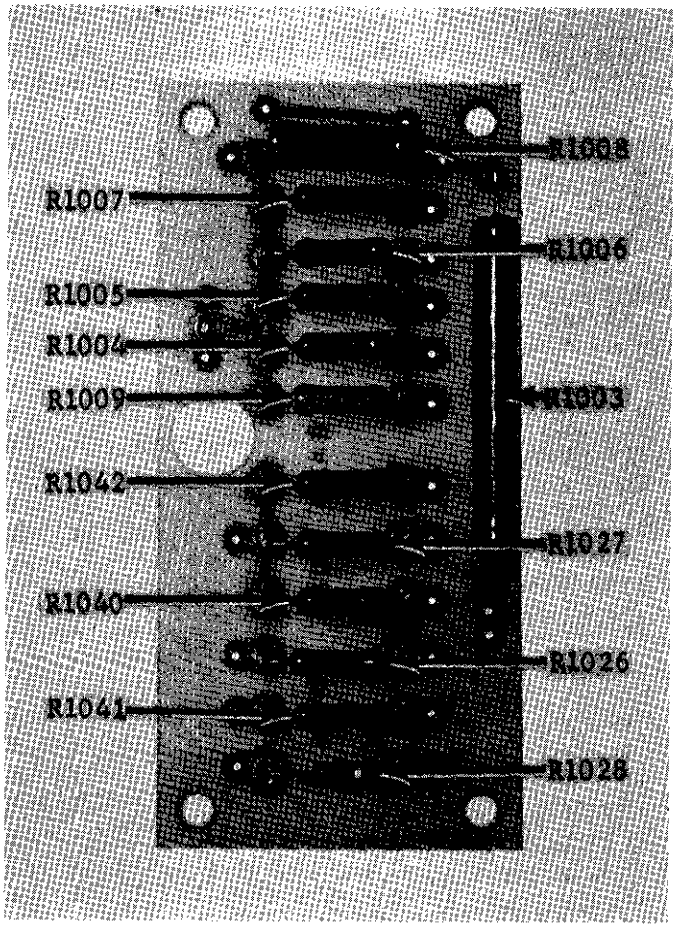

FIGURE 15. Component Locations on Printed Circuit Board PC93-1.

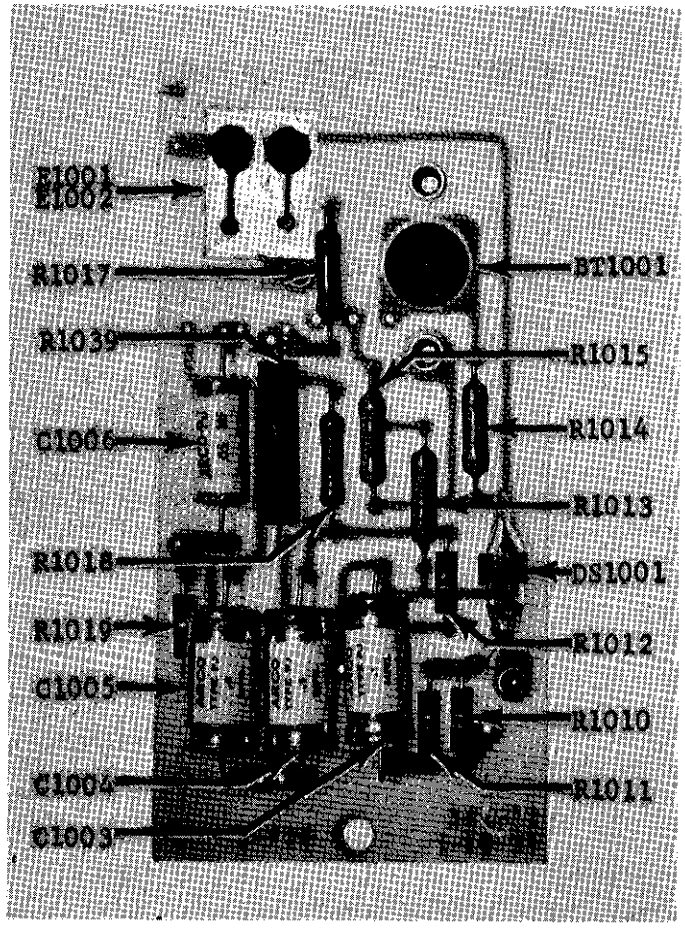

FIGURE 16. Component Locations on Printed Circuit Board PC105.

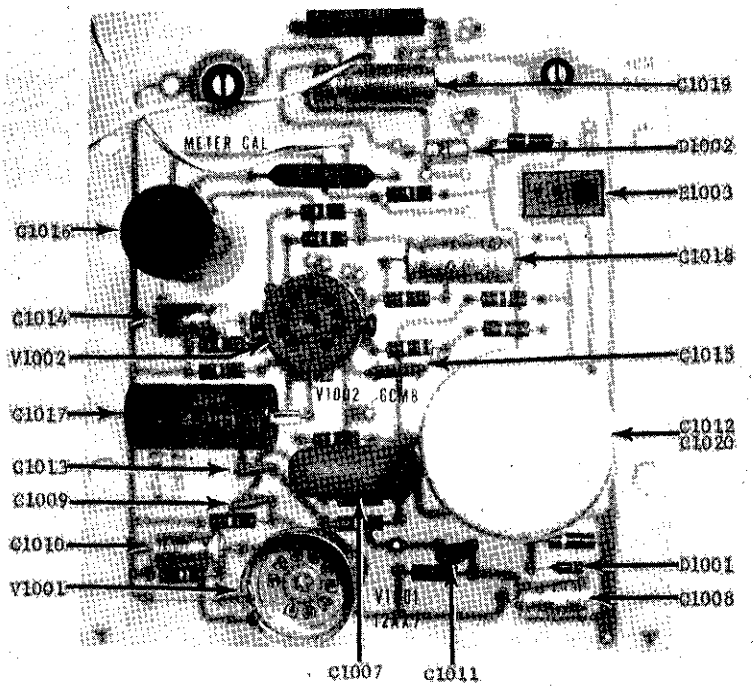

FIGURE 17. Capacitor, Modulator, Diode and Tube Locations on Printed Circuit Board PC93-2. Refer to Figure 18 for resistor location.

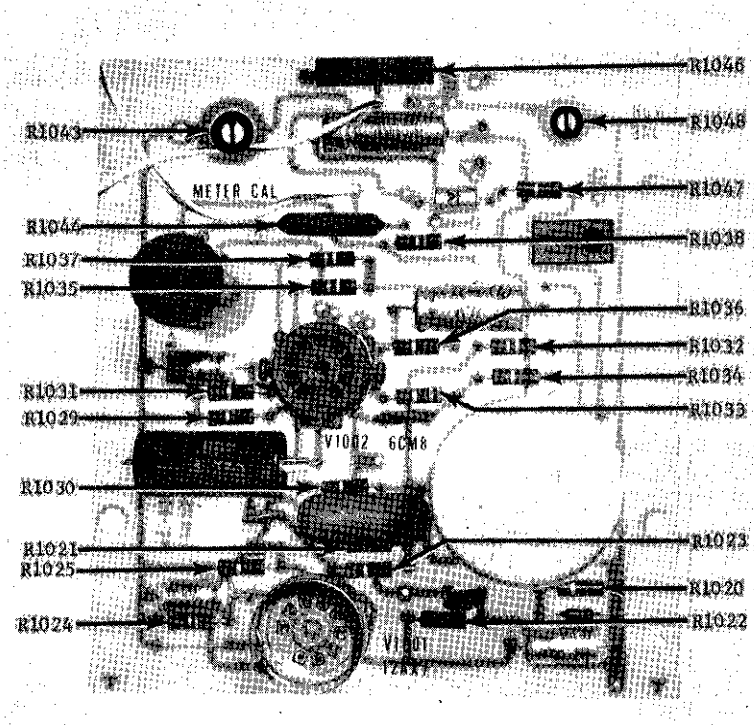

FIGURE 18. Resistor Locations on Printed Circuit Board PC93-2. Refer to Figure 17 for the location of other components.

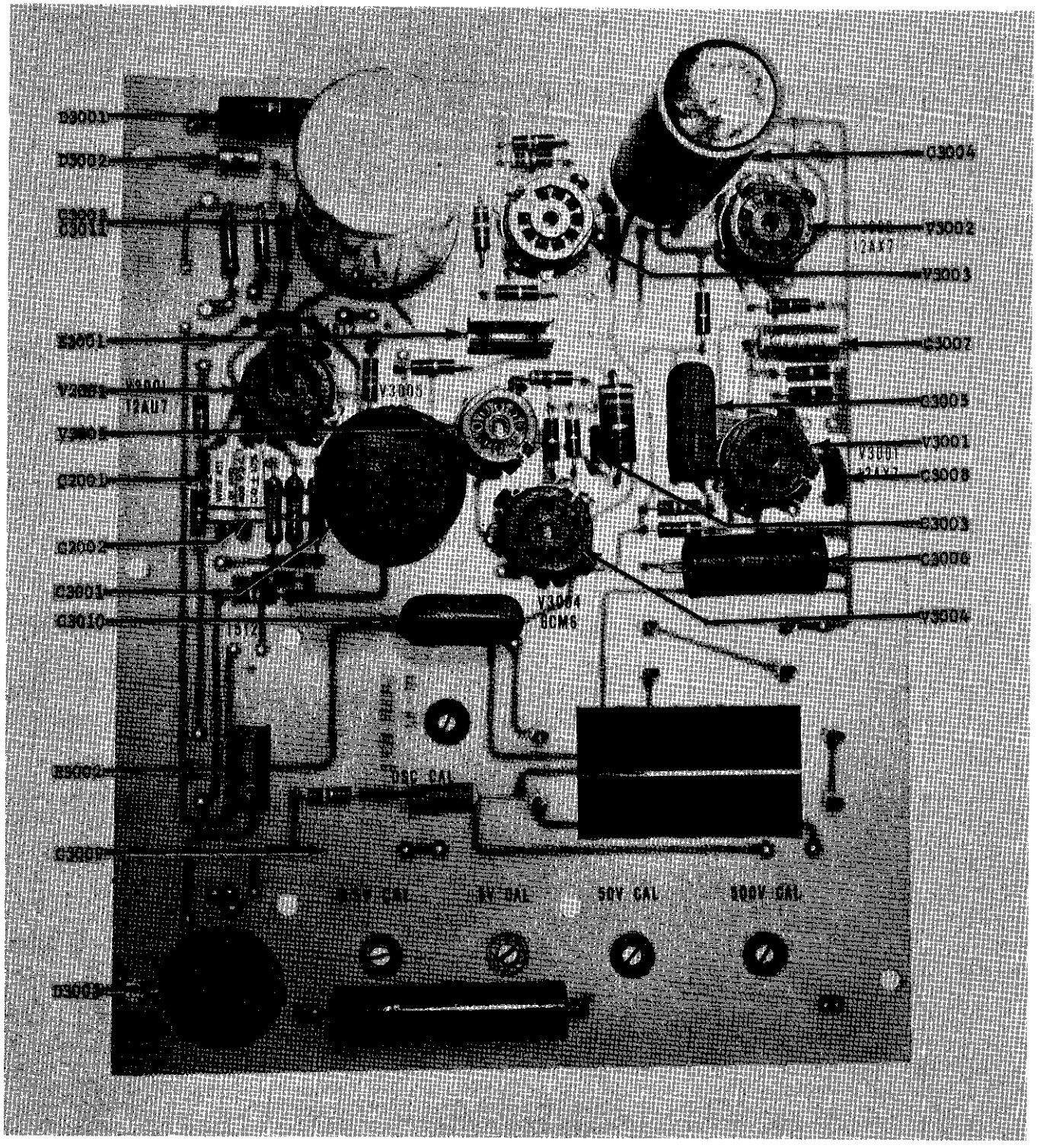

FIGURE 19. Capacitor, Modulator, Diode and Tube Locations on Printed Circuit Board PC92. Refer to Figure 20 for the resistor locations.

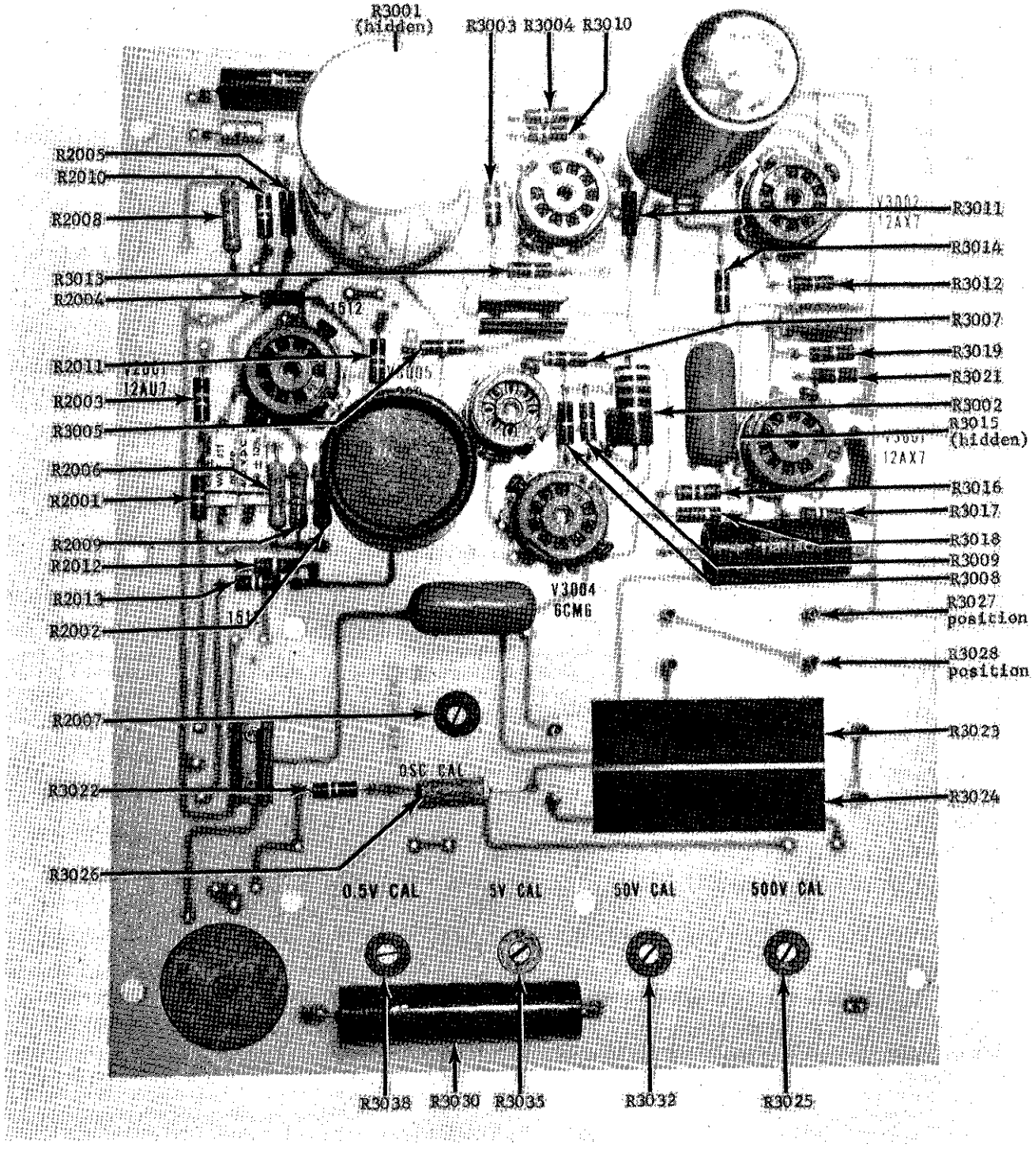

FIGURE 20. Resistor Locations on Printed Circuit Board PC92. Refer to Figure 19 for the location of other components.

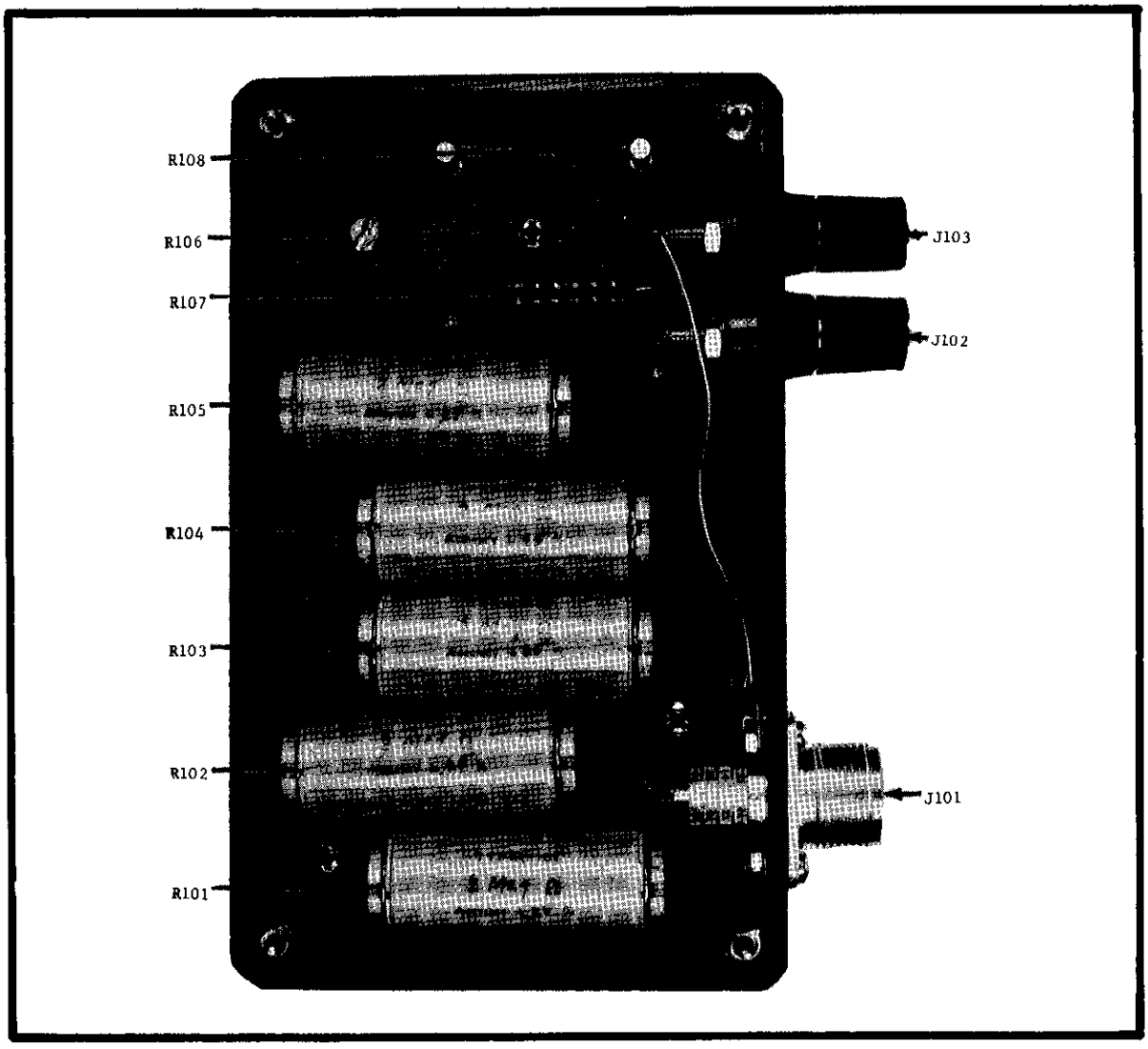

FIGURE 21. Component Locations of Model 6601A. Circuit designations refer to Schematic Diagram 16321B.

SECTION 7. ACCESSORIES

7-1. MODEL 6601A HIGH VOLTAGE DIVIDER.

a. The Model 6601A extends the range of the Model 660A to 5000 volts full scale. The ratio of the Divider is 100:1, ±0.01%; the input resistance is 10 megohms. The limit of error using the Models 660A and 6601A is ±0.03%. Section 8 contains the Replaceable Parts List and Schematic Diagram 16321B for the Divider.

NOTE

Maximum input into the Model 6601A is 5000 volts.

b. Set the Model 660A RANGE Switch to 50 volts. The meter will read to 5000 volts full scale. Connect the HI and LO Divider terminals to the HI and LO Voltmeter terminals respectively. Connect the unknown voltage to the Divider INPUT, and use the Model 660A as outlined in paragraph 2-4.

NOTE

The input cable to the Model 6601A must be able to withstand 5000 volts. Use of normal leads will maintain the accuracy.

7-2. RACK MOUNTING. (See Figure 23.)

a. The Model 660A is shipped for bench use with four feet and a tilt-bail. The Model 4000 Rack Mounting Kit converts the instrument to rack mounting to the standard EIA (RETMA) 19-inch width.

b. To convert the Model 660A, remove the four screws at the bottom of each side of the instrument case. Lift off the top cover assembly with the handles; save the four screws. To remove the feet and tilt bail from the bottom cover assembly, turn the two screws near the back. The two pawl-type fasteners will release the cover and allow it to drop off. Remove the feet and the tilt bail and replace the cover (2).

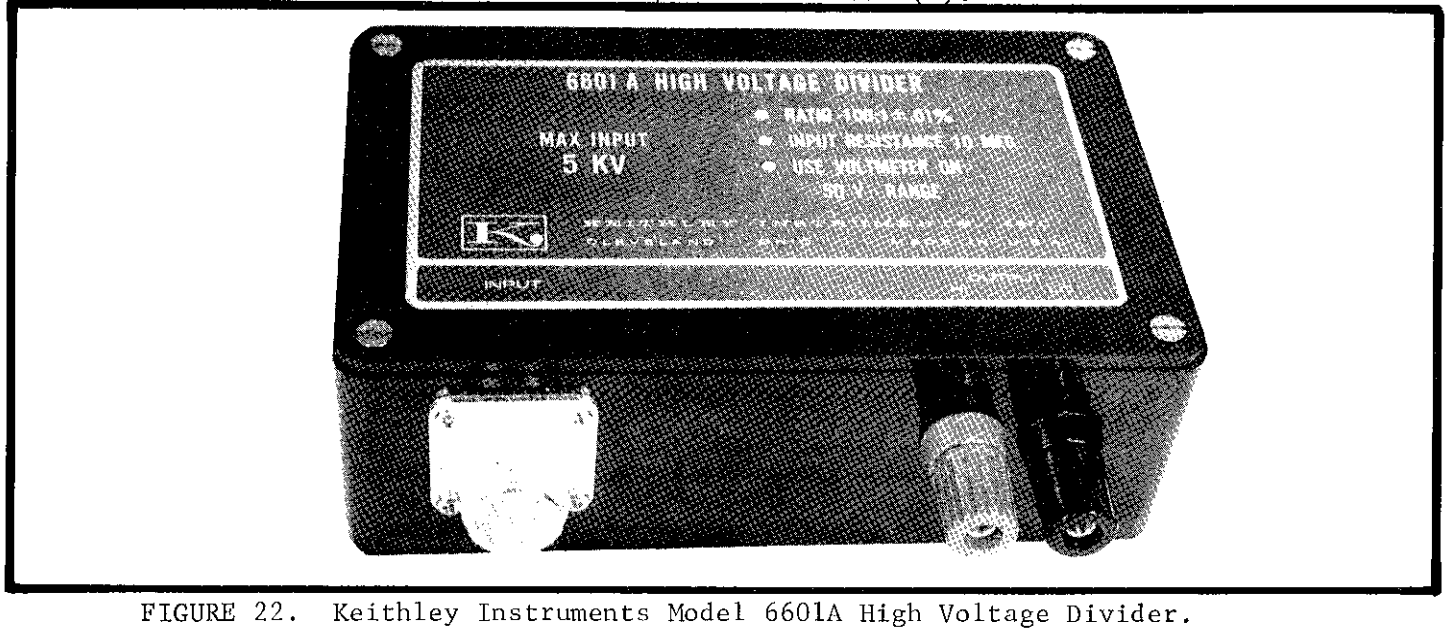

FIGURE 22. Keithley Instruments Model 6601A High Voltage Divider.

c. Attach the pair of rack angles (3) to the cabinet with the four screws (4) previously removed. Insert the top cover assembly (1) in place and fasten to the chassis with the two pawl-type fasteners at the rear. Store the top cover with handles, feet and tilt-bail for future use.

7-3. PLACING IN RACK. The Model 660A, once converted for rack mounting, easily fits into the rack. It is recommended, however, that a blower be used in the rack enclosure in which the Model 660A is mounted. The instrument specifications state a 0.002% per ^{o}C temperature coefficient. A temperature rise of 5 ^{o}C (9 ^{o}F) will cause a 0.01% error.

Item (See Fig. 23)	Description	Keithley Part No.	Quantity
1	Cover Assembly	14623B	1
2	Cover Assembly, Bottom (Supplied with Model 660A)	14590B	1
3	Angle, Rack	14624B	2
4	Screw, Slot Head, 10-32 UNC-2 x 1/4 (Supplied with Model 660A)	---	4
5	Front Panel (Supplied with Model 660A)	---	1

TABLE 7. Parts List for Model 4000 Rack Mounting Kit.

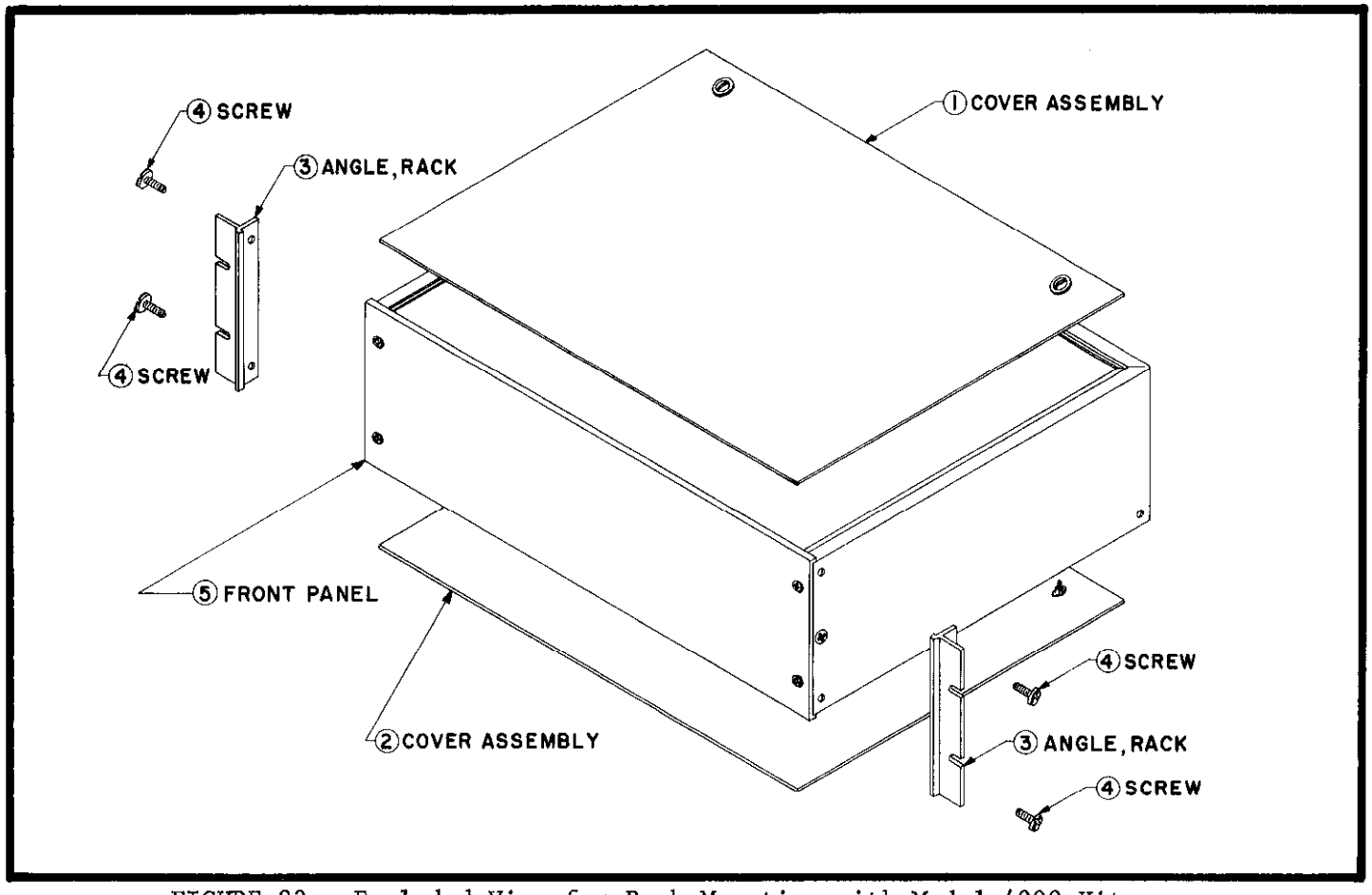

FIGURE 23. Exploded View for Rack Mounting with Model 4000 Kit. Refer to Table 7 for parts list.

SECTION 8. REPLACEABLE PARTS

8-1. REPLACEABLE PARTS LIST. The Replaceable Parts List describes the components of the Models 660A and 6601A. The List gives the circuit designation, the part description, a suggested manufacturer, the manufacturer's part number and the Keithley Part Number. The last column indicates the figure picturing the part. The name and address of the manufacturers listed in the "Mfg. Code" column are in Table 9.

8-2. HOW TO ORDER PARTS.

a. For parts orders, include the instrument's model and serial number, the Keithley Part Number, the circuit designation and a description of the part. All structural parts and those parts coded for Keithley manufacture (80164) must be ordered from Keithley Instruments, Inc. In ordering a part not listed in the Replaceable Parts List, completely describe the part, its function and its location.

b. Order parts through your nearest Keithley representative or the Sales Service Department, Keithley Instruments, Inc.

amp	ampere	MtF	Metal Film
CbVar	Carbon Variable	Mil. No.	Military Type Number
CerD	Ceramic, Disc	My	Mylar
Comp	Composition		
CompV	Composition Variable	Ω	ohm
DCb	Deposited Carbon	Poly	Polystyrene
		p	pico (10^{-12})
EMC	Electrolytic, metal cased		
ETB	Electrolytic, tubular	μ	micro (10^{-6})
ETT	Electrolytic, tantalum		
		v	volt
f	farad	Var	Variable
k	kilo (10^{3})	w	watt
		WW	Wirewound
M or meg	mega (10^{6}) or megohms	WWVar	Wirewound Variable
m	milli (10^{-3})		
Mfg.	Manufacturer		

TABLE 8. Abbreviations and Symbols.

MODEL 660A REPLACEABLE PARTS LIST

(Refer to Schematic Diagram 18269E for circuit designations.)

CAPACITORS

Circuit Desig.	Value	Rating	Type	Mfg. Code	Mfg. Part No.	Keithley Part No.	Fig. Ref.
C1001	.05 μf	600 v	My	56289	6DS-S50	C62-.05M	14
C1002	.47 μf	600 v	My	14655	WMF6P47	C101-.47M	14
C1003	0.1 μf	100 v	Poly	00656	1PJ-104J	C129-.1M	16
C1004	0.1 μf	100 v	Poly	00656	1PJ-104J	C129-.1M	16
C1005	0.1 μf	100 v	Poly	00656	1PJ-104J	C129-.1M	16
C1006	0.05 μf	100 v	Poly	00656	1PJ-503J	C129-.05M	16
C1007	.05 μf	600 v	My	56289	CPS-S50	C62-.05M	17
C1008	10 μf	15 v	ETB	56289	TE1155	C3-10M	17
C1009	.0022 μf	1000 v	CerD	72982	851Z5V222P	C22-.0022M	17
C1010	10 μf	15 v	ETB	56289	TE1155	C3-10M	17
C1011	680 pf	1000 v	CerD	72982	801X5R681K	C22-680P	17
C1012	40 μf	450 v	EMC	56289	TVL2762	C36-40/20M	17
C1013	0.0022 μf	1000 v	CerD	72982	851Z5V222P	C22-.0022M	17
C1014	10 μf	15 v	ETB	56289	TE1155	C3-10M	17
C1015	.0047 μf	1000 v	CerD	72982	811Z5V472P	C22-.0047M	17
C1016	1.0 μf	600 v	My	13050	Z4009	C12-1M	17
C1017	4 μf	250 v	ETB	14655	BBR4-250	C27-4M	17
C1018	125 μf	15 v	ETB	56289	TE1162	C3-125M	17
C1019	600 μf	6 v	ETT	05079	TEZ600-6C2	C133-600M	17
C1020	20 μf	450 v	EMC	56289	TVL2762	C36-40/20M	17
C2001	.01 μf	400 v	Poly	14655	WMF4S1	C114-.01M	19
C2002	.01 μf	400 v	Poly	14655	WMF4S1	C114-.01M	19
C3001	20 μf	450 v	EMC	37942	FP144	C36-20M	19
C3002	20 μf	450 v	EMC	56289	TVL2762	C36-20/40M	19
C3003	.001 μf	1000 v	CerD	72982	801Z5V102P	C22-.001M	19
C3004	1.0 μf	1000 v	My	13050	Z4009B	C14-1M	19
C3005	0.05 μf	600 v	My	56289	6PS-S50	C62-.05M	19
C3006	4 μf	250 v	ETB	14655	BBR4-250	C27-4M	19
C3007	50 μf	6 v	ETB	56289	TE1100	C17-50M	19
C3008	.0047 μf	1000 v	CerD	72982	811Z5V472P	C22-.0047M	19
C3009	.022 μf	200 v	ETB	13050	MW1A	C6-.022M	19
C3010	.05 μf	600 v	My	56289	6PS-S50	C62-.05M	19
C3011	40 μf	450 v	EMC	56289	TVL2762	C36-20/40M	19

DIODES

Circuit Desig.	Type	Number	Mfg. Code	Keithley Part No.	Fig. Ref.
D1001	Silicon	1N645	01295	RF-14	17
D1002	Silicon	1N3256	02735	RF-22	17
D3001	Silicon	1N2378	08520	RF-25	19
D3002	Silicon	1N3256	02735	RF-22	19
D3003	Zener	—	80164	DZ-8 (1)	19

MISCELLANEOUS PARTS

Circuit Desig.	Description	Mfg. Code	Keithley Part No.	Fig. Ref.
BT1001	Battery, 1.34-v mercury (Mfg. No. PX13T2)	37942	BA-16	16
DS1001	Neon Lamp (Mfg. No. NE-81)	08804	PL-6	16
DS2001	Neon Lamp (Mfg. No. NE-2P)	08804	PL-2	13
DS2002	Neon Lamp (Mfg. No. NE-2P)	08804	PL-2	13
DS2003	Neon Lamp (Mfg. No. NE-2P)	08804	PL-2	13
DS2004	Neon Lamp (Mfg. No. NE-2P)	08804	PL-2	13
E1001	Light Modulator	80164	Model 1513	16
E1002	Light Modulator	80164	Model 1513	16
E1003	Light Modulator	80164	Model 1514	17
E3001	Light Modulator	80164	Model 1512	19
E3002	Light Modulator	80164	Model 1514	19
F1001 (117 v)	Fuse, slow blow, 1 amp (Mfg. Type MDL)	71400	FU-10	3
F1001 (234 v)	Fuse, slow blow, 0.5 amp (Mfg. No. 312.500)	75915	FU-6	3
—	Fuse Holder (Mfg. No. 342012)	75915	FH-3	
J1001	Binding Post, HI (Mfg. No. DF31RC)	58474	BP-8R	2
J1002	Binding Post, LO (Mfg. No. DF31BC)	58474	BP-8B	2
J1003	Binding Post, LO (Mfg. No. DF31BC)	58474	BP-8B	2
J1004	Binding Post, GND (Mfg. No. DF31BC)	58474	BP-8B	2
—	Shorting Link (Mfg. No. 938-L)	24655	BP-6	
J1005	Banana Jack, + (Mfg. No. 108-745-1)	74970	BJ-3	3
J1006	Banana Jack, - (Mfg. No. 108-745-2)	74970	BJ-4	3
M1001	Meter	80164	ME-38	13
P1001	Power Cord, 6 feet (Mfg. No. 4638-13)	82879	CO-5	3
S1001	Rotary Switch less components, NULL	80164	SW-191	2
—	Knob Assembly, Null Switch	80164	14838A	
—	Knob Assembly, Meter Zero Potentiometer	80164	15110A	

(1) Refer to paragraph 5-6.

MISCELLANEOUS PARTS (Cont'd)

Circuit Desig.	Description	Mfg. Code	Keithley Part No.	Fig. Ref.
S3002	Slide Switch, 117-234	80164	SW-151	3
S3003	Switch Assembly with components, Readout	80164	18339B	2
-----	Dial Assembly, 0-4 Readout	80164	14827A	
S3004	Switch Assembly with components, Readout	80164	15114B	2
-----	Dial Assembly, 0-9 Readout	80164	14828A	
S3005	Switch Assembly with components, Readout	80164	15112B	2
-----	Dial Assembly, 0-9 Readout	80164	14828A	
S3006	Rotary Switch less components, Readout	80164	SW-118	2
-----	Dial Assembly, 0-9 Readout	80164	14828A	
-----	Dial Assembly, 0-10 Readout	80164	19185A	
S3007	Toggle Switch, SPST, ON (Mfg. No. 2099141)	04009	SW-4	2
S3008	Rotary Switch less components, RANGE	80164	SW-116	2
-----	Knob Assembly, Range Switch	80164	14838A	
S3009	Rotary Switch less components, POLARITY	80164	SW-203	2
-----	Knob Assembly, Polarity Switch	80164	14838A	
T3001	Transformer	80164	TR-67	13

RESISTORS

Circuit Desig.	Value	Rating	Type	Mfg. Code	Mfg. Part No.	Keithley Part No.	Fig. Ref.
R1001	100 MΩ	20%, 1/2 w	Comp	75042	GBT	R37-100M	14
R1002	1 kΩ	10%, 1/2 w	Comp	01121	EB	R1-1K	14
R1003	50 MΩ	1%, 2 w	DCb	91637	DC-2	R14-50M	15
R1004	1.5 MΩ	1%, 1/2 w	DCb	79727	CFE-15	R12-1.5M	15
R1005	5 kΩ	1%, 1/2 w	DCb	79727	CFE-15	R12-5K	15
R1006	50 kΩ	1%, 1/2 w	DCb	79727	CFE-15	R12-50K	15
R1007	505 kΩ	1%, 1/2 w	DCb	79727	CFE-15	R12-505K	15
R1008	12.5 MΩ	1%, 1 w	DCb	91637	DC-1	R13-12.5M	15
R1009	1.14 MΩ	1%, 1/2 w	DCb	79727	CFE-15	R12-1.14M	15
R1010	220 kΩ	10%, 1/2 w	Comp	01121	EB	R1-220K	16
R1011	220 kΩ	10%, 1/2 w	Comp	01121	EB	R1-220K	16
R1012	220 kΩ	10%, 1/2 w	Comp	01121	EB	R1-220K	16
R1013	3 kΩ	1%, 1/2 w	DCb	79727	CFE-15	R12-3K	16
R1014	3 kΩ	1%, 1/2 w	DCb	79727	CFE-15	R12-3K	16
R1015	900 kΩ	1%, 1/2 w	DCb	79727	CFE-15	R12-900K	16

RESISTORS (Cont'd)

Circuit Desig.	Value	Rating	Type	Mfg. Code	Mfg. Part No.	Keithley Part No.	Fig. Ref.
R1016	15 kΩ	10%, 5 w	WWVar	71450	AW	RP19-15K	2
R1017	200 kΩ	1%, 1/2 w	DCb	79727	CFE-15	R12-200K	16
R1018	470 kΩ	1%, 1/2 w	DCb	79727	CFE-15	R12-470K	16
R1019	1 MΩ	10%, 1/2 w	Comp	01121	EB	R1-1M	16
R1020	22 MΩ	10%, 1/2 w	Comp	01121	EB	R1-22M	18
R1021	1.5 MΩ	10%, 1/2 w	Comp	01121	EB	R1-1.5M	18
R1022	10 kΩ	10%, 1/2 w	Comp	01121	EB	R1-10K	18
R1023	1.5 MΩ	10%, 1/2 w	Comp	01121	EB	R1-1.5M	18
R1024	15 kΩ	10%, 1/2 w	Comp	01121	EB	R1-15K	18
R1025	10 MΩ	10%, 1/2 w	Comp	01121	EB	R1-10M	18
R1026	70 kΩ	1%, 1/2 w	DCb	79727	CFE-15	R12-70K	15
R1027	450 kΩ	1%, 1/2 w	DCb	79727	CFE-15	R12-450K	15
R1028	4 MΩ	1%, 1/2 w	DCb	79727	CFE-15	R12-4M	15
R1029	10 MΩ	10%, 1/2 w	Comp	01121	EB	R1-10M	18
R1030	1.5 MΩ	10%, 1/2 w	Comp	01121	EB	R1-1.5M	18
R1031	8.2 kΩ	10%, 1/2 w	Comp	01121	EB	R1-8.2K	18
R1032	100 kΩ	10%, 1/2 w	Comp	01121	EB	R1-100K	18
R1033	3.3 MΩ	10%, 1/2 w	Comp	01121	EB	R1-3.3M	18
R1034	10 MΩ	10%, 1/2 w	Comp	01121	EB	R1-10M	18
R1035	100 kΩ	10%, 1/2 w	Comp	01121	EB	R1-100K	18
R1036	1.2 kΩ	10%, 1/2 w	Comp	01121	EB	R1-1.2K	18
R1037	220 kΩ	10%, 1/2 w	Comp	01121	EB	R1-220K	18
R1038	10 kΩ	10%, 1/2 w	Comp	01121	EB	R1-10K	18
R1039	2 kΩ	1%, 1/2 w	WW	01686	E-30	R58-2K	16
R1040	*40 kΩ	1%, 1/2 w	DCb	79727	CFE-15	R12-40K	15
R1041	*400 kΩ	1%, 1/2 w	DCb	79727	CFE-15	R12-400K	15
R1042	*4.7 MΩ	1%, 1/2 w	DCb	79727	CFE-15	R12-4.7M	15
R1043	500 Ω	10%, 5 w	WWVar	71450	AW	RP3-500	18
R1044	1.5 kΩ	1%, 1/2 w	WW	01686	E-30	R58-1.5K	18
R1045	200 Ω	10%, 2 w	WWVar	71450	P252	RP22-200	3
R1046	80 Ω	1%, 1/2 w	WW	01686	E-30	R58-80	18
R1047	1 kΩ	10%, 1/2 w	Comp	01121	EB	R1-1K	18
R1048	1 kΩ	20%, .2 w	CompV	71450	70	RP31-1K	18
R2001	220 kΩ	10%, 1/2 w	Comp	01121	EB	R1-220K	20
R2002	1.8 MΩ	1%, 1/2 w	DCb	79727	CFE-15	R12-1.8M	20
R2003	100 kΩ	10%, 1/2 w	Comp	01121	EB	R1-100K	20
R2004	150 kΩ	10%, 1/2 w	Comp	01121	EB	R1-150K	20
R2005	150 kΩ	10%, 1/2 w	Comp	01121	EB	R1-150K	20
R2006	1.8 MΩ	1%, 1/2 w	DCb	79727	CFE-15	R12-1.8M	20
R2007	50 kΩ	30%, 1/2 w	CompV	71450	VA-45	RP16B-50K	20
R2008	40 kΩ	1%, 1/2 w	DCb	79727	CFE-15	R12-40K	20

* Nominal value, factory set.

RESISTORS (Cont'd)

Circuit Desig.	Value	Rating	Type	Mfg. Code	Mfg. Part No.	Keithley Part No.	Fig. Ref.
R2009	150 kΩ	1%, 1/2 w	DCb	79727	CFE-15	R12-150K	20
R2010	180 kΩ	1%, 1/2 w	DCb	79727	CFE-15	R12-180K	20
R2011	100 kΩ	10%, 1/2 w	Comp	01121	EB	R1-100K	20
R2012	100 kΩ	10%, 1/2 w	Comp	01121	EB	R1-100K	20
R2013	220 kΩ	10%, 1/2 w	Comp	01121	EB	R1-220K	20
R3001	220 Ω	10%, 1/2 w	Comp	01121	EB	R1-220	20
R3002	50 kΩ	10%, 2 w	Comp	01121	HB	R4A-50K	20
R3003	820 kΩ	10%, 1/2 w	Comp	01121	EB	R1-820K	20
R3004	150 kΩ	10%, 1/2 w	Comp	01121	EB	R1-150K	20
R3005	1 MΩ	10%, 1/2 w	Comp	01121	EB	R1-1M	20
R3006	1 MΩ	10%, 1/2 w	Comp	01121	EB	R1-1M	14
R3007	3.3 kΩ	10%, 1/2 w	Comp	01121	EB	R1-3.3K	20
R3008	1 MΩ	10%, 1/2 w	Comp	01121	EB	R1-1M	20
R3009	470 Ω	10%, 1/2 w	Comp	01121	EB	R1-470	20
R3010	470 kΩ	10%, 1/2 w	Comp	01121	EB	R1-470K	20
R3011	1 MΩ	10%, 1/2 w	Comp	01121	EB	R1-1M	20
R3012	4.7 kΩ	10%, 1/2 w	Comp	01121	EB	R1-4.7K	20
R3013	1 MΩ	10%, 1/2 w	Comp	01121	EB	R1-1M	20
R3014	10 MΩ	10%, 1/2 w	Comp	01121	EB	R1-10M	20
R3015	330 kΩ	10%, 1/2 w	Comp	01121	EB	R1-330K	20
R3016	680 kΩ	10%, 1/2 w	Comp	01121	EB	R1-680K	20
R3017	270 kΩ	10%, 1/2 w	Comp	01121	EB	R1-270K	20
R3018	2.2 MΩ	10%, 1/2 w	Comp	01121	EB	R1-2.2M	20
R3019	5.6 kΩ	10%, 1/2 w	Comp	01121	EB	R1-5.6K	20
R3020	65.4 kΩ	0.1%, 50 w	WW	91637	RH-50	R73-65.4K	13
R3021	1 MΩ	10%, 1/2 w	Comp	01121	EB	R1-1M	20
R3022	220 kΩ	10%, 1/2 w	Comp	01121	EB	R1-220K	20
R3023	125 kΩ	0.1%, 2 w	WW	80164		(1)	20
R3024	125 kΩ	0.1%, 2 w	WW	80164		(1)	20
R3025	200 Ω	10%, 5 w	WWVar	71450	AW	RP34-200	20
R3026	4.4 kΩ	0.1%, 1/4 w	WW	80164		(1)	20
R3027	*	0.1%, 1/4 w	WW	01686	7009	R95-*	20
R3028	*	0.1%, 1/4 w	WW	01686	7009	R95-*	20
R3029	1 kΩ	1%, 1/2 w	DCb	79727	CFE-15	R12-1K	13
R3030	250 kΩ	.1%, 2 w	WW	01686	7070	R93-250K	20
R3031	91 kΩ	1%, 1/2 w	DCb	79727	CFE-15	R12-91K	14
R3032	1 kΩ	10%, 5 w	WWVar	71450	AW	RP34-1K	20

* Nominal value, factory set. Refer to paragraph 5-6.
(1) R3023, R3024 and R3026 comprise a matched set, Keithley Part No. 18370A

RESISTORS (Cont'd)

Circuit Desig.	Value	Rating	Type	Mfg. Code	Mfg. Part No.	Keithley Part No.	Fig. Ref.
R3033	32.33 kΩ	0.1%, 1/2 w	WW	80164		(2)	14
R3034	91 kΩ	1%, 1/2 w	DCb	79727	CFE-15	R12-91K	14
R3035	1 kΩ	10%, 5 w	WWVar	71450	AW	RP34-1K	20
R3036	2.563 kΩ	0.1%, 1/2 w	WW	80164		(2)	14
R3037	930 kΩ	1%, 1/2 w	DCb	79727	CFE-15	R12-930K	14
R3038	1 kΩ	10%, 5 w	WWVar	71450	AW	RP34-1K	20
R3039	250.9 Ω	0.1%, 1/2 w	WW	80164		(2)	14
R3040 to R3045	40 kΩ	0.02%, 1 w	WW	80164		(3)	13
R3046 to R3056	8 kΩ	0.02%, 1 w	WW	80164		(4)	13
R3057 to R3067	1.6 kΩ	0.05%, 1/2 w	WW	80164		(5)	13
R3068 to R3078	320 Ω	0.1%, 1/2 w	WW	01686	7044	R67-320	13
R3079	*	1%, 1/2 w	DCb	79277	CFE-15	R12-*	13
R3080	750 Ω	10%, 4 w	WWVar	12697	58M	RP49-750	13

VACUUM TUBES

Circuit Desig.	Number	Mfg. Code	Keithley Part No.	Fig. Ref.
V1001	7025	73445	EV-7025	17
V1002	6CM8	00011	EV-6CM8	17
V2001	12AU7	73445	EV-12AU7	19
V3001	7025	73445	EV-7025	19
V3002	7025	73445	EV-7025	19
V3003	7025	73445	EV-7025	19
V3004	6CM6	00011	EV-6CM6	19
V3005	OG3	73445	EV-OG3	19

* Nominal value, factory set.

(2) R3033, R3036 and R3039 comprise a matched set, Keithley Part No. 20019A.

(3) Part of assembly with S3003, Keithley Part No. 18339B.

(4) Part of assembly with S3004, Keithley Part No. 15114B.

(5) Part of assembly with S3005, Keithley Part No. 15112B.

MODEL 6601A REPLACEABLE PARTS LIST

(Refer to schematic Diagram 16321B for circuit designations)

TERMINALS

Circuit Desig.	Description	Mfg. Code	Keithley Part No.	Fig. Ref.
J101	Receptacle, hn modified	80164	CS-79	22
---	Plug, hn, Mate of J101, Mil No. UG-59A/U (Mfg. No. 7908)	91737	CS-80	22
J102	Binding Post, HI OUTPUT (Mfg. No. DF31RC)	58474	BP-8R	22
J103	Binding Post, LO OUTPUT (Mfg. No. DF31BC)	58474	BP-8B	22

RESISTORS

Circuit Desig.	Value	Rating	Type	Mfg. Code	Mfg. Part No.	Keithley Part No.	Fig. Ref.
R101	2 MΩ	0.1%, 1 w	WW	54294	P116	R91-2M	22
R102	2 MΩ	0.1%, 1 w	WW	54294	P116	R91-2M	22
R103	2 MΩ	0.1%, 1 w	WW	54294	P116	R91-2M	22
R104	2 MΩ	0.1%, 1 w	WW	54294	P116	R91-2M	22
R105	2 MΩ	0.1%, 1 w	WW	54294	P116	R91-2M	22
R106	200 Ω	10%, 2 w	WWVar	71450	AW	RP3-200	22
R107	100 kΩ	0.1%, 1 w	WW	54294	P-36	R90-100K	22
R108	*1 kΩ	1%, 1/2 w	DCb	79727	CFE-15	R12-1K	22

* Nominal value, factory set.

00011	Sylvania Electric Products, Inc. Buffalo Operations of Sylvania Electronic Systems Buffalo, N. Y.	04009	Arrow-Hart and Hegeman Electric Co. Hartford, Conn.
00656	Aerovox Corp. New Bedford, Mass.	04713	Motorola, Inc. Semiconductor Products Division Phoenix, Arizona
01121	Allen-Bradley Corp. Milwaukee, Wis.	05079	Tansitor Electronics, Inc. Bennington, Vt.
01295	Texas Instruments, Inc. Semi-Conductor-Components Division Dallas, Texas	08520	Electronic Devices, Inc. North Ridgeville, Ohio
01686	RCL Electronics, Inc. Riverside, N. J.	08804	Lamp Metals and Components Department G. E. Co. Cleveland, Ohio
02735	RCA Semiconductor and Materials Division of Radio Corp. of America Somerville, N. J.	12697	Clarostat Mfg. Co., Inc. Dover, N. H.
		13050	Potter Co. Wesson, Miss.

TABLE 9 (Sheet 1). Code List of Suggested Manufacturers. (Based on Federal Supply Code for Manufacturers, Cataloging Handbook H4-1.)

14655	Cornell-Dubilier Electric Corp. Newark, N. J.	73445	Amperex Electronic Co. Division of North American Philips Co., Inc. Hicksville, N. Y.
15909	Daven Co. Livingston, N. J.	74970	Johnson, E. F., Co. Waseca, Minn.
24655	General Radio Co. West Concord, Mass.	75042	International Resistance Co. Philadelphia, Pa.
37942	Mallory, P. R., and Co., Inc. Indianapolis, Ind.	75915	Littelfuse, Inc. Des Plaines, Ill.
53021	Sangamo Electric Co. Springfield, Ill.	79727	Continental-Wirt Electronics Corp. Philadelphia, Pa.
54294	Shallcross Mfg. Co. Selma, N. C.	80164	Keithley Instruments, Inc. Cleveland, Ohio
56289	Sprague Electric Co. North Adams, Mass.	81483	International Rectifier Corp. El Segundo, Calif.
58474	Superior Electric Co., The Bristol, Conn.	82879	Royal Electric Corp. Pawtucket, R. I.
71400	Bussmann Mfg. Div. of McGraw-Edison Co. St. Louis, Mo.	85599	Tube Department G. E. Co. Schenectady, N. Y.
71450	CTS Corp. Elkhart, Ind.	91637	Dale Electronics, Inc. Columbus, Nebr.
71590	Centralab Division of Globe-Union, Inc. Milwaukee, Wis.	91737	Gremar Mfg. Co., Inc. Wakefield, Mass.
72982	Gudeman Co. Chicago, Ill.		

TABLE 9 (Sheet 2). Code List of Suggested Manufacturers. (Based on Federal Supply Code for Manufacturers, Cataloging Handbook H4-1.)

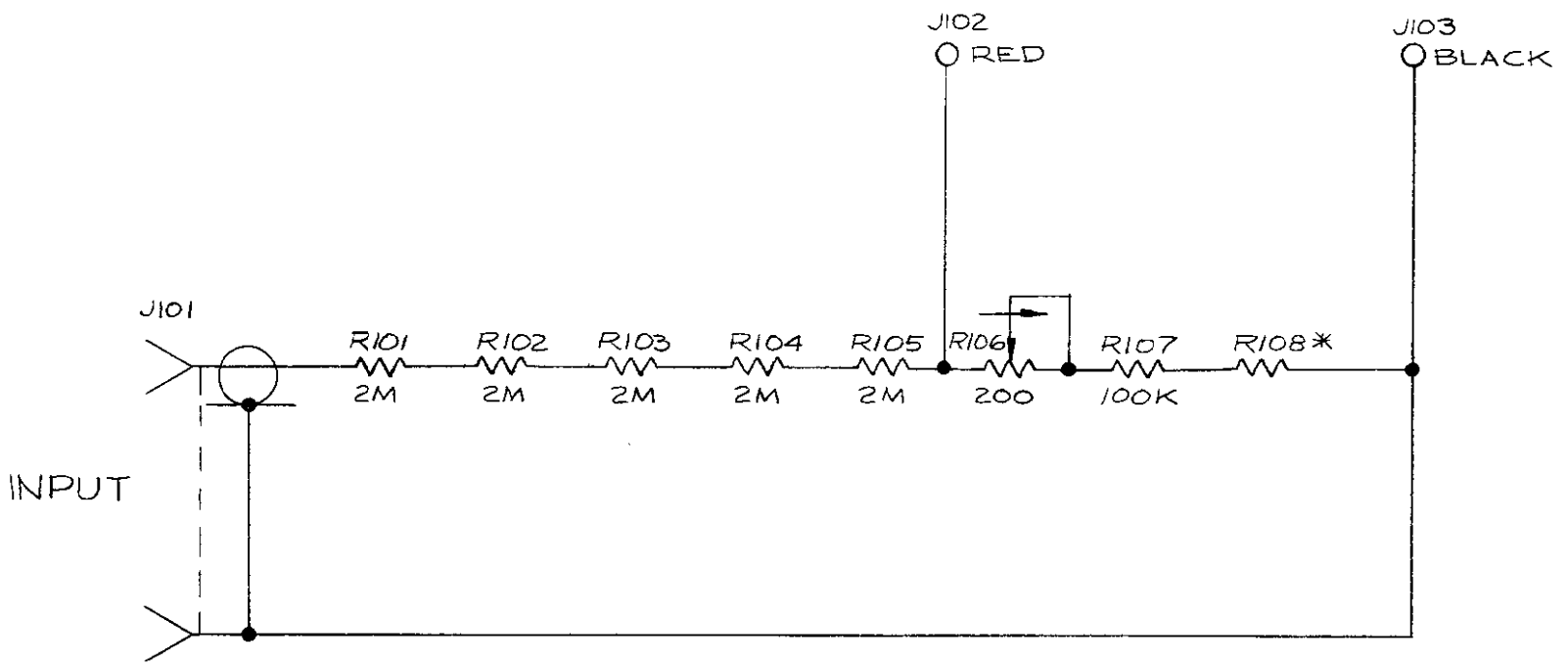

*850 TO 2000 OHMS

REVISIONS			
LTR.	ECO No.	APPR.	DATE
A			

MODEL	NEXT ASSEMBLY	QUAN.
6601A	16267M	1

USED ON

DIMENSIONAL TOLERANCES UNLESS OTHERWISE SPECIFIED		
FRAC.	DEC.	ANG.
± 1/64	± .005	± 1°
DO NOT SCALE		

DRN. C.F.M.	DATE 042963	
CKD. [illegible]	DATE 4.29.63	
ENG. APPR. [illegible]	DATE 4.29.63	
PILOT RELEASE [illegible]	DATE 4.29.63	
PROD. RELEASE	DATE	

KEITHLEY INSTRUMENTS
CLEVELAND, OHIO

TITLE: SCHEMATIC, INPUT DIVIDER PROBE

MATERIAL

FINISH

PART NUMBER: 16321B

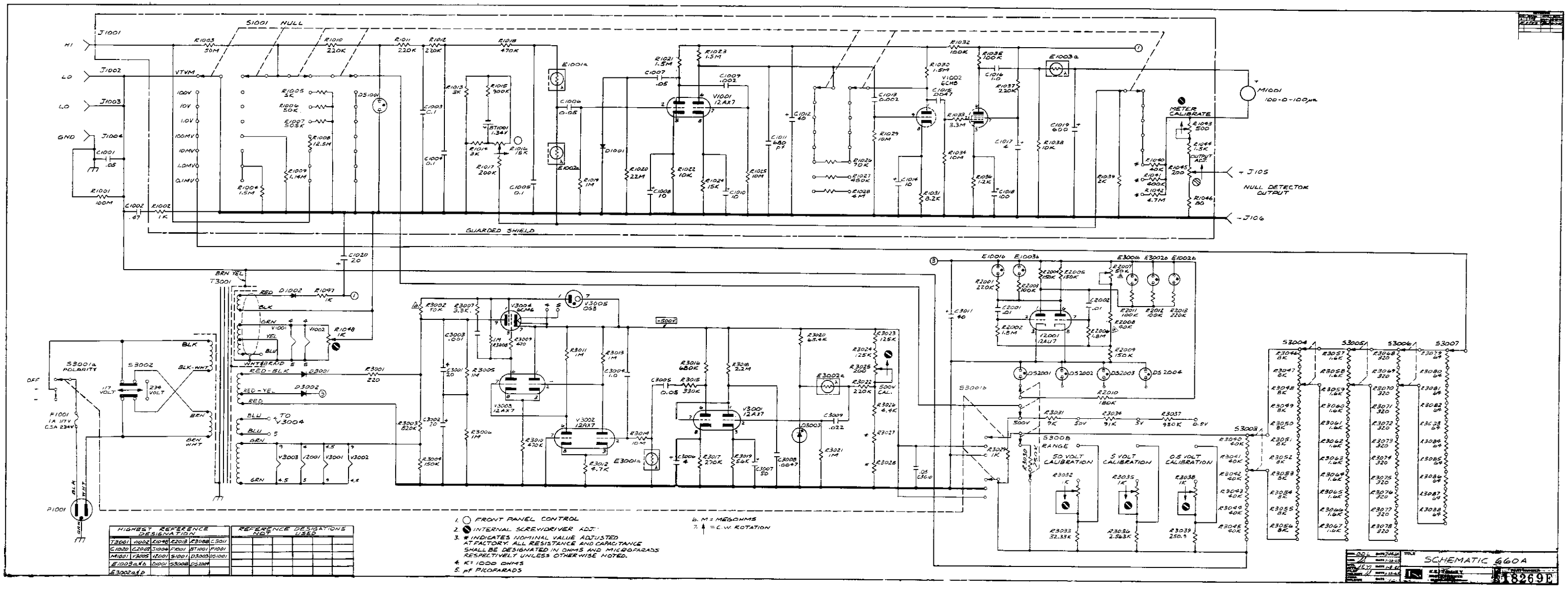

HIGHEST REFERENCE DESIGNATION						REFERENCE DESIGNATIONS NOT USED
T3001	V1002	E1048	R2013	R3088	C3011	
C1020	C2007	S1004	F1001	BT1001	P1001	
M1001	V3005	V2001	S1001	D3003	DS1001	
E1003a&b		D1001	S3008	DS2004		
E3002a&b						

1. ○ FRONT PANEL CONTROL
2. ● INTERNAL SCREWDRIVER ADJ.
3. * INDICATES NOMINAL VALUE ADJUSTED AT FACTORY. ALL RESISTANCE AND CAPACITANCE SHALL BE DESIGNATED IN OHMS AND MICROFARADS RESPECTIVELY UNLESS OTHERWISE NOTED.
4. K = 1000 OHMS
5. pf PICOFARADS
6. M = MEGOHMS
7. ↑ = C.W. ROTATION

SCHEMATIC 660A

18269E