HP 5245L Digital Frequency Meter



This 8-digit counter/frequency meter was introduced around the mid sixties. It was all solid-state, excepted for the displays.

The basic counter accepted input signals up to 50 MHz, 100 mV rms minimum, AC or DC coupled. Internal 1 MHz time base with long-term stability better than 0.003 ppm in 24 hours.

The 5245L accepted several plug-ins for time and frequency measurements. In the photo above the counter is shown with a 5257A transfer oscillator which extends the frequency range to 18 GHz.



5245L manual below.

5245L ELECTRONIC COUNTER

SERVICE MANUAL

HEWLETT hp PACKARD

HP 5245L

HEWLETT hp PACKARD

CERTIFICATION

The Hewlett-Packard Company certifies that this instrument was thoroughly tested and inspected and found to meet its published specifications when it was shipped from the factory. The Hewlett-Packard Company further certifies that its calibration measurements are traceable to the U.S. National Bureau of Standards to the extent allowed by the Bureau's calibration facility.

WARRANTY AND ASSISTANCE

All Hewlett-Packard products are warranted against defects in materials and workmanship. This warranty applies for one year from the date of delivery, or, in the case of certain major components listed in the operating manual, for the specified period. We will repair or replace products which prove to be defective during the warranty period. No other warranty is expressed or implied. We are not liable for consequential damages.

For any assistance contact your nearest Hewlett-Packard Sales and Service Office. Addresses are provided at the back of this manual.

SERVICE MANUAL

MODEL 5245L
ELECTRONIC COUNTER

SERIALS PREFIXED: 628-

This manual applies directly to Ⓗ Model 5245L Electronic Counters having serial prefix number 628.

SERIAL PREFIXES NOT LISTED

For serial prefixes above 628, a change sheet will be included with the manual. For serial prefixes below 628, refer to 5245L Operating and Service Manual serial prefixed 544.

OPTIONS

This manual with changes described in Section V also applies to Options 02 and 03.

Copyright HEWLETT-PACKARD COMPANY 1966
1501 PAGE MILL ROAD, PALO ALTO, CALIFORNIA, U.S.A.

02349-1

Printed: SEPT 1966

MANUAL CONTENT

This is a Service Manual only. Operating instructions are outlined in a separate Operating Manual. This Service Manual is supplied to help you make best use of your hp Model 5245L Electronic Counter. Seven sections of information are included as follows:

Section I is an introduction to the counter. This includes a table of technical specifications.

Section II discusses detailed theory for the circuits used.

Section III outlines a performance check procedure to verify operation.

Section IV lists parts for the counter.

Section V covers available options and manual changes required to backdate this manual.

Section VI contains adjustment and troubleshooting procedures which include a self check.

Section VII is the circuit diagrams for the counter. These include block diagrams, schematic diagrams, and some waveforms and voltages.

HOW TO ORDER

To order an Operating or Service Manual for your Electronic Counter, contact the nearest Hewlett-Packard Sales and Service Office. Lists are provided at the back of this manual. Give complete 8-digit serial number and name of instrument. Comments and suggestions concerning this manual are welcome at any Sales and Service Office.

TABLE OF CONTENTS

Section			Page
I	GENERAL INFORMATION		1-1
	1-1.	Introduction	1-1
	1-6.	Instrument Identification	1-1
	1-9.	Installation and Operation	1-1
II	PRINCIPLES OF OPERATION		2-1
	2-1.	Introduction	2-1
	2-3.	The Diode	2-1
	2-11.	The Transistor	2-2
	2-25.	Basic Operation of Decimal Counter or Decade Divider	2-4
	2-36.	Basic Counter Functions	2-9
	2-44.	Time Sequence	2-10
	2-49.	Overall Counter Operation	2-11
	2-51.	Input Switch Assembly A1	2-11
	2-54.	Time-Base Switch Assembly A2	2-13
	2-56.	Function Switch Assembly A3	2-13
	2-58.	Mode Switch Assembly A4	2-13
	2-60.	Output Switch Assembly A5	2-14
	2-62.	Power Supply: Rectifier Assembly A6; Regulator Assembly A7	2-14
	2-70.	Decimal Point Assembly A8	2-15
	2-73.	Measurement Units Assembly A9	2-15
	2-76.	Low Frequency Decimal Counter Assembly A10-A14	2-15
	2-78.	5 MHz Decimal Counter Assembly A15, A16	2-15
	2-80.	50 MHz Decimal Counter Assembly A17	2-15
	2-84.	50 MHz Readout Assembly A18	2-18
	2-88.	Input Amplifier Assembly A19-A20	2-18
	2-91.	Function Control Assembly A21	2-19
	2-95.	Gate Control Assembly A22	2-20
	2-99.	Sampling Control Assembly A23	2-21
	2-105.	Oscillator and Oven A24, A25, A26	2-22
	2-111.	Multiplier Assembly A27	2-22
	2-113.	5 MHz Decade Divider Assembly A28	2-22
	2-115.	Low-Frequency Decade Divider Assembly A29-A34	2-22
	2-117.	Time-Base Control Assembly A35	2-23
III	PERFORMANCE CHECK		3-1
IV	REPLACEABLE PARTS		4-1
	4-1.	Introduction	4-1
	4-4.	Ordering Information	4-1
V	OPTIONS AND MANUAL CHANGES		
	5-1.	Options	5-1
	5-3.	Option 02 +1248 BCD Code	5-1
	5-5.	Option 03 -1248 BCD Code	5-1
	5-9.	Specials	5-1
	5-13.	Manual Changes	5-1
	5-14.	Current Instruments	6-1
	5-16.	Older Instruments	5-1
VI	ADJUSTMENT AND TROUBLESHOOTING		6-1
	6-1.	Introduction	6-1
	6-3.	Maintenance	6-1
	6-7.	Test Equipment	6-1
	6-9.	Assembly Connection Identification	6-1
	6-11.	Instrument Cover Removal	6-2
	6-13.	Assembly Location	6-2
	6-15.	Printed Circuit Component Replacement	6-2
	6-17.	Adjustments	6-2
	6-18.	Regulator Assembly A7	6-2
	6-19.	Input Amplifier A19	6-3
	6-21.	Ration Input Amplifier A20	6-3
	6-23.	Function Control A21	6-3
	6-24.	Troubleshooting	6-3
	6-25.	Troubleshooting Aids	6-3
	6-32.	Troubleshooting Procedure	6-3
VII	CIRCUIT DIAGRAMS		7-1

LIST OF ILLUSTRATIONS

Figure		Page
1-1.	Model 5245L and Accessories	1-0
2-1.	Basic Diode Circuits	2-1
2-2.	Transistor Operation	2-2
2-3.	Basic Transistor Circuits	2-3
2-4.	Basic Operation of Decimal Counter or Decade Divider	2-4
2-5.	Basic Four Binary Counter	2-5
2-6.	Counting Sequence of Four Binary Counter	2-6
2-7.	Typical Reset Operation in Four Binary Decimal Counter Assembly	2-7
2-8.	Lamp Control	2-8
2-9.	Basic Counter Functions	2-10
2-10.	Standard Frequency Outputs	2-10
2-11.	Scaler Operation	2-11
2-12.	Time Sequence	2-11
2-13.	Model 5245L Logic Block Diagram	2-12
2-14.	Decimal Counter and Decade Divider Block Diagram	2-16
2-15.	50 MHz Counting Sequence	2-17
2-16.	50 MHz Readout and 50 MHz Counter Block Diagram	2-18
2-17.	Function Control Block Diagram	2-19
2-18.	Gate Control Block Diagram	2-20
2-19.	Sampling Control Block Diagram	2-21
4-1.	Modular Cabinet Parts	4-35
4-2.	Mechanical Parts Locations	4-45
5-1.	DP and MU with +1248 BCD Output (J35-5245L Special)	5-14
5-2.	DP and MU with -1248 BCD Output (J36-5245L Special)	5-16
5-3.	Remote Control Wiring and Connectors (Special)	5-18
6-1.	Self Check	6-4
6-2.	Operating Controls (Front Panel)	6-6
6-3.	Operating Controls (Rear Panel)	6-7
6-4.	Top Internal View	6-8
6-5.	Bottom Internal View	6-9
7-1.	General Notes for Schematic Diagrams	7-2
7-2.	Block Diagram	7-3
7-3.	A1 Input Switch	7-5
7-4.	A2 Time Base Switch	7-7
7-5.	A3 Function Switch	7-9
7-6.	A4, A5 Mode Switch, Output Switch	7-11
7-7.	A6, A7 Rectifier, Regulator	7-13
7-8.	A8, A9 Decimal Point, Measurement Units	7-15
7-9.	A10-A14 Decimal Counter (5212L-4A)	7-17
7-10.	A10-A14 Decimal Counter (05212-6002, 6003) Option 02, 03	7-19
7-11.	A15, A16 5 MHz Decimal Counter (05232-6010)	7-21
7-12.	A15, A16 Decimal Counter (05232-6002, 6003) Option 02, 03	7-23
7-13.	A17 Decimal Counter	7-25
7-14.	A18 Readout (5245L-4B)	7-27
7-15.	A18 Readout (05245-6001) Option 02	7-29
7-16.	A18 Readout (05245-6003) Option 03	7-31
7-17.	A19, A20 Input Amplifier	7-33
7-18.	A21 Function Control	7-35
7-19.	A22 Gate Control	7-37
7-20.	A23 Sampling Control	7-39
7-21.	A24, A25, A26 Crystal Oven, Oven Control, Oscillator	7-41
7-22.	A27 Multiplier	7-43
7-23.	A28 Decade Divider	7-45
7-24.	A29-A34 Decade Divider	7-47
7-25.	A35 Time Base Control	7-49
7-26.	J6, J11 Connectors	7-51

LIST OF TABLES

Table		Page
1-1.	Specifications	1-2
2-1.	Four-Line Code Truth Table	2-7
2-2.	Power Supplies	2-14
2-3.	Basic Operation Summary of Four-Binary Counter	2-15
2-4.	Normal Time Base Control	2-23
2-5.	Multiplied Period Control	2-23
3-1.	Recommended Test Equipment	3-1
3-2.	In-Cabinet Performance Check	3-2
4-1.	Reference Designation Index	4-2
4-2.	Replaceable Parts	4-36
4-3.	Manufacturer's Code List	4-46
5-1.	Option 02 Replacement Assemblies	5-1
5-2.	Option 03 Replacement Assemblies	5-1
5-3.	1-2-4-8 Code Truth Table	5-1
5-4.	Reference Designation Index (A18, Option 02)	5-2
5-5.	Reference Designation Index (A18, Option 03)	5-5
5-6.	Reference Designation Index (A15, A16, Options 02 & 03)	5-8
5-7.	Reference Designation Index (A10-A14, Options 02 & 03)	5-11
5-8.	Reference Designation Index (J35-5245L)	5-15
5-9.	Reference Designation Index (J36-5245L)	5-17
6-1.	Fuse Replacement	6-1
6-2.	Recommended Test Equipment	6-1
6-3.	Assembly Designations	6-2
6-4.	Power Supply Voltages	6-3
6-5.	Period Average Checks with External Signal	6-5
6-6.	Assembly Check	6-5
6-7.	Troubleshooting "Tree"	6-10
6-8.	Self Check	6-15



Figure 1-1. Model 5245L and Accessories

SECTION I
GENERAL INFORMATION

1-1. INTRODUCTION.

1-2. DESCRIPTION.

1-3. The HP Model 5245L Electronic Counter is a high-frequency general-purpose electronic counter. The Model 5245L measures frequencies from 0 to 50 MHz, periods from 1 μ sec to 10 seconds, period averages from 10 to 100,000 periods, the ratio of two frequencies, and the multiplied ratio of two frequencies.

1-4. The HP Model 5245L provides these additional features:

a. Decade scaling to 10^9 for any frequency to 50 MHz.

b. Standard output frequencies from 0.1 Hz to 10 MHz in decade steps.

c. Four-line, binary-coded-decimal output to drive digital recorder (HP Model 562A), digital to analog converter (HP Model 580A/581A), remote readout, or data processing equipment (1-2-2-4 code; 1-2-4-8 code available (see Section V).

e. Display storage which permits reading to be displayed while new count is made.

d. Remote control by external contact closure available (see Section V).

f. Eight-digit display using rectangular (narrow) digital display tubes; decimal point position and measurement units displayed automatically.

g. Operation with plug-in units which extend the basic range and performance of the counter.

1-5. The Model 5245L features solid state design, low power consumption, small size (5-1/4 inch panel height), light weight (32 lb), easy conversion for rack mounting, and modular plug-in circuit boards for simplified maintenance.

1-6. INSTRUMENT IDENTIFICATION.

1-7. Each Model 5245L is identified by a two-section, eight-digit (000-00000) serial number on the rear panel. The five-digit number is an identification number unique to each instrument, and the three-digit number is a serial prefix number, used to document changes.

1-8. All instruments with the same serial prefix are the same. The group of instruments to which this manual applies directly is identified on the title page. For older instruments (lower serial numbers), make manual changes listed in Section VI. For newer instruments, having serial numbers higher than those listed on the title page, a Manual Change sheet is included, describing the required changes. The manual for an instrument having special electrical modification will include an insert sheet describing that modification. If a change sheet or special information sheet is missing, the information can be supplied by any Hewlett-Packard sales and service office listed at the back of this manual.

1-9. INSTALLATION AND OPERATION.

1-10. Installation and operation procedures are covered in Sections II and III of the Model 5245L Operating Manual. An explanation of the Counter's controls and connectors and a self-check procedure is included in Section VI of this manual (see Figures 6-1, 6-2, and 6-3).

Table 1-1. Specifications

FREQUENCY MEASUREMENTS

Range: 0 to 50 MHz (dc input). 25 Hz to 50 MHz (ac input, maximum sensitivity).

Gate Time: 1 μsec to 10 seconds in decade steps.

Accuracy: ±1 count ± time base accuracy

Reads In: kHz or MHz with positioned decimal point; units annunciator in line with digital display.

Self Check: counts 10 MHz for the gate time chosen by the time base selector switch.

SCALING

Frequency Range: 0 to 50 MHz.

Factor: by decades up to 10^9, switch selected on rear panel.

Input: front panel, Signal Input.

Output: in place of time base output frequencies.

PERIOD AVERAGE MEASUREMENTS

Range:

Single Period	0 to 1 MHz
Multiple Period	0 to 300 kHz

Periods Averaged: 1 period to 10^5 periods in decade steps.

Accuracy: ±1 count ± time base accuracy ± trigger error. *

Frequency Counted:

1 and 10 period	1 Hz to 10 MHz in decade steps
100 period	10 Hz to 10 MHz
1,000 period	100 Hz to 10 MHz
10,000 period	1 kHz to 10 MHz
100,000 period	10 kHz to 10 MHz

Reads In: sec, ms, μs, with positioned decimal point; units annunciator in line with digital display.

Self Check: Gate time is 10 μs to 1 sec (periods averaged of 100 kHz); counts 100 kHz from the time base.

RATIO MEASUREMENTS

Displays: (f_1/f_2) times period multiplier.

Range: f_1 - 0 to 50 MHz. f_2 - 0 to 1 MHz in single period. 0 to 300 kHz in multiple period; periods averaged 1 to 10^5 in decade steps.

Sensitivity: 0.1 v rms, each input.

Accuracy: ±1 count of f_1 ± trigger error* of f_2. f_1 is frequency applied to the decimal counters (enters Time Base Ext. jack on front panel); f_2 is frequency applied to decade dividers (enters Signal Input jack).

Reads In: Dimensionless; positioned decimal point for number of periods averaged.

Self Check: Period Average Self Check applies.

TIME BASE

Frequency (internal): 1 MHz.

Stability: Aging Rate - less than 3 parts in 10^9 per 24 hours. ** As a Function of Temperature: less than ±2 parts in 10^{10}/°C -20°C to +55°C. As a Function of Line Voltage: less than ±5 parts in 10^{10} for ±10% change in line voltage from 115v or 230 v rms.

Short Term - less than 2 parts in 10^{10} rms with measurement averaging time of one second under constant environmental and line voltage conditions.

Adjustment: Fine frequency adjustment (range approximately 4 parts in 10^8) and medium frequency adjustment (range approximately 1 part in 10^6) are available from the front panel through the plug-in hole. Coarse frequency adjustment (range approximately 1 part in 10^5) is available at the rear of the instrument.

Output Frequencies:

Rear Panel: 0.1 Hz to 10 MHz in decade steps; switch selected on rear panel; all frequencies available in manual function without interruption at reset except 100 Hz, 10 Hz, 1 Hz, and 0.1 Hz which are interrupted by manual reset; 10 kHz to 10 MHz available continuously in all functions; 1 kHz available continuously for all functions except 100K period average; stability same as internal time base; 5 volts p-p rectangular wave with 1000 ohm source impedance at 1 MHz and lower; 1 volt rms sine wave with 1000 ohm source impedance only at 10 MHz.

Front Panel: 0.1 Hz to 1 MHz in decade steps; selected by Time Base switch; availability as defined under Output Frequencies above; stability same as internal time base; 1 v p-to-p.

External Standard Frequency: 1 MHz, 1 volt, rms, into 1000 ohms required at rear panel BNC connector.

GENERAL

Registration: 8 digits in-line with rectangular Nixie® tubes and display storage; 99,999,999 maximum display; total width of 8 digit display including illuminated units annunciator and auto-positioned decimal point indication does not exceed 7 inches.

*Trigger error is less than ±0.3% of one period ÷ periods averaged for signals with 40db or better signal-to-noise ratio.

** After 72 hours of continuous operation.

Table 1-1. Specifications (cont'd)

GENERAL (continued)

Display Storage: Holds reading between samples; switch overrides storage.

Sample Rate: Time following a gate closing during which the gate may not be reopened is continuously variable from less than 0.2 sec to 5 seconds in frequency mode, independent of gate time; display can be held indefinitely.

Operating Temperature Range: -20°C to +65°C.

Connectors: BNC type except for BCD output and power cable.

Signal Input:
Maximum Sensitivity - 100 mv rms.
Attenuation - Step attenuator provides ranges of 0.1, 1, and 10 volts rms.
Trigger Level Adjustment - Front panel control has ± 0.3 volt trigger level range on 0.1 volt position, ± 3 volt range on 1 volt position, and ± 30 volt range on 10 volt position. A preset position automatically centers trigger level at zero volts for all positions of attenuator.
Impedance - 1 megohm in parallel with approximately 25 pf, all ranges.
Coupling - ac or dc, separate BNC connectors. AC coupling has 600 vdc, 0.022 μf capacitor (-3 dB at approximately 7 Hz).
Overload Protection - Diode clamps protect input circuit for up to 120 volts rms on 0.1 volt range, 250 volts rms on 1 volt range, and 500 volts rms on 10 volt range. Input resistance under overload conditions (approximately ten times minimum sensitivity) will be greater than 100K ohms on 0.1 volt range, and approximately 1 megohm on other ranges.

Time Base External Input (Front Panel):
Maximum Sensitivity - 100 mv, rms.
Impedance - 10K ohms, approximately 20 pf. DC coupled.
Overload - Diode clamps protect input circuit for up to 120 volts, rms.

Output:
4-line BCD 1-2-2-4, "1" state positive. 4-line BCD 1-2-4-8, available as Option 02 ("1" state positive) and Option 03 ("1" state negative).
"0" State Level: -8v.
"1" State Level: +18v.
Impedance - 100K, each line.
Reference Levels:
Approximately +17v, 350 ohm source.
Approximately -6.5v, 1000 ohm source.
Output is suitable for systems use or output devices such as hp Model 580A and 581A Digital-to-Analog Converters and includes the decimal point and measurement unit for hp 562A Digital Recorder.
Print Command - +13v to 0v step, dc-coupled.
Cable Connector - Amphenol 50-pin 57-30500, 1 required.

Hold-off Requirement - +15v min., +25v max. from chassis ground (1000 ohm source).

Weight - Net 32 lbs (14,4 kg) with blank plug-in; shipping, 40 lbs (18,2 kg).

Power Supply - 115 or 230 volts ± 10%, 50 to 60 Hz; 95 watts (50 to 1000 Hz operation, special order).

Accessories Furnished - hp 10503A Cable, 4 feet long, male BNC connectors. Detachable power cord, 7-1/2 ft (2040 mm) long, NEMA plug. Circuit Board Extender.

Dimensions:

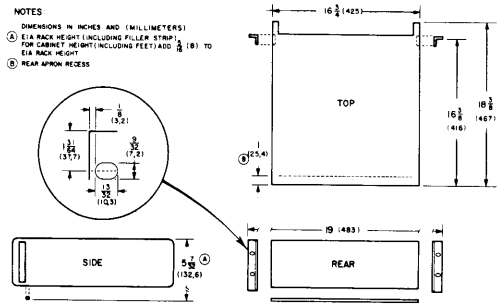

OPTIONAL AND SPECIAL FEATURES

Option 02: 4-line BCD 1-2-4-8, "1" state positive in lieu of 1-2-2-4 (identical in other respects to above Output data) for digits only.

Option 03: 4-line BCD 1-2-4-8, "1" state negative in lieu of 1-2-2-4 (identical in other respects to above Output data) for digits only.

Remote Operation: All functions which may be programmed from the front panel controls (in normal use) may be programmed from a remote location except for the "Sample Rate" (as defined above) and the sensitivity control setting. The instrument provides (through rear panel connectors) all voltages necessary for remote control. The programming voltages for Time Base and Function control are low level, -15 volts dc at 5 ma per gate. Control may also be achieved by using an external -15 volt dc supply. The position of the decimal point and measurements unit may be correctly illuminated from the remote location, using +170 volts dc from the internal or an external supply.

Cable Connector: Amphenol 36-pin 57-30360, 2 required.

SECTION II
PRINCIPLES OF OPERATION

2-1. INTRODUCTION.

2-2. This section describes how the Model 5245L operates. Basic circuits used in the counter are described first (Paragraphs 2-3 through 2-24). Operation of decimal counters and decade dividers is thoroughly discussed in Paragraphs 2-25 through 2-35. A discussion of basic counter functions is given next (Paragraphs 2-36 through 2-43). Pulse timing circuits and overall operation of the entire counter are discussed in Paragraphs 2-44 through 2-50. At the end of the section each assembly is described in order of its assembly designation (A__) (Paragraphs 2-51 through 2-122.)

2-3. THE DIODE.

2-4. GENERAL. Semiconductor diodes are used in signal-handling circuits and in power supply rectifier and regulator circuits.

2-5. THE "OR" GATE. Two or more diodes are sometimes used as an OR gate. The OR gate is a multiple-input circuit which requires only one input to produce an output. Figure 2-1A shows some OR gate configurations.

2-6. THE "AND" GATE. The AND gate or coincidence circuit is a multiple-input circuit which requires the presence of all input signals to produce an output. Figure 2-1B shows an AND gate configuration in which an input signal is passed only when a properly polarized control voltage is applied.

2-7. THE "INHIBIT" GATE. The signal normally passes through an INHIBIT gate; adding a second signal closes the gate and prevents the signal from going through. One of the most common forms of the INHIBIT gate is the series gate shown in Figure 2-1C. If the diode is biased off, the gate is closed, and pulses do not reach the decade divider or decimal counter; when the diode is biased on, the pulses go through the gate and reach the decade divider or decimal counter.

2-8. LIMITER OR CLIPPER. The limiter or clipper is a circuit which removes positive or negative peaks of waveforms. It can be used either as a waveform shaping circuit or as a protective device to prevent excessive voltages from reaching a sensitive circuit. Figure 2-1D shows a limiter which prevents the negative peak of a pulse from going more negative than about -0.6 volt. Note that for a conducting silicon diode the cathode voltage is about 0.6 to 0.8 volt more negative than the anode.

2-9. CLAMPER OR DC RESTORER. The clamper or DC restorer is a circuit which establishes either the positive or negative peak of a waveform at a particular DC reference voltage; in other words, it provides a definite baseline voltage for the waveform. Figure 2-1E shows a clamper which provides a baseline of about +20 volts for a negative pulse.

2-10. REGULATOR. A diode regulator uses either the constant reverse-bias breakdown voltage characteristic of a breakdown diode or the constant forward-bias voltage drop characteristic of a silicon diode. Power supply reference voltages are generally provided by breakdown diodes which maintain a constant voltage when supplied with a reverse-bias voltage greater than their specified breakdown voltage. Regulated voltages can also be provided by a forward-biased silicon diode which maintains a constant 0.6 to 0.8 volt drop. Figure 2-1F shows connections for both types of diodes.

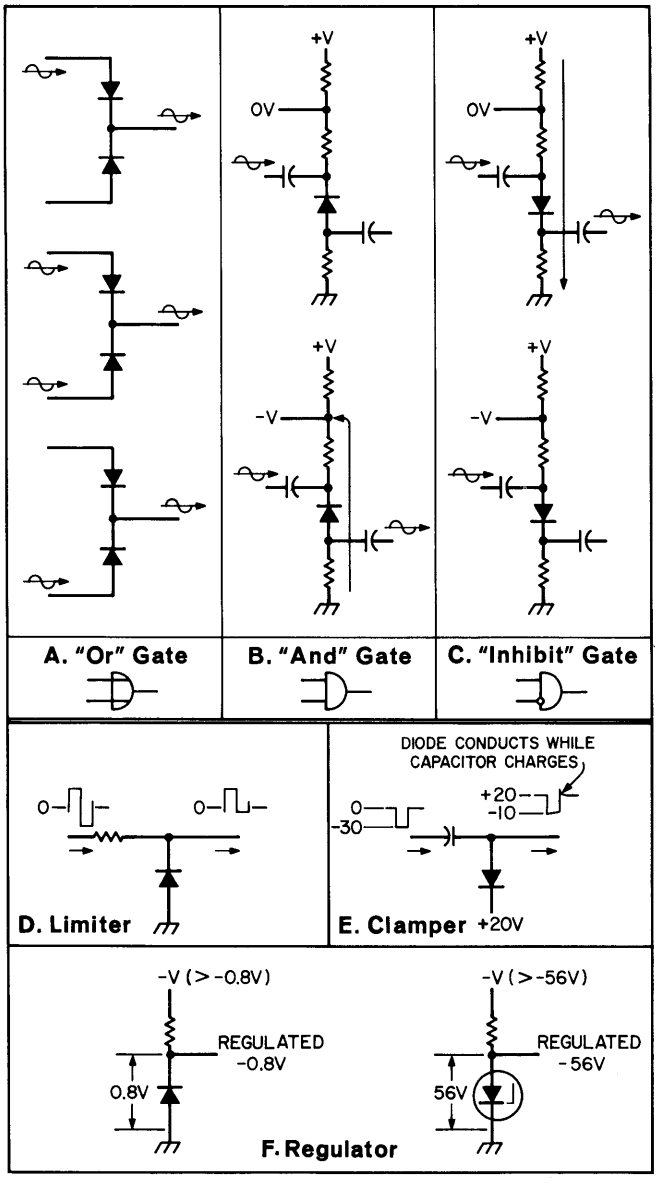

Figure 2-1. Basic Diode Circuits

2-11. THE TRANSISTOR.

2-12. GENERAL. Transistors are used throughout the counter in circuit configurations such as the amplifier, the flip-flop or binary, the trigger circuit, and the one-shot multivibrator. In the following paragraphs, basic transistor operation and a few basic transistor circuits are discussed. These paragraphs discuss the easily observed changes in currents and voltages in transistor circuits which help technicians locate circuit faults but do not attempt to describe how transistors work internally.

2-13. BIASING AND CONDUCTION. Vacuum tubes and transistors are functionally similar. In the tube a small grid-to-cathode voltage controls a larger plate-to-cathode current flow. In a transistor a small base-to-emitter current controls a large collector-to-emitter current. A comparison of basic vacuum tube, NPN transistor, and PNP transistor operation is shown in Figure 2-2A; indicated current represents conventional flow of positive charges external to the transistor and is not intended to indicate flow of carriers inside the transistor structure. Notice that the effect of emitter-base-collector voltages is totally reversed between NPN and PNP transistors; circuits which are arranged for an NPN transistor usually function normally for a PNP transistor if supply voltages are reversed.

2-14. AMPLIFIERS. As with vacuum tubes, three basic amplifier types are available (Figure 2-2A). These amplifiers may be used alone or in combination to form complex circuits.

2-15. FLIP-FLOP. The flip-flop is a bi-stable two-transistor circuit in which one transistor conducts, holding the other cut off. Each input pulse causes a reversal of states; that is, the cut off transistor is turned on and the conducting transistor is cut off. In the flip-flop shown in Figure 2-3A, Q1 is initially conducting heavily; its collector voltage is only slightly negative; a near-zero voltage is supplied to the base of Q2 (junction of R27-28 divider). The voltage drop across R24 produces a sufficiently negative voltage at the emitter of Q2 to hold Q2 cut off. With Q2 cut off the R18-R19-R20 divider delivers a negative voltage to the base of Q1 to keep it conducting.

2-16. At time t_1 the positive input pulse cuts off Q1; the Q1 collector voltage goes negative and drives Q2 into conduction (R27-R28 divider to Q2 base); the Q2 collector voltage and the Q1 base voltage (R19-R20 divider) then become considerably less negative, permitting Q1 to remain cut off. The R26-R27-R28 divider delivers a sufficiently negative voltage to the base of Q2 to drive it into conduction. In a similar manner the positive input pulse at time t_2 cuts off Q2 and starts a sequence of events which ends with Q1 conducting and Q2 cut off. Note that a positive input pulse has no effect on Q1 if it is already cut off. A negative reset pulse applied to the base of Q1 returns the flip-flop to its initial condition (Q1 conducting, Q2 cutoff). The diode CR9 removes the negative pulse from the differentiated square wave input. Without this diode, the negative pulse would drive Q1 which is cut off and the stage would switch from one state

A. Amplifier Characteristics

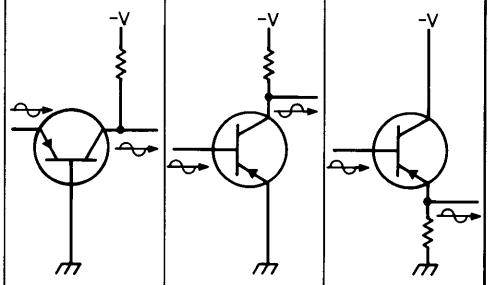

CHARACTERISTIC	COMMON BASE	COMMON EMITTER	COMMON COLLECTOR
Input Impedance	30Ω-50Ω	500Ω-1500Ω	20KΩ-500KΩ
Output Impedance	300KΩ-500KΩ	30KΩ-50KΩ	50Ω-1000Ω
Voltage Gain	500-1500	300-1000	<1
Current Gain	<1	25-50	25-50
Power Gain	20dB-30dB	25dB-40dB	10dB-20dB (Emitter Follower)

B. Transistor Biasing

TYPE	CUTOFF	CONDUCTION
NPN COLLECTOR BASE EMITTER	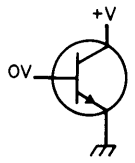	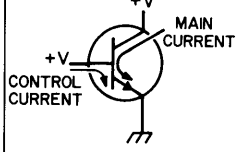
PNP COLLECTOR BASE EMITTER	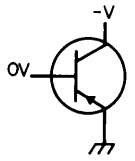	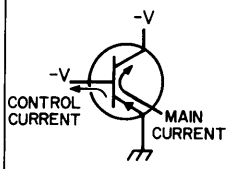

Figure 2-2. Transistor Operation

to the other but would not divide by two. The AC coupling through C2 and C3 insures fast switching. The DC coupling through R19 and R27 insures bistable characteristics.

2-17. BINARY CIRCUIT. In this manual a flip-flop which completes its operating cycle and produces an output pulse after receipt of two similar input pulses is called a binary circuit, since it is a counting device in a binary system. The binary circuit is driven from a single input which is connected either through a pair of resistors or through a pair of gating diodes to each transistor base.

2-18. TRIGGER CIRCUIT. The trigger circuit is a limiter or squaring circuit which produces an output waveform with very fast rise and fall times. The

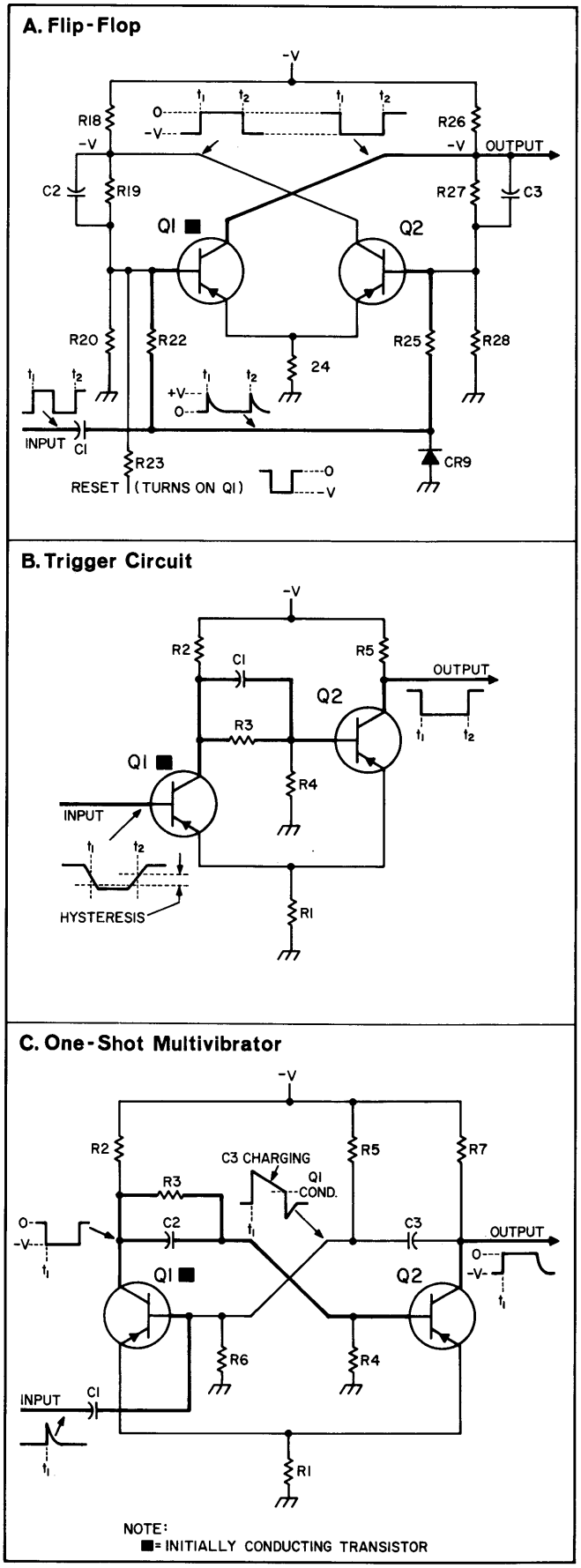

Figure 2-3. Basic Transistor Circuits

trigger circuit is similar to the flip-flop except that the RC network in one half is replaced by the input signal. Capacitor C1 bypasses R3 to couple fast changes in voltage at the Q1 collector to the base of Q2. Either Q1 or Q2 can conduct depending on the voltage at the input. Note that there is a slight difference in input voltage (**called hysteresis**) between switching with a negative-going input (time t_1) and switching with a positive-going input (time t_2).

2-19. ONE-SHOT MULTIVIBRATOR. The one-shot multivibrator is a circuit which generates a pulse of some specified duration following the application of a suitable triggering pulse. The circuit is similar to the flip-flop except one DC coupling path has been removed so the circuit is stable only in the state with Q1 conducting.

2-20. In the typical one-shot multivibrator shown in Figure 2-3C the following conditions exist during the initial stable period: the R5-R6 divider delivers a sufficiently negative potential to the base of Q1 to hold Q1 in saturation; the Q1 collector and Q1 emitter are therefore slightly negative; the R3-R4 divider delivers the Q2 base an even smaller negative voltage to hold Q2 cut off.

2-21. The positive triggering pulse at time t_1 reduces conduction of Q1; the resulting negative-going voltage at the Q1 collector is applied to the Q2 base through the R3-R4 divider (C2 bypasses R3 to provide coupling for the rapidly changing voltage at the Q1 collector); Q2 begins to conduct; the resulting positive-going change in Q2 collector voltage is coupled through C3 to the Q1 base to further decrease Q1 conduction. The process is regenerative and quickly results in Q1 being cut off and Q2 being saturated.

2-22. Capacitor C3 now charges at a rate mainly determined by the values of R6 and C3 (main charge path: R1-Q2-C3-R5). When the Q1 base voltage becomes sufficiently negative, Q1 begins conduction; the resulting positive-going Q1 collector voltage is coupled to the Q2 base; the Q2 collector voltage goes negative and is coupled through C3 to the Q1 base to further increase Q1 conduction. The process is regenerative and ends with the circuit in its original quiescent state, Q1 saturated and Q2 cut off.

2-23. FIELD EFFECT TRANSISTOR (FET). Field effect transistors have three terminals: source, drain, and gate which correspond in function to emitter, collector, and base of junction transistors. Source and drain leads are attached to the same block (channel) of N or P semiconductor material. A band of oppositely doped material around the channel (between the source and drain leads) is connected to the gate lead.

2-24. In normal FET operation, the gate-source voltage reverse-biases the PN junction, causing an electric field that creates a depletion region in the source-drain channel. In the depletion region the number of available current carriers is reduced as the reverse-biasing voltage increases, making source-

drain current a function of gate-source voltage. With the input (gate-source) circuit reverse-biased, the FET presents a high impedance to its signal sources (as compared with the low impedance of the forward-biased junction transistor base-emitter circuit). Because there is no input current, FET's have less noise than junction transistors. Figure 2-4 shows the schematic symbol and biasing for N channel and P channel field effect transistors.

A. FET Amplifier Characteristics

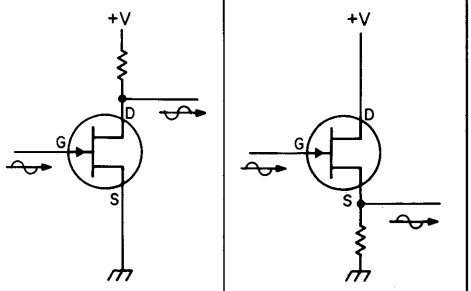

CHARACTERISTIC	COMMON SOURCE	COMMON DRAIN (Source Follower)
Input Impedance	IMΩ-15MΩ	IMΩ-15MΩ
Output Impedance	50KΩ-100KΩ	IKΩ-10KΩ
Voltage Gain	10-200	<1
Power Gain	60dB-100dB	40dB-80dB

B. FET Biasing

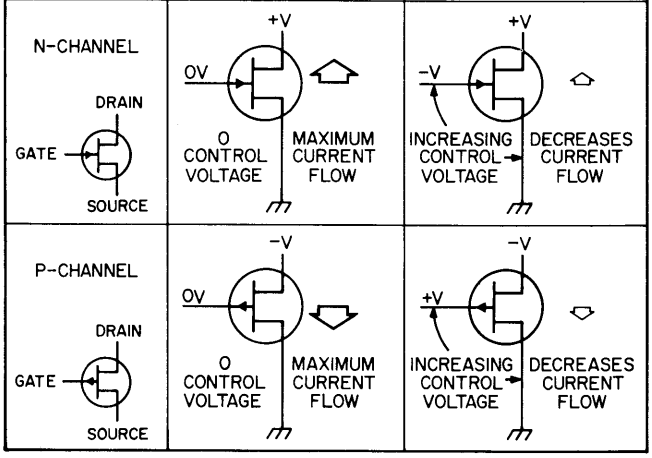

Figure 2-4. Field Effect Transistor Operation

2-25. BASIC OPERATION OF DECIMAL COUNTER OR DECADE DIVIDER

2-26. INTRODUCTION. Operation of the decimal counter circuit and the decade divider circuit is similar. The difference between the two is in function. Decimal counter circuits divide the input signal by 10 and actuate the digital display tubes, whereas the decade divider circuits are used to divide the input signal or the output of the internal oscillator into the frequencies to be counted or frequencies to provide the various gate times. Throughout the following discussion, circuits are referred to as "counters" though the description applies equally to decade dividers. Paragraphs 2-25 through 2-29 cover general operation of the counters with emphasis on counting logic; Paragraphs 2-30 through 2-32 discuss readout circuits; and Paragraphs 2-73 through 2-86 discuss specific decimal counter assemblies and the readout assembly.

2-27. INPUT AND OUTPUT FROM BINARY. Figures 2-5A and 2-5B show a flip-flop connected for operation as a binary circuit (basic flip-flop operation is discussed in Paragraphs 2-15 and 2-16). Positive input pulses go to the bases of both transistors and cause switching by cutting off the conducting transistor. Negative reset pulses go to the base of one transistor and turn it on. Note the letter "A" near one transistor and "$\overline{A}$" (read as "A bar" or "not A") near the other. The positive-going transition at the collector of the $\overline{A}$ transistor (while switching from A conducting to $\overline{A}$ conducting) provides the input to the next binary circuit.

2-28. CIRCUIT ARRANGEMENT AND COUNT NOTATION. Figure 2-5C is a block diagram of a typical four-binary decimal counter. Notice that the $\overline{B}$ output is applied to the D, $\overline{D}$, and $\overline{C}$ transistors and that the $\overline{D}$ output is applied only to the C transistor. Each input pulse produces a different combination of conducting and cut-off stages; there are only 10 allowable combinations and each combination represents a decimal digit. Decimal weighting is the decimal value assigned, arbitrarily, to the output of a pair when the plain-letter transistor is conducting.

a. Decimal Count. Decimal weighting used in the Model 5245L counter is shown in Figure 2-5C, immediately above each of the four binary stages. The decimal weight each pair represents is present only when the plain-letter side (A, B, D, or C) is conducting; when the barred-letter side ($\overline{A}$, $\overline{B}$, $\overline{D}$, or $\overline{C}$) is conducting, the decimal weight is zero. The decimal count can be determined by adding the decimal weighting of the four stages. For example, if the A, $\overline{B}$, D, and C transistors are conducting, where A=1, $\overline{B}$ = 0, D = 4, C = 2, the output is 1 + 0 + 4 + 2 = 7.

b. Binary-coded Decimals. In binary-coded decimal notation, the output is either 1 (when the plain-letter transistor is conducting) or 0 (when the barred-letter transistor is conducting). In binary-coded decimal notation, the order of the binaries is given so that binary-coded decimals can be written with the least significant digit to the right. Thus in the system used in the Model 5245L, the binary-coded decimal notation normally is given in the order DCBA. (Counter binaries are shown in the ABDC order on the schematics and in Figure 2-5C to increase clarity in showing signal flow.) For the decimal count of 7 used as an example in Paragraph a, with D = 1, C = 1, $\overline{B}$ = 0, A = 1, the binary-coded-decimal number would be 1101.

2-29. SEQUENCE. Figure 2-6 shows the counting sequence for a typical decimal counter. Initially each binary is in the "0" (reset) state (decimal count = 0, DCBA = 0000). The following action takes place when a series of input pulses is applied to the counter.

a. The first pulse switches A to the "1" state (DCBA = 0001 = 0 + 0 + 0 + 1 = 1).

b. The second pulse switches A to the "0" state; the output from $\bar{A}$ causes B to switch to the "1" state (DCBA = 0010 = 0 + 0 + 2 + 0 = 2).

c. The third pulse switches A to the "1" state (DCBA = 0011 = 0 + 0 + 2 + 1 = 3).

d. The fourth pulse switches A to the "0" state; the output from $\bar{A}$ switches B to the "0" state; the output from $\bar{B}$ switches both D and C to the "1" state; the resulting signal from C is applied to $\bar{B}$ and D to return B to the "1" state and D to the "0" state (DCBA = 0110). Although $\bar{D}$ is connected to C, no switching occurs at C as a result of the final switching of D since C has not fully recovered from its recent switching.

e. The fifth pulse switches A to the "1" state (DCBA = 0111 = 0 + 2 + 2 + 1 = 5).

f. The sixth pulse switches A to the "0" state; the output from $\bar{A}$ switches B to the "0" state; the output from $\bar{B}$ switches D to the "1" state (DCBA = 1100 = 4 + 2 + 0 + 0 = 6).

g. The seventh pulse switches A to the "1" state (DCBA = 1101 = 4 + 2 + 0 + 1 = 7).

h. The eighth pulse switches A to the "0" state; the output from $\bar{A}$ switches B to the "1" state (DCBA = 1110 = 4 + 2 + 2 + 0 = 8).

i. The ninth pulse switches A to the "1" state (DCBA = 1111 = 4 + 2 + 2 + 1 = 9).

j. The tenth pulse switches A to the "0" state; the output from $\bar{A}$ switches B to the "0" state; the output from $\bar{B}$ switches D to the "0" state; the output from $\bar{D}$ switches C to the "0" state (DCBA = 0000). When C becomes "0", $\bar{C}$ produces an output pulse which serves as a carry pulse to a following decimal counter assembly. The counter is now returned to its original count.

2-30. RESETTING TO ZERO. The reset pulse, (negative) is applied to the base of the "0" state transistors ($\bar{A}$, $\bar{B}$, $\bar{D}$, $\bar{C}$) in each binary circuit. If the "0" state transistor is conducting, the pulse has no effect; if the "0" state transistor is not conducting, the pulse turns it on. Thus the reset pulse ensures that all four "0" state transistors are conducting. Figure 2-7 indicates a decimal counter assembly receiving a reset pulse. The counter is in the decimal "4" state (DCBA 0110) and the reset pulse returns the decimal counter assembly to the decimal "0" state (DCBA 0000). Decade dividers can be reset as required to any desired state, since reset inputs are available at each transistor. Note the difference between a regular input pulse and a reset pulse: a regular input signal is positive, and causes a conducting transistor to cut off; a reset pulse is negative, and causes a cut-off transistor to conduct.

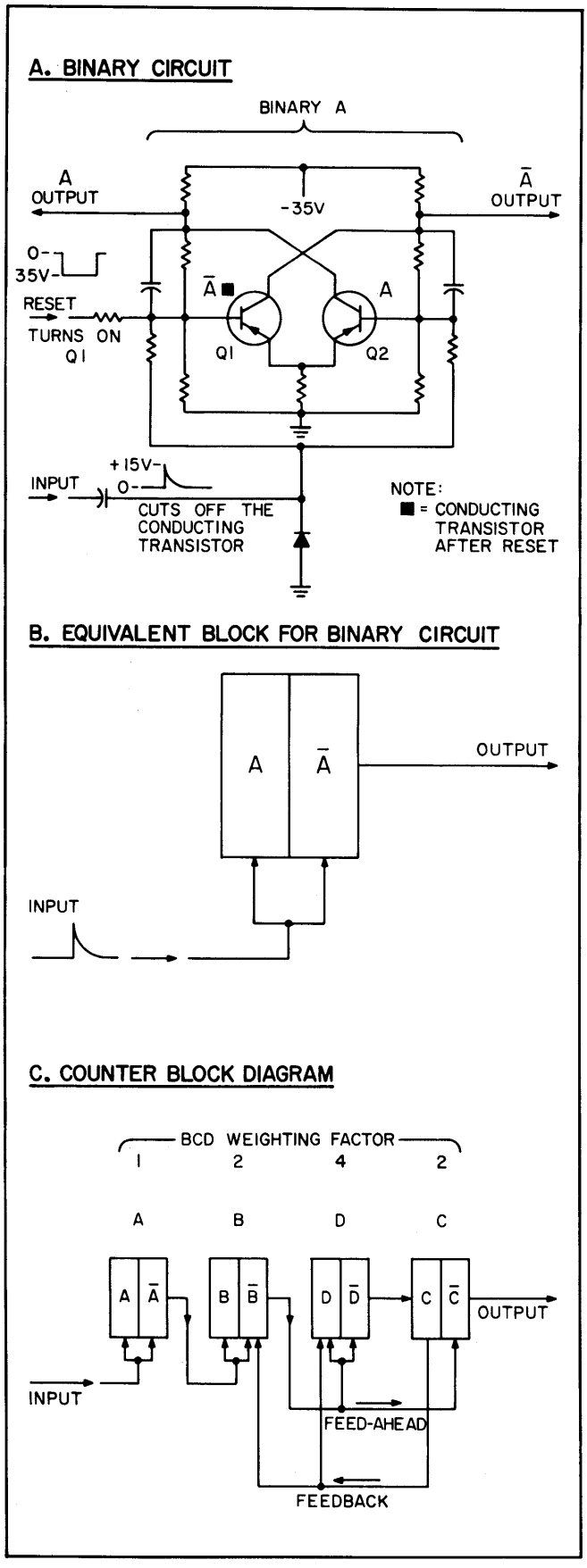

Figure 2-5. Basic Four Binary Counter

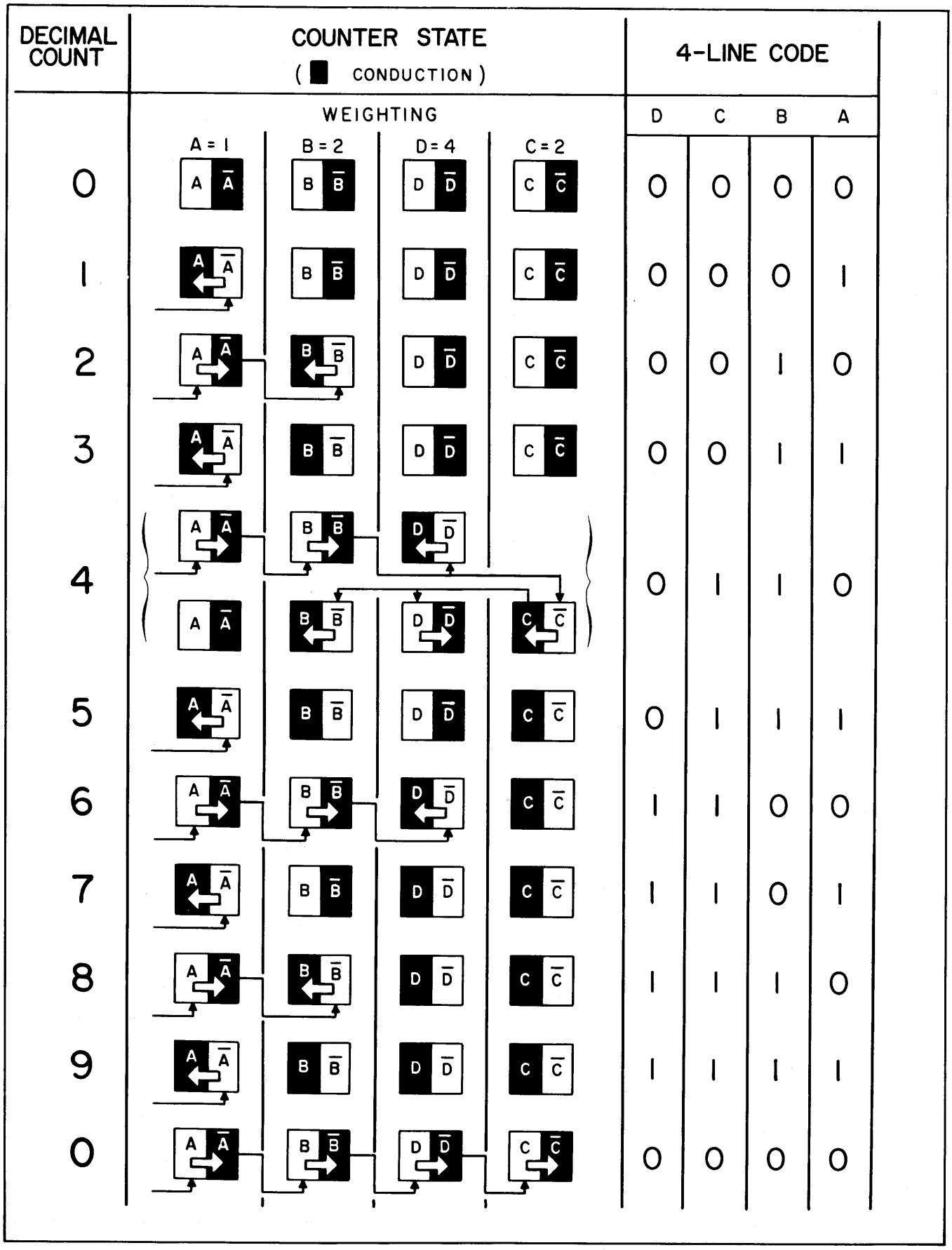

Figure 2-6. Counting Sequence of Four Binary Counter

2-31. Waveforms showing time relationships for the counter are given in Section VII; remember that a driven binary switches only when the input wave is going positive. (Diode clipping removes negative portion of input).

2-32. ELECTRICAL READOUT. A four-line binary-coded-decimal output is available from each decimal counter assembly. A voltage representing the state of each binary is taken from the collector of each of the plain-lettered transistors (A, B, C, and D). A binary "9" is represented by a relatively positive voltage on each line, and a binary "0" is represented by a relatively negative voltage on each line. Table 2-1 summarizes the ten allowable combinations which represent the decimal digits "0" through "9". To protect the binary circuit from being affected by the load, each output line includes a 100K ohm series-connected isolation resistor.

Table 2-1. Four-Line Code Truth Table

Digit	4-Line Code, 0 = negative state 1 = positive state			
	D	C	B	A
0	0	0	0	0
1	0	0	0	1
2	0	0	1	0
3	0	0	1	1
4	0	1	1	0
5	0	1	1	1
6	1	1	0	0
7	1	1	0	1
8	1	1	1	0
9	1	1	1	1

2-33. DIGITAL DISPLAY. A display matrix, consisting of eight neon input lamps and 18 photoconductive elements is used to convert the binary-coded-representation to a digital representation. The display matrix is shown in the Decimal Counter schematics, Figures 7-9, 7-11, and 7-14.

2-34. As indicated in the schematic diagrams, Figures 7-9, 7-11, and 7-14, the circuit to each numeral in the display is brought through three series-connected photocell elements. A characteristic of the photocell element is that it is a high resistance element (several megohms) when dark and a relatively low resistance element (less than 7000 ohms) when illuminated. Thus when the three photocell elements which constitute a circuit path are illuminated, resistance drops to about 20,000 ohms and sufficient current can flow to light the display digit. Illuminating elements for the photocells are neon lamps, one of which is connected in the collector circuit of each of the eight transistors in the counting circuit; the lamp lights when the transistor conducts. As explained in Paragraph 2-30, a four-binary counting circuit has ten states, ten combinations of conducting and nonconducting transistors, each combination corresponding to one digit. Thus there is a pattern of lighted lamps for each digit. Assigning a binary weight of 1 when the plain-letter lamp (A, B, C, or D) lights, and a weight of 0 when the bar lamp ($\bar{A}$, $\bar{B}$, $\bar{C}$, or $\bar{D}$) lights, the lamp pattern for any digit can be determined from Table 2-1. Figure 7-9 shows the counting circuit with transistors D, C, $\bar{B}$, $\bar{A}$ conducting. The lamps associated with these circuits illuminate the photocell elements in the circuit to the digit 0 display.

2-35. The circuit sequence required to light a lamp is discussed in the following paragraphs. The sequence discussed will have more meaning if it is remembered 1) that a much higher voltage is required to fire a neon lamp than to maintain illumination in the lamp (for the lamps used in the Model 5245L, 70 volts for firing and 55 volts for maintaining illumination), and 2) that after application of the firing voltage the lamp cannot fire immediately because of the time required for ionization. Arrangement of the binary lamp circuit used in the Model 5245L is indicated in Figure 2-8B. As will be discussed later, diodes connected between the lamps make it possible for the circuit to store a previous count even though the binaries are switching during the next counting period. In decimal counter assemblies which do not have this storage feature, the display changes with each step the binaries take in setting up the circuit for a given digit. To clarify certain aspects of the lamp circuit sequence, the lamp circuit will first be discussed as though there were no diodes between the two lamps of a binary; this circuit is shown in Figure 2-8A.

a. Lamp Circuit without Diodes.

(1) As indicated in Figure 2-8A-1, the lamp associated with the conducting transistor is

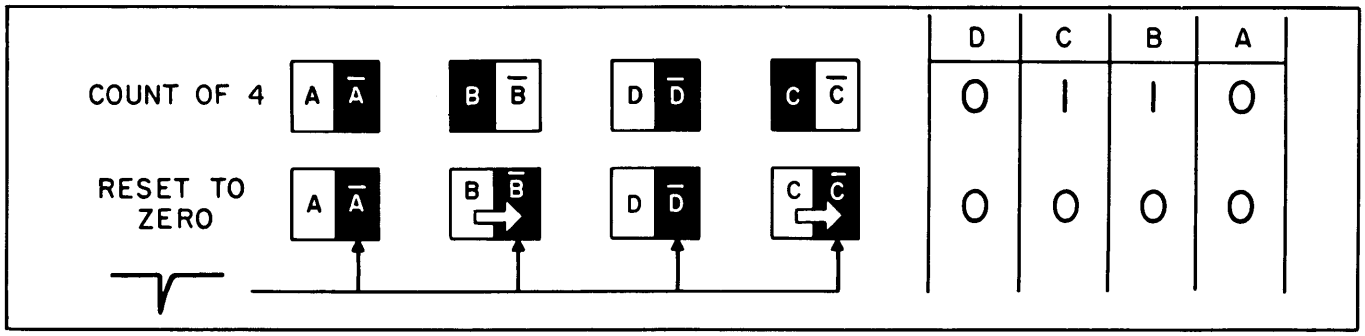

Figure 2-7. Typical Reset Operation in Four-Binary Decimal Counter Assembly

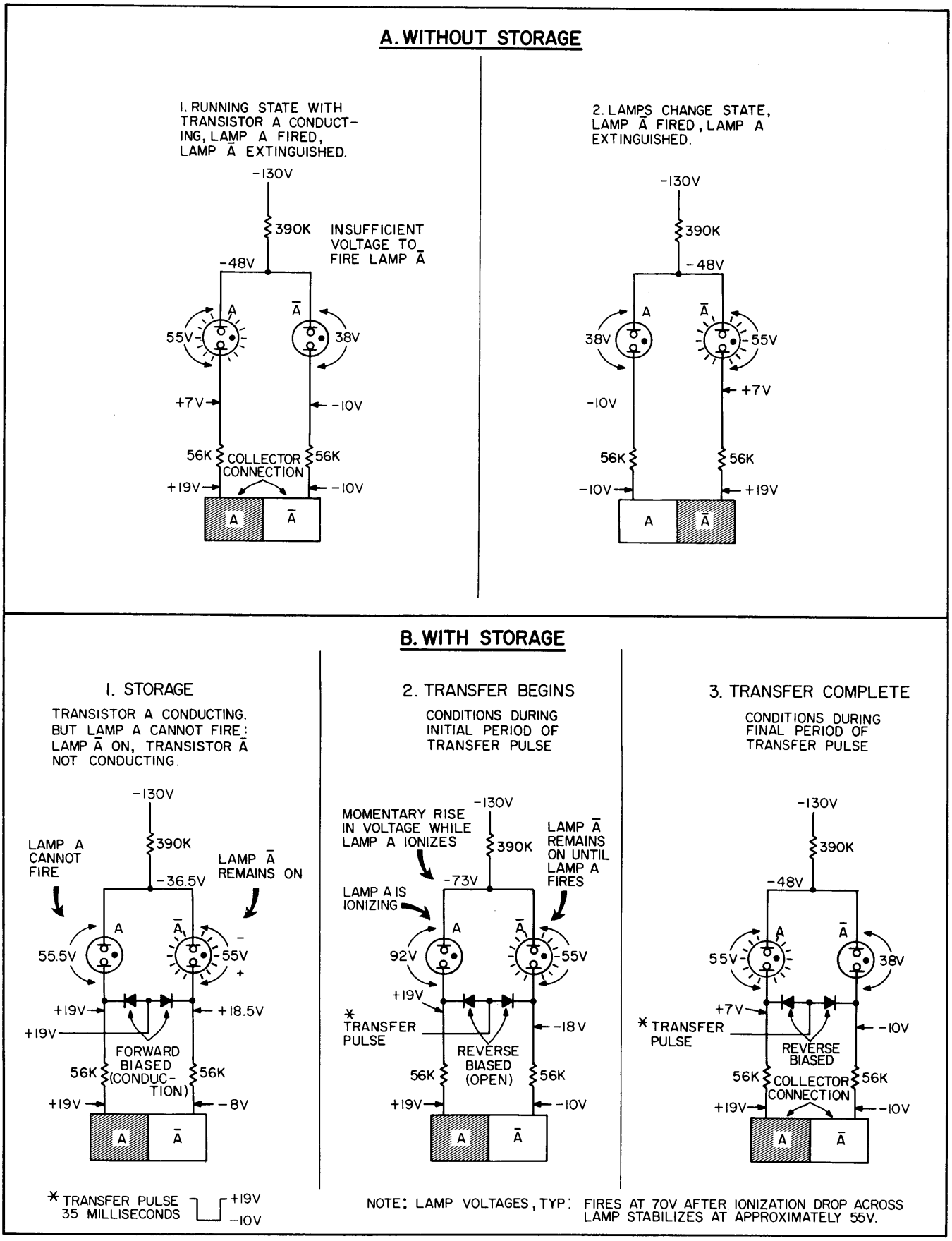

Figure 2-8. Lamp Control

lighted, the lamp associated with the nonconducting transistor is dark. Typically, voltages will be as shown. Since the transistor associated with the dark lamp is not conducting, no current is flowing in the circuit of the dark lamp, and voltage across it is established (a) by the circuit of the conducting lamp and its transistor, and (b) by the voltage on the collector of the non-conducting transistor. This voltage is not high enough to fire the dark lamp.

(2) When the binary shown in Figure 2-8A changes state, the voltage on the collector of transistor $\overline{A}$ (now conducting) drops to -10 volts, while the voltage on the collector of nonconducting transistor A rises to +19 volts. With transistor A turned off, current through lamp A decreases, and the voltage at the junction of the two lamps rises. Since lamp $\overline{A}$ cannot fire until ionized, voltage will continue to rise until the 70-volt firing level is reached; the junction will reach approximately 73 volts during the ionization period. After the dark lamp fires, the voltage across it stabilizes at about 55 volts, and since the voltage across the other lamp is now reduced to 38 volts, the other lamp extinguishes.

(3) Circuit state after lamp $\overline{A}$ has fired is shown in Figure 2-8A-2; it is the mirror image of that shown in Figure 2-8A-1.

b. Lamp Circuit with Diodes. The steady, or storage, state of the lamp circuit is indicated in Figure 2-8B-1. The diodes are forward-biased, effectively connecting the lamps in parallel and clamping them to approximately -1.5 volts. One lamp is conducting, the other lamp is dark. Since both lamps are clamped to -1.5 volts, regardless of the state of the binary, there will never be sufficient voltage across the dark light to fire it and it will remain dark until 1) the diodes are reverse-biased and 2) there is conduction through the transistor in whose collector circuit the lamp is connected.

(1) When the gate closes at the completion of the counting period (see Paragraph 2-95) a -29 volt transfer pulse (see Paragraph 2-99) is applied to the binary diodes, reverse-biasing them. With the diodes reverse-biased, the lamps are disconnected from each other, and the circuit for each lamp is now completed through its associated transistor.

(2) If the state of the binary is the same as that at the end of the previous counting period, the lamps "see" the voltages required to maintain them without change. If, however, the digit is such that the binary state is changed, the lamps change state. With the diodes reverse-biased, circuit action is the same as that described in subparagraph a. Condition of the circuit during the initial period of the transfer pulse when voltage across the dark lamp is increasing is indicated in Figure 2-8B-2; circuit condition after the lamp has fired is indicated in Figure 2-8B-3.

c. Disabling the Storage. When the function selector is set to MANUAL or the STORAGE switch on the rear panel is in the off position, the storage feature is disabled. Circuit action is then described in subparagraph a.

2-36. BASIC COUNTER FUNCTIONS.

2-37. GENERAL.

a. The basic counter circuits are arranged to provide several functional modes of operation. Each arrangement includes a main AND gate with 1) a signal input and 2) a control input, or gating signal. Following the main gate is a cascaded series of decimal counters which accumulate and display the total number of pulses which pass through the main gate. The various modes of operation are discussed in Paragraphs 2-36 through 2-41.

b. Circuit sequence in the various modes of operation is similar: pulses pass through the main gate to the decimal counters for a predetermined time, are counted and displayed. The difference between arrangements is in 1) the source of the pulses counted, and 2) the source of the gating signal which establishes the length of time during which the main gate is open to pass pulses to the decimal counters.

2-38. TOTALIZING. In the totalizing mode (see Figure 2-9A), the gate flip-flop is controlled by the FUNCTION switch when it is in the MANUAL START or MANUAL STOP positions. The decimal counters count the total number of input pulses applied while the main gate is held open with the FUNCTION switch in the MANUAL START position. Switching the FUNCTION switch to the MANUAL STOP position closes the main gate and the number of pulses which came through the main gate while it was open are displayed.

2-39. FREQUENCY MEASUREMENT. The circuit arrangement shown in Figure 2-9B permits control of the main gate by the counter time base. The gate is opened for a controlled time, therefore the accumulated count represents the number of input cycles or pulses during this time. Controlled intervals are from 10 seconds down to 1 microsecond in decade submultiples, selectable with the front panel TIME BASE switch. The decimal point is automatically positioned and the readout is in kilohertz or megahertz with the units in line with the digital display.

2-40. PERIOD MEASUREMENT. The arrangement shown in Figure 2-9C provides the means for measuring the period of the input signal. The period of a signal is the time required for the completion of one cycle; the counter displays the time in seconds, milliseconds or microseconds. The period measurement is obtained by making the duration of the gating signal equal to the period of the input signal, and counting a train of pulses supplied by the counter time base. The displayed count is the number of time-base pulses which occur during one period of the input signal. For multiple period measurements, Figure 2-9D, the input signal is divided by the selected decade factor so that the gating signal is the selected multiple of one

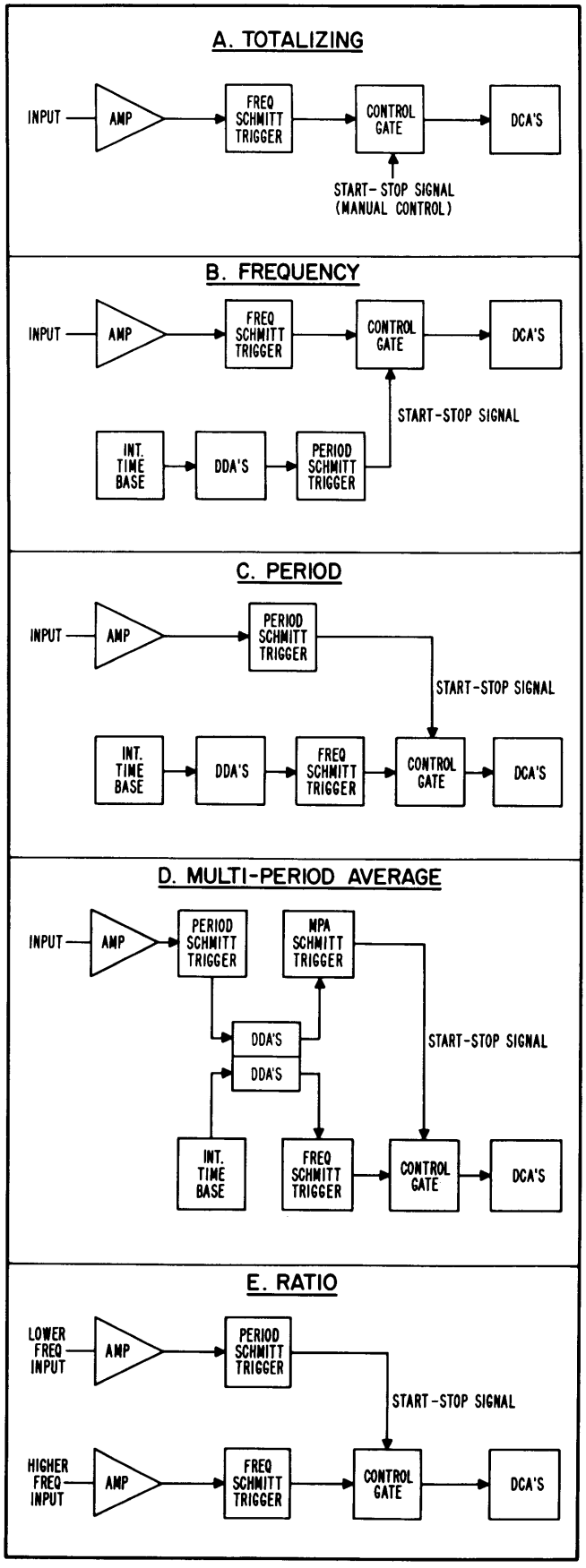

Figure 2-9. Basic Counter Functions

period. The decimal point is positioned to give the readout in seconds, milliseconds or microseconds for a single period of the input signal.

2-41. RATIO MEASUREMENT. As shown in Figure 2-9E, the frequency ratio of two inputs can be measured by a circuit arrangement similar to that used for period measurement. One input signal is applied to the main gate while the gating signal is made equal to the period (or decade multiple of the period) of the other signal. The displayed count represents the number of cycles of one input which occur during the period of one cycle (or decade multiple of one cycle) of the other input.

2-42. STANDARD FREQUENCY OUTPUTS. Multiplier and decade divider circuits connected to the internal 1 MHz oscillator provide output frequencies from 10 MHz to 0.1 Hz (in decade steps) using the arrangement shown in Figure 2-10.

2-43. SCALER OPERATION. An input can be scaled by a factor from 10 to 10^9 (in decade steps) using the arrangement shown in Figure 2-11. Note that the first two divisions are done by the high-speed decimal counters which in this case function as decade dividers.

2-44. TIME SEQUENCE.

2-45. GENERAL. Following a counter measurement there are several operations which occur in a particular sequence. The pulses which control these operations and their time relation to each other are shown in Figure 2-12. The trailing edge of the gating pulse (end of count) triggers the one-shot multivibrators (Paragraph 2-19) which generate these pulses.

2-46. TRANSFER. The transfer multivibrator is triggered at the end of the gating signal, and it produces a 35-millisecond pulse. The transfer pulse is applied to the decimal counters to transfer the new count to the display. During a measurement function the count is stored in the storage binaries until the transfer pulse allows the new count to be displayed.

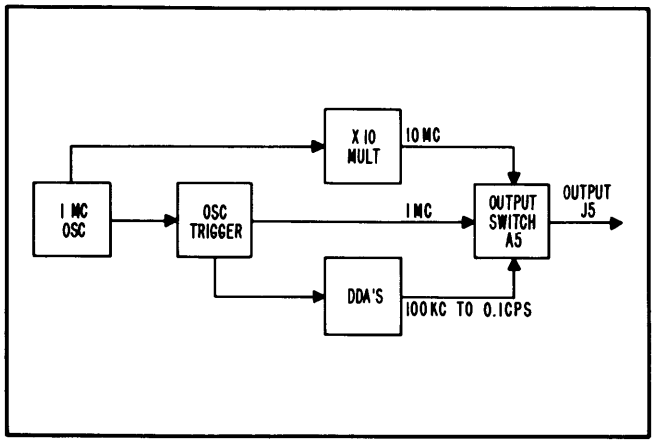

Figure 2-10. Standard Frequency Outputs

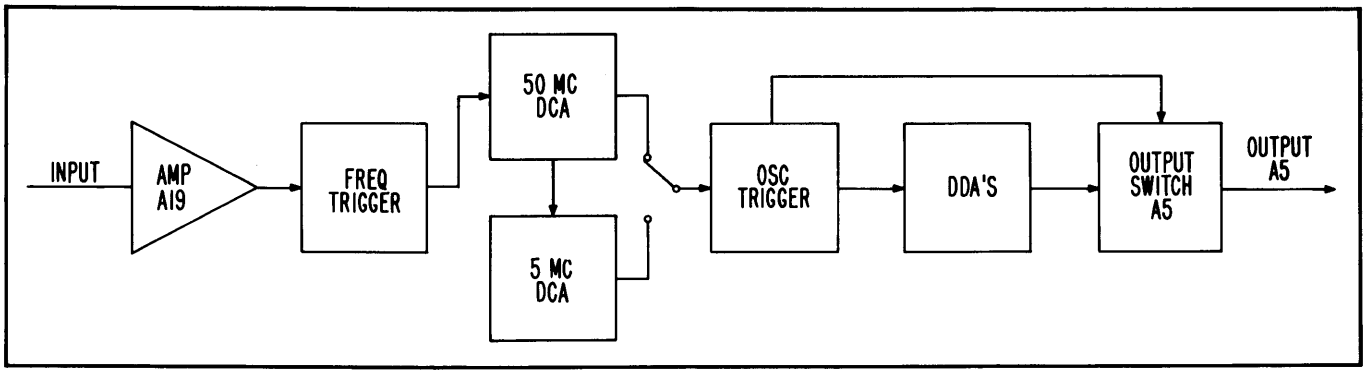

Figure 2-11. Scaler Operation

2-47. SAMPLE RATE. The sample-rate multivibrator is triggered at the leading edge of the transfer pulse; it produces a pulse which may be varied from 55 milliseconds to 5 seconds with the front panel SAMPLE RATE control. The trailing edge of the sample rate pulse is differentiated to operate the reset amplifier. The reset pulse resets the decimal counters and low-frequency decade dividers.

2-48. HOLDOFF. The holdoff multivibrator produces an output pulse which starts at the leading edge of the sample rate pulse and lasts until 55 milliseconds after the end of the sample-rate pulse. The holdoff pulse disables the gate flip-flop to prevent retriggering until the sample rate multivibrator timing capacitor has completed recharging. A sync pulse from the gate control circuit (collector of Q1 through C10 or when in TIME INTERVAL from the start line through CR7 and C11) gives the holdoff pulse a precise length and prevents the gate flip-flop from being triggered prematurely. During the slight delay between the end of the gating pulse and the start of the holdoff pulse, the gate flip-flop is disabled by an inhibit signal from the transfer multivibrator.

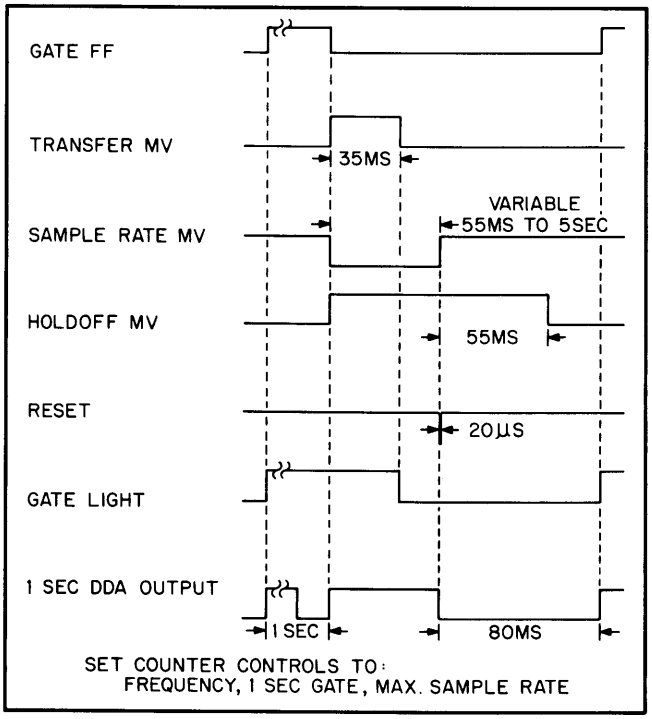

Figure 2-12. Time Sequence

2-49. OVERALL COUNTER OPERATION.

2-50. The entire counter is shown in a logic block diagram in Figure 2-13. The front-panel FUNCTION switch applies a control voltage to selected AND gates in the function control assembly (A21) to arrange circuits for each counter function (see tabulation in Figure 7-2). The front-panel TIME BASE switch arranges the decade dividers (A28-A34) into two groups using gate circuits in the time-base control assembly (A35); the first group produces decade division of the oscillator (A26) output, and the second group produces decade division of the counter input during multiplied period measurements. For details of inter-connections between circuit modules (assemblies) refer to the overall diagram Figure 7-2.

2-51. INPUT SWITCH ASSEMBLY A1.

2-52. The input switch assembly, designated SENSITIVITY (VOLTS RMS) on front panel, is a five-position switch (CHECK, 10, 1, .1, and PLUG-IN). Refer to the schematic diagram, Figure 7-3, for circuit details. Switch functions are listed below.

a. Provides three attenuation steps (X1, X10, X100) for signal applied to the SIGNAL INPUT connector. The attenuator output is connected to the input amplifier A19.

b. Connects output of plug-in unit to input amplifier A19 when switched to PLUG-IN position.

c. Produces gate controls 1, 2, 3, 5, 6, and 27 by combining switched -15 volts from A3 (FUNCTION switch); distinguishes between CHECK and not-CHECK positions.

d. Combines switched -15 volts from A3 to contribute to generation of gate controls 4, 21, 22, 23, 24, 25, 26, 27, 28, and 29; distinguishes between CHECK and not-CHECK positions. Switching for these gate controls is finished in A2 (TIME BASE switch).

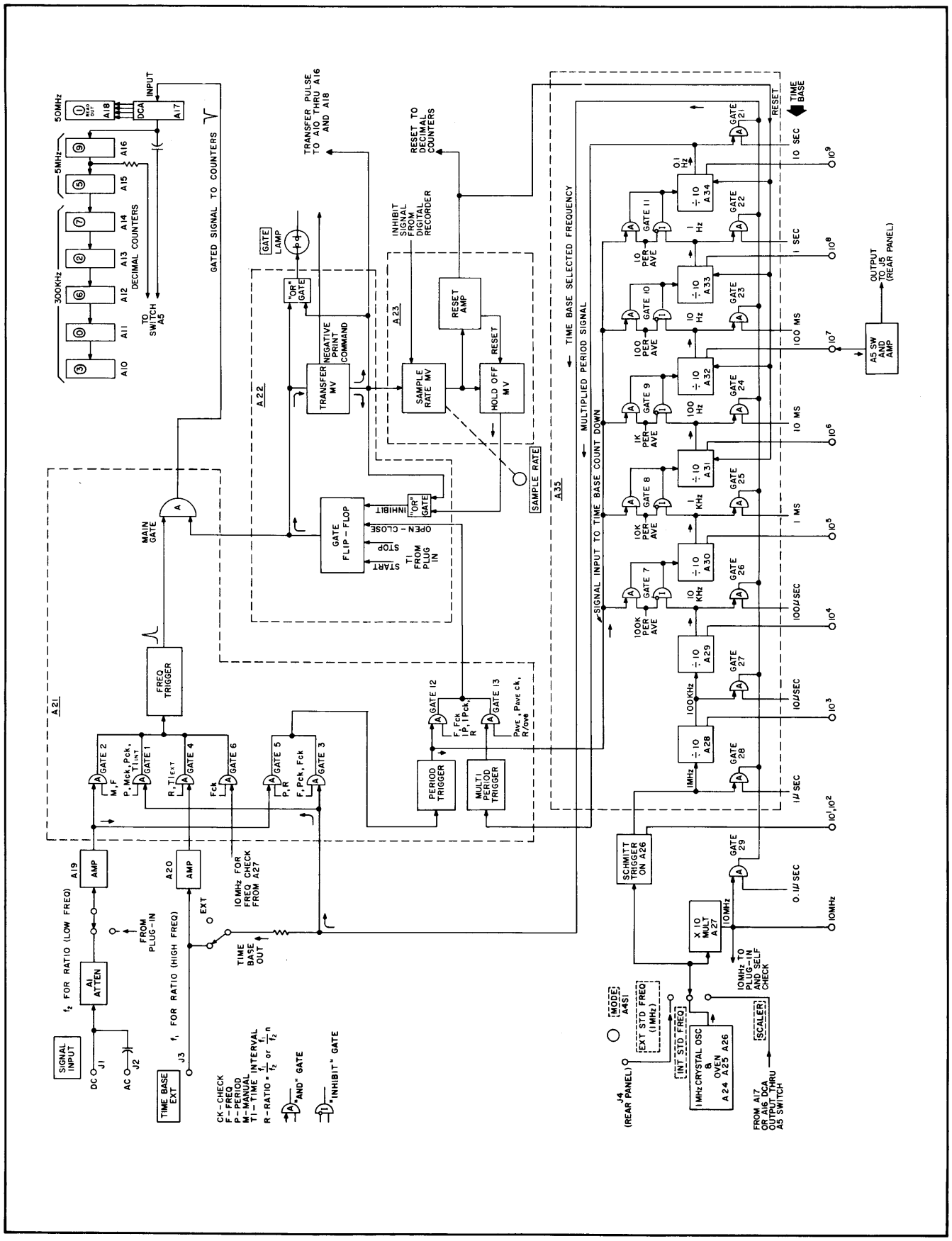

Figure 2-13. Model 5245L Logic Block Diagram

e. Switches +170 volts as first step in generating lamp control voltages (distinguishes between CHECK and not-CHECK positions). Further switching is done by A3, final switching by A2.

2-53. The level control designated -LEVEL+ on the front panel adjusts the dc input trigger level from -0.3 volts dc to +0.3 volts dc. Refer to schematic diagram Figure 7-3 and 7-4 for circuit details. This control allows the trigger level for input signals to be adjusted above or below ground potential. The level control range is increased to ±3 volts dc when the input sensitivity switch is set at 1 volt rms, and is increased to ±30 volts dc for the 10 volt rms setting. The maximum counterclockwise position (PRESET) closes a switch which automatically sets the trigger level at ground potential for all attenuator positions.

2-54. TIME-BASE SWITCH ASSEMBLY A2.

2-55. The time-base switch assembly (designated TIME-BASE on front panel) is a 10-position switch (EXT, 10s, 1s, .1s, 10ms, 1ms, .1ms, 10μs, 1μs, .1μs). Refer to the schematic diagram, Figure 7-4, for circuit details. Switch functions are listed below.

a. Produces gate controls 4, 21, 22, 23, 24, 25, 26, 27, 28, and 29 using switched -15 volts from A1 (SENSITIVITY switch).

b. Produces all decimal point control voltages using switched +170 volts from A3 (FUNCTION switch). Decimal point control voltages are connected to appropriate input terminals on decimal point assembly A8.

c. Produces all measurement units control voltages using switched +170 volts from A3. Measurement unit control voltages are connected to appropriate input terminals on measurement units assembly A9.

d. Generates reset pulses by momentarily supplying -15 volts while switch is between detent positions. This resets all counter circuits if time-base selection is changed during a measurement operation. Reset output is connected to manual reset input of sampling control assembly (pin 9 of A23).

e. Connects time-base selected frequency from A21 (function control assembly) to EXT connector on front panel when switch is not in EXT position. Disconnects selected frequency from EXT connector when switch is in EXT position.

2-56. FUNCTION SWITCH ASSEMBLY A3.

2-57. The function switch assembly (designated FUNCTION on the front panel) is a 10-position switch (MANUAL STOP; MANUAL START; FREQUENCY; PERIOD AVERAGE for 1, 10, 100, 1K, 10K, and 100K periods; and REMOTE OR TIME INT). Refer to the schematic diagram, Figure 7-5, for circuit details. Switch functions are listed below.

a. Produces gate controls 7 through 13 by switching -15 volts from power supply.

b. Contributes to generation of gate controls 1 thru 6 and 21 thru 29.

c. Contributes to generation of decimal point and measurement units controls from switched +170 volts from A1 (SENSITIVITY switch).

d. Produces start and stop input voltages (-15 volts) to gate flip-flop in the gate control assembly (pins 13 and 14 of A23) when switched to MANUAL START and MANUAL STOP.

e. Shorts sample-rate trigger pulse to ground at pin 4 of A23 when switched to either MANUAL START or MANUAL STOP. This inhibits operation of the sample rate and holdoff multivibrators, thereby preventing the reset amplifier from operating in MANUAL functions. This arrangement allows the accumulation of counts in the DCA's over several gate openings during MANUAL operation. Reset is still possible in the MANUAL function by use of the RESET push button on the front panel.

f. Opens the transfer-pulse line between the STORAGE switch on the rear panel and the decimal counters when switched to either MANUAL START or MANUAL STOP. This prevents display storage operation.

g. Opens inhibit-signal line between the DIGITAL RECORDER connector on the rear panel and pin 12 of A23 when switched to either MANUAL START or MANUAL STOP. This prevents undesired triggering of the holdoff multivibrator which could inhibit the gate flip-flop.

h. Generates reset pulses by momentarily supplying -15 volts while switch is between detent positions. This resets all counter circuits if function selection is changed during a measurement operation. Reset output is connected to manual reset input of sampling control assembly (pin 9 of A23).

2-58. MODE SWITCH ASSEMBLY A4.

2-59. The mode switch assembly (designated MODE on rear panel) is a three-position switch (EXT STD FREQ 1 MHz, INT STD FREQ, SCALER). Refer to the schematic diagram, Figure 7-6, for circuit details. Switch functions are listed below:

a. Connects external 1-MHz standard to trigger-circuit of the oscillator assembly (A26) when in EXT STD FREQ 1 MHz position.

b. Connects output of internal oscillator to trigger-circuit of oscillator assembly when in INT STD FREQ position.

c. With A5, connects output of first or second decimal counter (A16 or A17) to trigger-circuit of oscillator assembly when in SCALER position.

d. Provides AC ground through bypass capacitor for signals not selected as input for trigger-circuit of oscillator assembly.

2-60. OUTPUT SWITCH ASSEMBLY A5.

2-61. The output switch assembly (designated OUTPUT on rear panel) includes an amplifier stage and a nine-position switch (.1 Hz thru 10 MHz and 10^9 thru 10 in decade steps). Circuit details are shown in the schematic diagram, Figure 7-6. Switch functions are listed below:

a. Provides standard frequency signals at OUTPUT connector from counter time base if MODE switch is not set to SCALER position. Normally provides all frequencies from .1 Hz to 10 MHz in decade steps but frequencies of 100 Hz and below are interrupted when counter is reset, and availability of frequencies of 1 kHz and below depends on setting of FUNCTION switch.

b. Provides scaling of input signals by factor of 10 to 10^9 (in decade steps) at the OUTPUT connector when MODE switch is set to SCALER and FUNCTION switch is set to MANUAL START.

c. Amplifies selected output for all selections (except standard frequencies of 1 MHz and 10 MHz and scaler ratio of 10 and 100; amplifier is disabled by +13 volt bias supplied when these outputs are selected).

2-62. POWER SUPPLY: RECTIFIER ASSEMBLY A6; REGULATOR ASSEMBLY A7.

2-63. GENERAL. Several supplies are included in the 5245L. Their characteristics are tabulated in Table 2-2.

Note

In the following discussion complete reference designations are used to identify components. This is to prevent confusion between reference designations of power-supply components located on the chassis and components located on the rectifier assembly (A6) and regulator assembly (A7). For example, "R1" would refer to a component located on the chassis, while "A7R1" would refer to a component located on the regulator assembly. Complete designations are used when confusion might exist between chassis components and circuit-board components.

Table 2-2. Power Supplies

Supply	Regulated	Remarks
-15 v	Yes	Series reg
+13 v	Yes	Series reg
+20 v	Yes	Series reg
-130 v	No	-150 v ref to +20 v
+170 v	No	+150 v ref to +20 v

2-64. PRIMARY POWER. As shown in Figure 7-7 either 115- or 230-volt AC power is connected through an LC filter (C5A, C5B, L1, L2), fuse F1 and front-panel power switch S3B (part of SAMPLE RATE control) to the primary of power transformer T1 and T2. Moving slide switch S4 on the rear panel to the left exposes "115" and connects the primaries in parallel for 115-volt operation. Moving the slide switch to the right exposes "230" and connects the primaries in series for 230-volt operation. Transformer T1 supplies power for continuous operation of the crystal-oven-heater control circuits; note that turning off the counter does not turn off the power to the crystal oven. Fan motor B1 is connected across a single primary winding; T2 functions as an autotransformer to supply 115-volts to B1 when the instrument is connected for 230-volt operation.

2-65. MINUS 15-VOLT SUPPLY. The regulated -15 volt supply consists of a full-wave rectifier (A6CR1 through A6CR4) whose output is smoothed by filter L3-C6, regulated by Q2, and further filtered by A7C2. The A7R4, A7R5, A7R6 divider supplies a sample of the regulated output to A7Q2 which amplifies and inverts variations in the sample. The A7Q2 output controls driver A7Q1 which in turn controls regulator Q2. Potentiometer A7R5 permits adjustment of the regulated output voltage by providing a means of adjusting A7Q2 bias.

2-66. REGULATOR OPERATION. Operation may be traced as follows: Suppose the output voltage tends to shift toward -14 volts. This causes the voltage at the A7Q2 base to go in a positive direction resulting in a decrease of conduction and a negative swing in A7Q2 collector voltage; driver A7Q1 increases conduction (A7Q1 emitter and Q2 base voltage go negative); regulator Q2 increases conduction and returns the output voltage to -15 volts.

2-67. OTHER REGULATOR COMPONENTS. Breakdown diode A7CR1 provides a 6.8-volt reference to the emitter of A7Q2. The A7R1-A7C1 network provides phase correction for stability during transients.

2-68. -130 VOLT AND +170 VOLT SUPPLIES. Two conventional full-wave rectifiers supply unregulated +170 volts and -130 volts. Each rectifier circuit provides a 150-volt output (filtered by C7 and C8), but the circuits are referenced to +20 volts so the actual output voltages (relative to ground) are +170 volts and

-130 volts. Note that the -130 volt supply is the source for shunt regulator A7CR2 which provides -56 volts to the -15 volt regulator circuit.

2-69. +13-VOLT AND +20-VOLT SUPPLIES. The +13-volt supply (Q3, A7Q3, and A7Q4; see schematic Figure 7-7) is similar to the -15 volt supply described in Paragraph 2-65. The only significant difference is that the negative leg is grounded while the positive leg provides the regulated output. The +20 volt supply is obtained by adding a 7 volt source to the +13 volt supply. The 7 volt regulator consists of Q4 and A7Q5, both acting as emitter followers. A 7 volt zener diode and a bias adjustment circuit provide the reference voltage for this supply.

2-70. DECIMAL POINT ASSEMBLY A8.

2-71. INPUT. The decimal point assembly holds eight neon lamps which are located to the left of each digital display tube on the front panel. Lamps are designated 0 through 7 from right to left as seen looking at the front panel. The decimal point control signal consists of +170 volts applied to the desired lamp input. Control is supplied either from the TIME BASE switch or the lower REMOTE CONTROL connector on the rear panel.

2-72. OUTPUT. A group of OR gates converts the decimal point control signal from decimal form to binary-coded decimal (BCD) form which is supplied to the DIGITAL RECORDER connector on the rear panel. As an example, suppose decimal point 5 is lighted; a positive signal passes the OR gates and limiters to the A, B, and C output lines, thus providing a 0111 (in the order DCBA) output to the DIGITAL RECORDER connector. For circuit details refer to the schematic diagram, Figure 7-8.

2-73. MEASUREMENT UNITS ASSEMBLY A9.

2-74. INPUT. The measurement units assembly holds six neon lamps which are located on the front panel at the right end of the counter display. Lamps are designated MC, KC, SEC, mS, μS, and *(asterisk). As with the decimal point assembly, the measurement units control signal consists of +170 volts applied to the desired lamp input. Control is supplied either from the TIME-BASE switch or the lower REMOTE CONTROL connector on the rear panel.

2-75. OUTPUT. A group of OR gates converts the measurement units control signal from decimal form to BCD form, just as is done in the decimal point assembly. The digit which is printed for each measurement unit is given in a table along with the schematic diagram, Figure 7-8. Print wheels are available for Hewlett-Packard recorders so that the correct measurement units symbol can be printed directly.

2-76. LOW FREQUENCY DECIMAL COUNTER ASSEMBLY A10-A14.

2-77. The low-frequency decimal counter is shown in Figure 2-14A. Note the inclusion of clipper diodes CR9 through CR13 which permit only positive pulses to be delivered to the input base of each transistor. Operation of basic circuits is discussed in the Paragraphs listed in Table 2-3. Circuit details are given in the schematic diagram, Figure 7-9.

Table 2-3. Basic Operation Summary of Four-Binary Counter

Area	Paragraph Reference
Binary circuits and counting logic	2-25 through 2-29
Resetting	2-30
Electrical readout	2-32
Digital display	2-33 through 2-35
Decimal point	2-70
Clipper diodes	2-8

2-78. 5 MHz DECIMAL COUNTER ASSEMBLY A15, A16.

2-79. The 5 MHz decimal counter operates in a manner similar to the low frequency counter described in Paragraph 2-76. The circuits have been modified by the use of: a) high frequency transistors; b) reduced time constants in the interstage coupling network; and c) steering diodes. The input circuit to binary A includes steering diodes CR9, CR10, CR20, and CR21. These diodes gate the input pulse so that it is applied only to the conducting transistor. For example, if the binary is in the "1" state (Q1 cut off, Q2 conducting), CR9 is reversed biased by approximately 30 volts while CR10 is slightly forward biased. The next input pulse is therefore steered to the base of the conducting transistor Q2. (See Figure 7-11.)

2-80. 50 MHz DECIMAL COUNTER ASSEMBLY A17.

2-81. GENERAL. The 50 MHz decimal counter assembly is shown in Figure 2-16. Operation of basic circuits is discussed in the Paragraphs listed in Table 2-3. Circuit details are given in the schematic diagram, Figure 7-13.

2-82. GATED INPUT. Five AND gates route the input signal to the proper transistor base for each count: feedback is not used. Each of these gates is labeled to indicate the results of an input pulse passed by that gate For example, the first input pulse is passed by gate A (diode gate A is forward biased by the negative collector voltage of transistor $\overline{A}$). This negative pulse turns off transistor $\overline{A}$ which turns on transistor A. In the same way gate $\overline{A}$ passes the second pulse turning on transistor $\overline{A}$. On counts 2, 4, 6, 8, and 0 (10) the input pulse passed by gate $\overline{A}$ is amplified and applied to the inputs of gates B, $\overline{B}$, and C. Gate B conducts when both an input pulse is present and transistor B is not conducting (this occurs on counts 2 and 8). Gate $\overline{B}$ conducts when both an input pulse is present and transistors $\overline{B}$ and $\overline{C}$ are both turned off (this

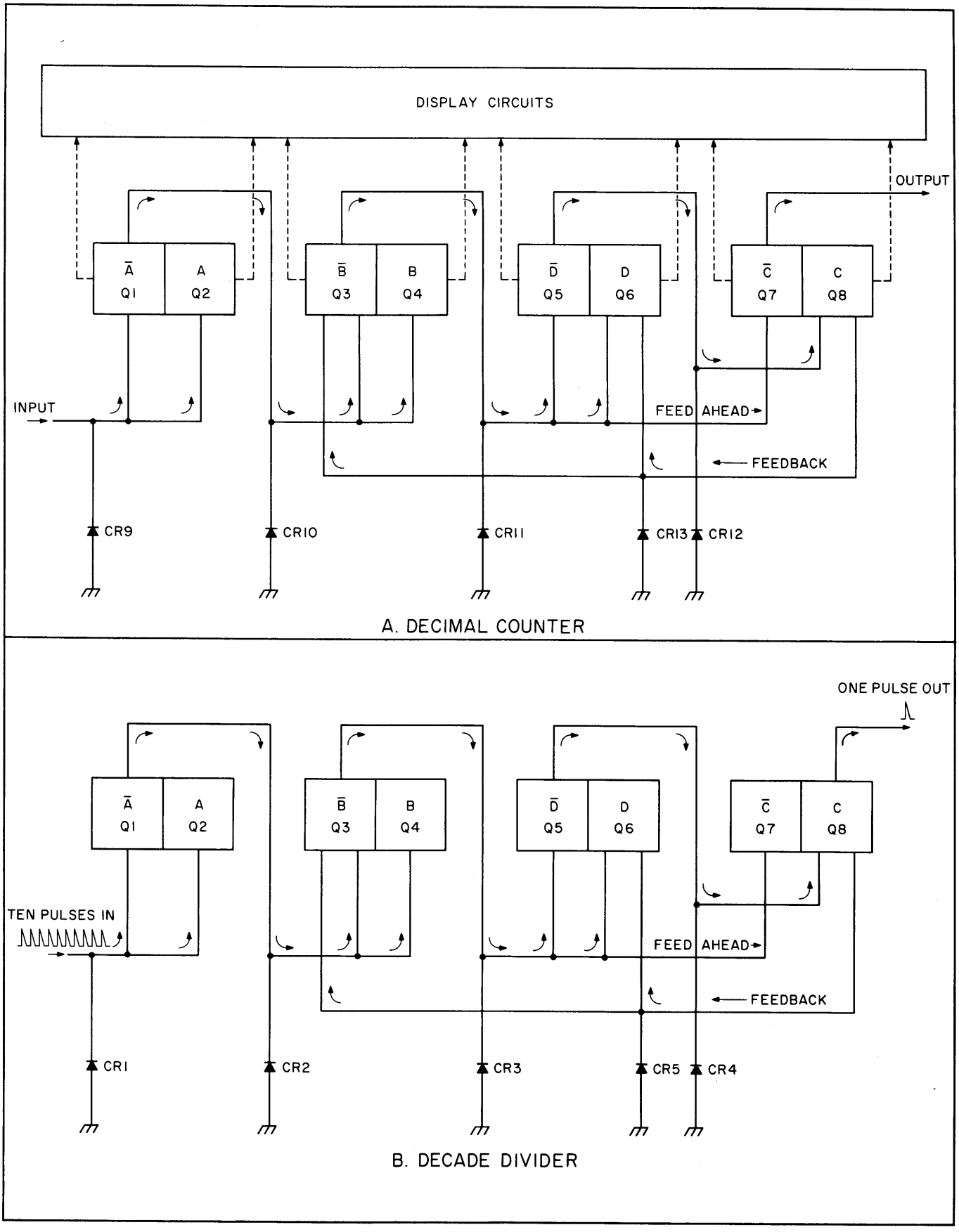

Figure 2-14. Decimal Counter and Decade Divider Block Diagram

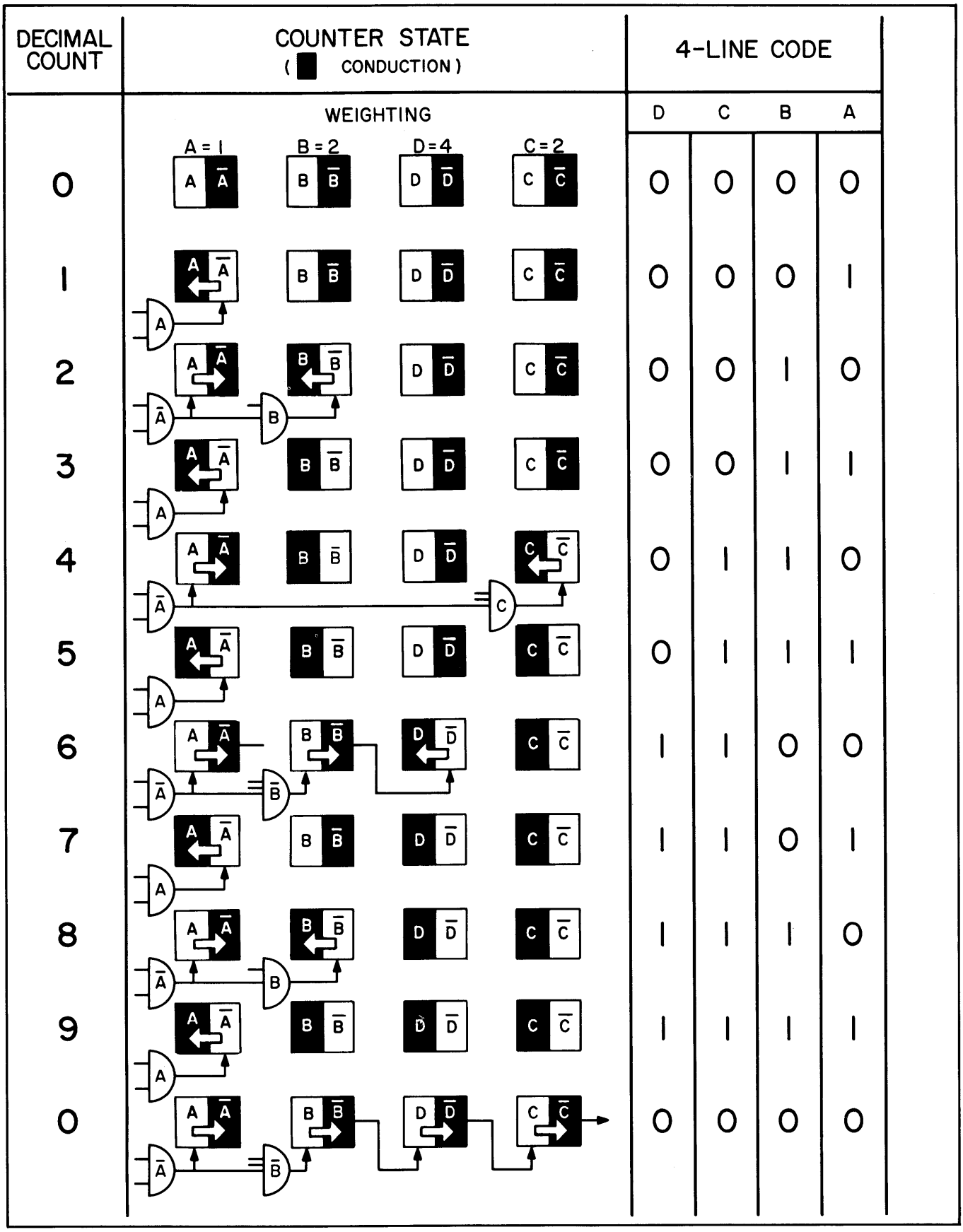

Figure 2-15. 50 MHz Counting Sequence

occurs on counts 6 and 0). Gate C conducts when an input pulse is present and transistors $\bar{B}$ and C are both turned off (count 4).

2-83. OUTPUT. The common emitter amplifier inverts the output and provides the voltage gain necessary to drive the 5 MHz counter assembly.

2-84. 50 MHZ READOUT ASSEMBLY A18.

2-85. GENERAL. The 50 MHz readout assembly (A18) receives the binary-coded decimal output from the 50 MHz decimal counter A17; it provides both front-panel digital display and amplified binary-coded-decimal signals. Circuit details are shown in the schematic diagram, Figure 7-14.

2-86. AMPLIFIERS. Transistors Q1 through Q8 are arranged in four pairs (amplifiers A, B, D, and C). Each amplifier pair controls a pair of neon lamps in the display matrix (for detailed discussion of digital display see Paragraphs 2-33 through 2-35.

2-87. AMPLIFIER OPERATION. As an example of amplifier operation, suppose that the A input became relatively negative, equivalent to binary "0", conduction through Q1 would decrease, resulting in a relatively negative voltage at the Q1 emitter and a relatively positive voltage at the Q1 collector, thus permitting the $\bar{A}$ neon lamp to light; the output of Q1, coupled to Q2 by way of emitter resistor R22 and voltage divider R20-R21, results in conduction of Q2, the Q2 collector voltage therefore becomes relatively negative, representing binary "0", and is supplied as the A output. Operation is reversed upon receipt of a relatively positive input (binary "1") and results in lighting of the A neon lamp and supplying a relatively positive A output, representing binary "1". The B amplifier (Q3-Q4), the D amplifier (Q5-Q6), and the C amplifier (Q7-Q8) operate in a similar manner.

2-88. INPUT AMPLIFIER ASSEMBLY A19-A20.

2-89. Diodes CR2, CR6, CR4, and CR7 together with current source resistors R25 and R26 provides two low voltage sources that function together with limiting diodes CR1 and CR3 to provide protection while maintaining 1 megohm input resistance up to 2.8 volts peak-to-peak (same voltage as the 4 on diodes). Since the input resistance of the limiting diodes in parallel with the temperature matched field effect transistor (FET) pair is much greater than 1 megohm, the input resistance is determined by the resistors in the attenuator A1.

2-90. The LEVEL control supplies a voltage to the second input without a gain change. Transistors Q2A and Q3 are a standard feedback pair used in differential operation with feedback pair Q2B and Q4. The feedback provides small loading on the source followers, wide bandwidth, and stable gain. The second differential pair provides gain with temperature stability and is a current source to drive the twisted pair

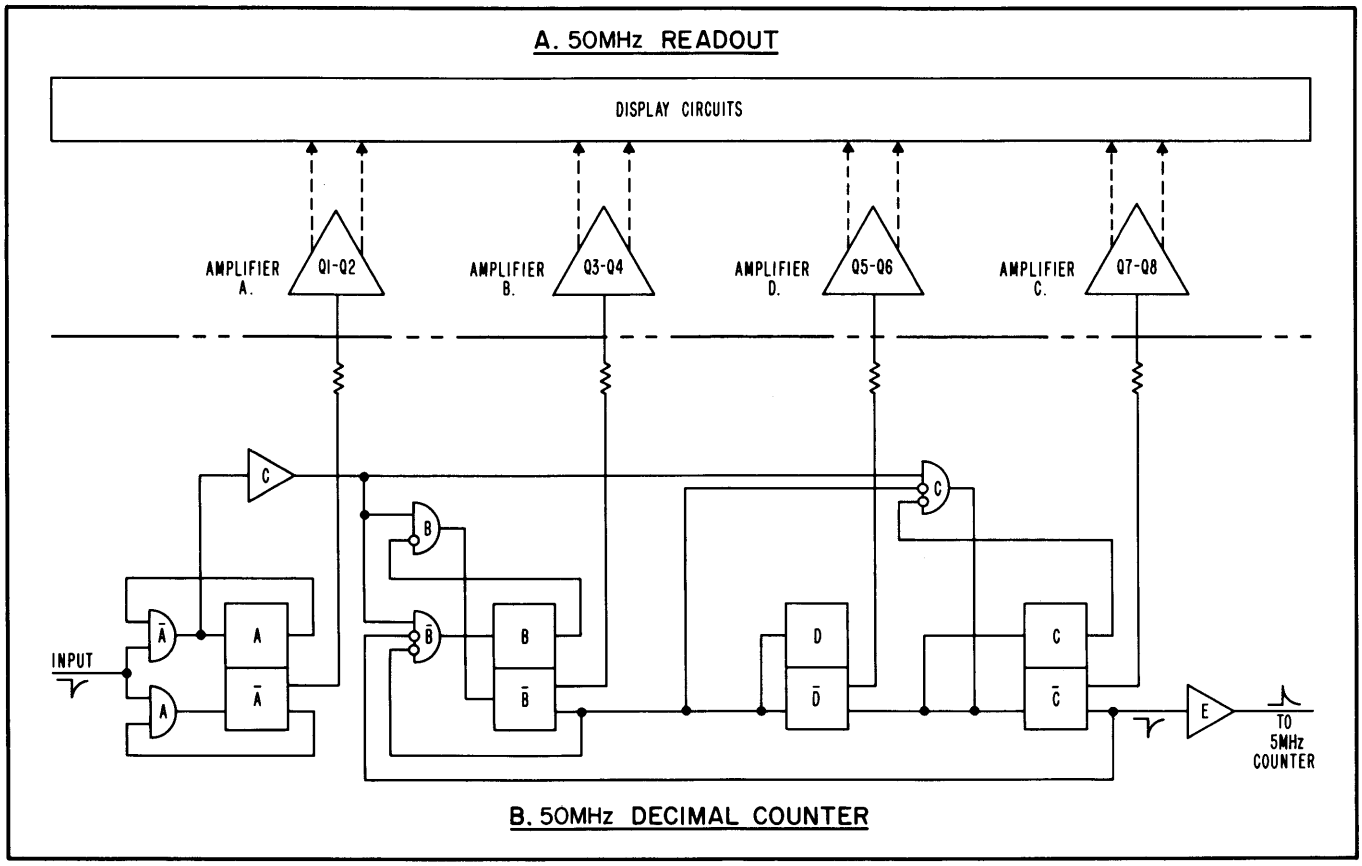

Figure 2-16. 50 MHz Readout and 50 MHz Counter Block Diagram

cable leading to the trigger on the function control assembly A21. The loaded twisted cable optimizes voltage gain, minimizes capacity effects, and isolates signal ground current. See Figure 7-17 for circuit details.

2-91. FUNCTION CONTROL ASSEMBLY A21.

2-92. GENERAL. The function control assembly, Figure 2-17, switches the counter logic circuits to perform the various counting functions. The signal which is counted by the decimal counting assemblies is switched to the high frequency trigger by one of the input gates; 1, 2, 4, or 6. The resulting pulses are gated by the main gate and then drive the 50 MHz DCA, A17. The signal to control the main gate is switched to the period trigger by input gates 3 or 5. The resulting pulses either drive the gate control assembly, A22 directly through gate 12 or are divided by the decade divider assemblies and then drive the gate control through gate 13.

2-93. SIGNAL FLOW. The following outline gives signal flow for each measurement function. In each case the control signal to the main gate is on during counting.

a. MANUAL. The input signal from A19 passes through gate 2, amplifier Q1, high frequency trigger Q3-Q4, pulse amplifier Q9, main gate Q10-Q11, and pulse amplifier Q13 to the gated signal output.

b. MANUAL CHECK. Same as MANUAL except gate 2 is off and gate 1 is on so that the selected frequency from decade dividers passes through to gated signal output.

c. FREQUENCY. Input signal path same as for MANUAL. Selected frequency passes through gate 3, emitter follower Q2, period trigger Q5-Q6, and gate 12 to the gate triggering output.

d. FREQUENCY CHECK. Same as for FREQUENCY except gate 2 is off and gate 6 is on so that a 10 MHz signal passes to gated signal output.

e. PERIOD. Selected frequency from the time base control assembly A35 passes through gate 1, Q1, trigger Q3-Q4, Q9, main gate Q10-Q11, and Q13 to the gated signal output. The input signal from Q19 passes through gate 5, Q9, period trigger Q10-Q11, and gate 12 to the gate triggering outputs.

f. PERIOD CHECK. Same as PERIOD except that gate 5 is off and gate 3 is on so that the selected frequency (always 100 kHz for PERIOD CHECK) from the time base control assembly A35 passes to the gate triggering output.

g. MULTI-PERIOD. Same as PERIOD except that gate 12 is off and gate 13 is on. The output of the period trigger Q5-Q6 is divided by the chain of decade dividers. The output of the proper divider drives the multi-period trigger Q7-Q8, and passes through gate 13 to the gate triggering output.

h. MULTI-PERIOD CHECK. Same as MULTI-PERIOD except that gate 5 is off and gate 3 is on so

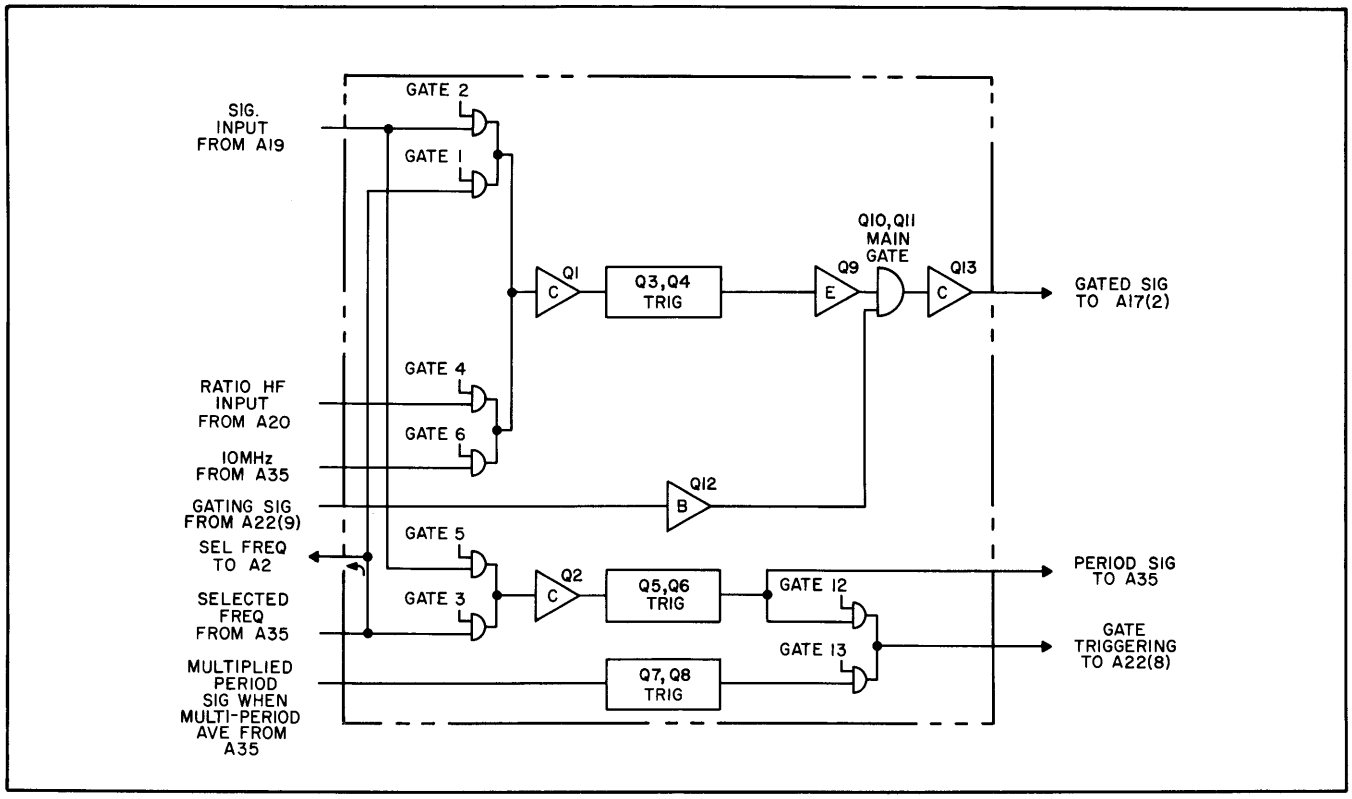

Figure 2-17. Function Control Block Diagram

that the selected frequency (always 100 kHz) from the time base control assembly A35 becomes the driving signal for the second group of decade dividers.

2-94. CIRCUIT DETAILS. Refer to the schematic diagram, Figure 7-18, for circuit details. The basic AND gate description given in Paragraph 2-6 applies to the gate circuits, but note that gates 1 through 6 consist of two diodes. The gates are turned on (signal passes) when -15 volts is applied to the control input to forward-bias the diodes; the gates are turned off (signal blocked) when the -15 volts is removed so that the fixed bias supply (from +13 volts) reverse-biases the diodes. The main gate, Q10-Q11, is open when the gating signal amplifier A12 is off, allowing the pulses from amplifier Q9 to switch the current flowing through Q10 to Q11 and to the output pulse amplifier Q13. The main gate is closed when Q12 is conducting which turns off transistors Q10 and Q11. Thus the pulses from Q9 are not allowed to drive the output pulse amplifier Q13.

2-95. GATE CONTROL ASSEMBLY A22.

2-96. GENERAL. The main function of the gate control assembly is to generate the gating signal (which controls the main gate in A21) and the sampling trigger (which starts the sample-rate multivibrator in A23). Refer to the block diagram, Figure 2-18, during the following discussion.

2-97. SIGNAL FLOW. The gate flip-flop (Q4-Q5) is normally held in its off state (in this state, it holds the main gate closed, preventing counting) by the hold-off signal from A23 which is applied through Q6. The first gate triggering pulse which occurs after the end of the holdoff pulse is amplified by Q1 and steering amplifier Q2 and operates the gate flip-flop to its on state. The next gate triggering pulse turns the gate flip-flop off through Q1 and Q3. (In MANUAL operation -15 volts is applied as a start or stop signal thru CR1 or CR2 to turn the gate flip-flop on or off.) The gate flip-flop output (positive pulse) is amplified without inversion by split-load amplifier Q7 and passed on to A21 as the gating pulse. The trailing edge of the inverted output from Q7 triggers the transfer one-shot multivibrator (Q8-Q9) which produces a 30-millisecond output pulse; the negative pulse output is supplied directly from the multivibrator as the print command pulse (negative transition tells digital recorder to accept BCD information from counter); the positive pulse output from the multivibrator is a) immediately fed back to the gate flip-flop as a hold-off signal thru Q6 to prevent retriggering of the gate flip-flop until the regular holdoff signal from A23 is generated about a microsecond later, b) delivered to A23 for amplification as the transfer pulse, and c) amplified and inverted by Q10. The Q10 output is delivered to A23 as the sampling trigger pulse. (In MANUAL operation the sampling trigger output is shorted to ground by the FUNCTION switch). The negative pulse outputs

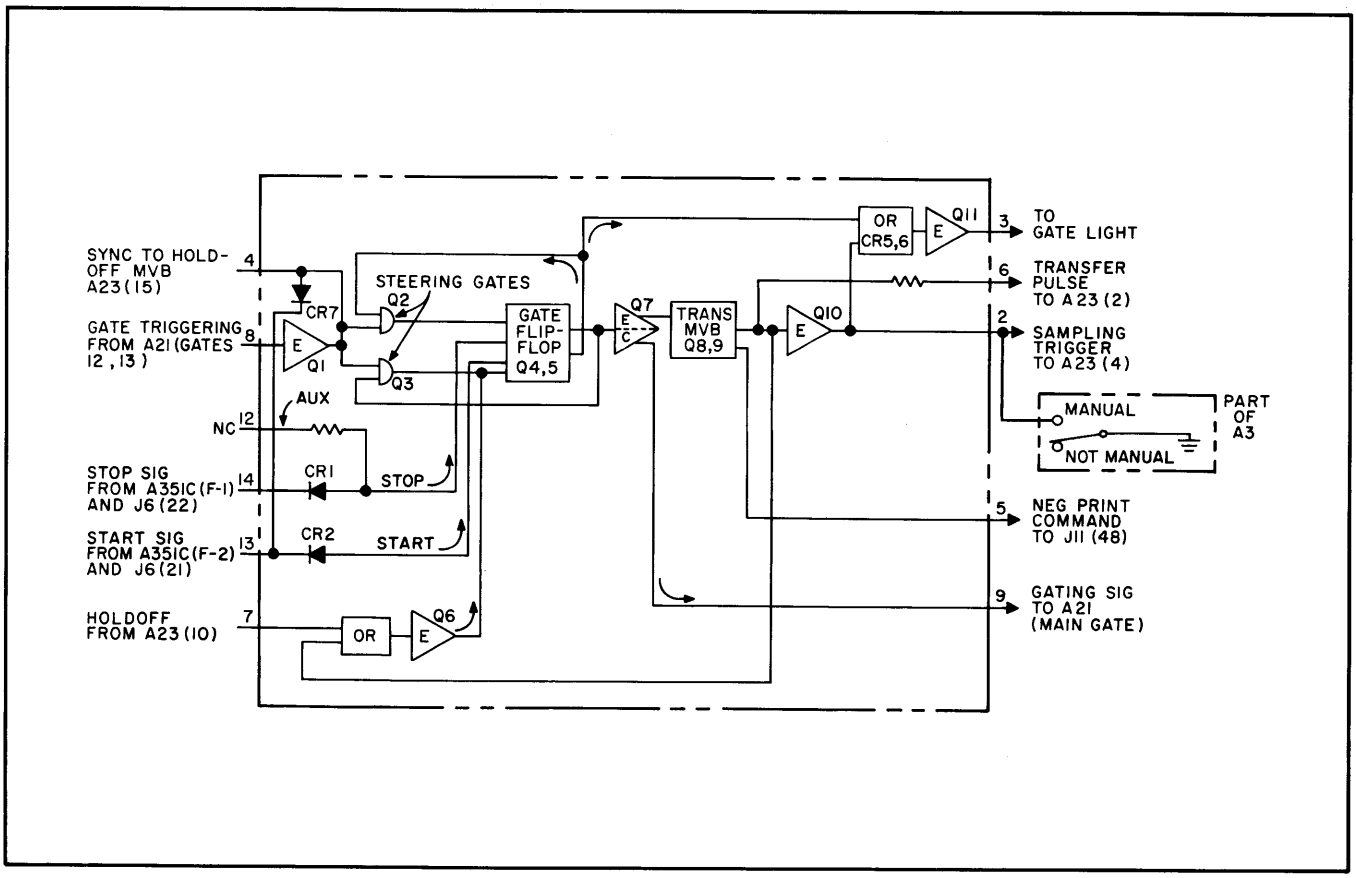

Figure 2-18. Gate Control Block Diagram

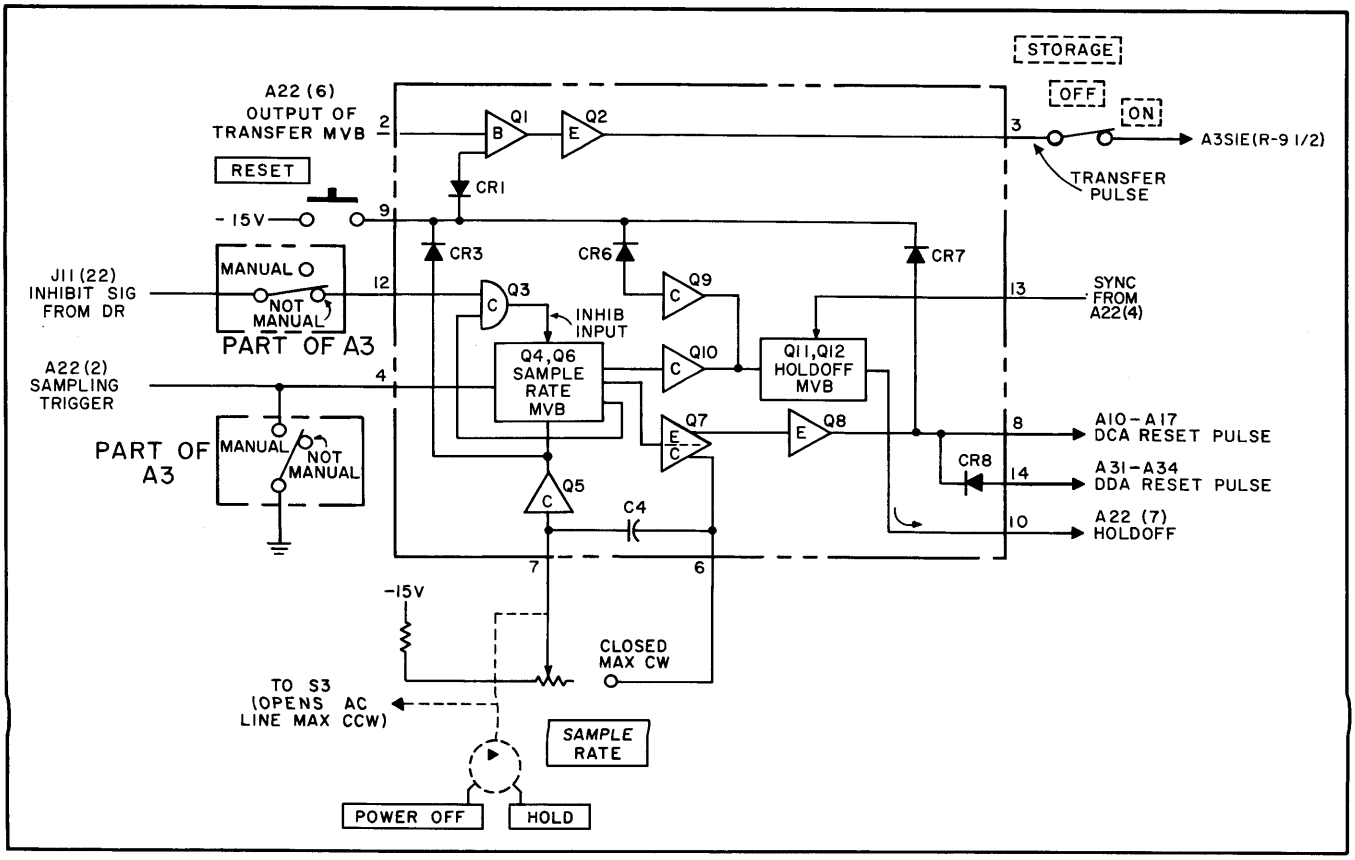

Figure 2-19. Sampling Control Block Diagram

of both the gate flip-flop and amplifier Q10 are combined, then amplified by A11 to drive the front-panel GATE lamp; the GATE lamp is therefore on during the gating signal plus 30 milliseconds; this ensures a visible flash from the lamp even for very short gates.

2-98. CIRCUIT DETAILS. Refer to the schematic diagram, Figure 7-19, for circuit details. All circuits are conventional; flip-flop operation is described in Paragraphs 2-15 and 2-16, and one-shot multivibrator operation is described in Paragraphs 2-19 thru 2-22. The steering amplifiers (Q2 and Q3) are common-base amplifiers; one amplifier (whose collector is connected to the collector of the conducting flip-flop transistor) cannot operate because of low collector voltage; the other amplifier (whose collector is connected to the collector of the cut-off flip-flop transistor) amplifies the gate triggering pulse and supplies it to the receptive flip-flop transistor.

2-99. SAMPLING CONTROL ASSEMBLY A23.

2-100. GENERAL. During normal operation, the sampling control assembly receives the positive transfer pulse and the sampling trigger pulse from A22; its outputs are a) the amplified and inverted transfer pulse, b) reset pulses for the decimal counters and decade dividers, and c) the holdoff signal which prevents retriggering of the gate flip-flop in A22. Refer to the block diagram, Figure 2-19, during the following explanation.

2-101. TRANSFER PULSE. The positive transfer pulse is amplified without inversion by Q1, then amplified and inverted by Q2. During manual reset (RESET pushbutton pressed or FUNCTION or TIME-BASE switches operated) -15 volts is amplified and inverted by Q1, then amplified and inverted by Q2 to produce a manually generated equivalent of the transfer pulse. Action of other circuits resets all decimal counters to zero before the reset contacts open; then the voltage on the transfer pulse line transfers the zero count to the front-panel numerical display.

2-102. RESET. The negative transition of the sampling trigger pulse from A22 normally triggers the sample-rate one-shot multivibrator and starts operation of all sample-rate control circuits. Multivibrator feedback is through quick-recovery amplifier Q7, capacitor C4, and emitter follower Q5. The sample-rate output pulse duration is controlled by the SAMPLE RATE potentiometer and is variable between 55 milliseconds and 5 seconds. When the SAMPLE-RATE control is operated to the HOLD position (completely clockwise), the multivibrator provides a continuous output. An amplified output is taken from Q7, differentiated (leading edge is selected), amplified by Q8, and supplied as the DCA reset pulse and the DDA reset pulse. If manual reset occurs during the sample-rate multivibrator cycle, the multivibrator is quickly returned to its quiescent state as a result of the -15 volt input through CR3.

2-103. HOLDOFF. A second output from the sample-rate multivibrator is amplified by Q10 to drive the holdoff one-shot multivibrator (Q11-Q12). The holdoff multivibrator output consists of a positive pulse which normally begins about 1 microsecond after the end of the gating signal and ends 55 milliseconds after the end of the sample-rate pulse. A holdoff pulse is also generated as a result of manual reset (-15 volts from manual reset line through CR6 and Q9 to Q11-Q12) so that counting cannot start until after reset switching transients have ended.

2-104. CIRCUIT DETAILS. Refer to the schematic diagram, Figure 7-20, for circuit details. Inhibit amplifier Q3 is in series with the Q4 collector; inhibition of the sample-rate multivibrator occurs when Q3 is cut off by a positive inhibit signal (which effectively disconnects the Q4 collector). At the end of the multivibrator cycle, recovery amplifier Q7 conducts heavily to discharge C4 rapidly in preparation for the next cycle. Refer to Paragraphs 2-19 thru 2-22 for a basic one-shot multivibrator discussion.

2-105. OSCILLATOR AND OVEN A24, A25, A26.

2-106. GENERAL. Crystal oven assembly A24, oven control assembly A25, and the first portion of oscillator assembly A26 provide an extremely stable 1 MHz signal. The second portion of A26 amplifies and shapes either the internally generated 1 MHz, an externally supplied 1 MHz, or, for scaler operation, the output of the decimal counter A17 or A16. Refer to the schematic diagram, Figure 7-21, during the following explanation.

2-107. CRYSTAL OVEN ASSEMBLY A24. The crystal oven assembly is a thermally insulated chamber which contains a heating element, a temperature sensing circuit, and a 1 MHz piezo-electric crystal.

2-108. OVEN CONTROL ASSEMBLY A25. The oven control assembly includes oscillator A25Q1 which produces a 3 kHz output whose amplitude is controlled by the temperature-sensing element in the oven. The oscillator output is amplified by A25Q2, detected to produce a DC level whose amplitude is inversely proportional to oven temperature. The DC level is amplified and applied to the heating element in the oven. The oven control assembly contains its own power supply which operates continuously whenever power is connected to the counter.

2-109. OSCILLATOR ASSEMBLY A26. The oscillator assembly includes the Q1 oscillator circuit which is connected to the 1 MHz crystal in A24. The 1 MHz oscillator output is amplified by A26Q2, A26Q3, and A26Q4. A portion of the A26Q4 output is detected and applied to A26Q1 as AGC so that power dissipation in the crystal can be held at a constant low value. Another portion of the A26Q4 output is supplied to the rear panel MODE switch where it usually is switched through to amplifier A26Q5 and trigger A26Q6-A26Q7. Outputs of 1 MHz are taken from both A26Q5 and A26Q6-A26Q7.

2-110. CIRCUIT DETAILS. Refer to the schematic diagram, Figure 7-21, for circuit details. The oscillator A25Q1 is controlled by the Wien bridge in A24. Positive feedback from the A25Q2 emitter through A24R1-A24C6 to the A25Q1 emitter maintains oscillation at the frequency of maximum feedback, which occurs at that frequency for which the A24R1-A24C6 phase shift equals the A24R2-A23C7 phase shift (about 3 kHz). Degenerative feedback is provided from the A25Q2 emitter and the A24RT1-A24R3-A24R4 divider to the A25Q1 base; an increase in oven temperature lowers the resistance of RT1, thus increasing degenerative feedback and lowering oscillator output; likewise, a temperature decrease results in increased degenerative feedback to produce increased oscillator output. The detector is a voltage doubler circuit; A25C2 charges fully through the negative half cycle, and then discharges through A25CR2 in series with the driving source during the positive half cycle. Capacitor A25C4 between the collector and base of A25Q4 dampens sudden DC voltage swings and filters any AC component from the detected signal. The A26Q1 oscillator is a modified Pierce oscillator; its base is maintained at a DC level from the A26R1-A26R2 junction; AGC current is supplied to its emitter from the A26CR1-A26CR2 detector (voltage doubler) which is referenced to the A26R1-A26R2 junction. Limiter A26CR5 holds signal extremities to within about 0.6 volt of ground potential (see Paragraph 2-8). Operation of the trigger circuit (A26Q6-A26Q7) is discussed in detail in Paragraphs 2-18.

2-111. MULTIPLIER ASSEMBLY A27.

2-112. The 1 to 10 MHz multiplier assembly consists of X2 multiplier Q1, X5 multiplier Q2 and amplifier Q3. Circuit details are shown in the schematic diagram, Figure 7-22. Divider R4-R5 and emitter resistor R6 provide optimum DC bias to Q1 for efficient frequency doubling; likewise, divider R8-R9 and emitter resistor R10 provide optimum DC bias to Q2 for efficient fifth-harmonic generation. The interstage coupling transformers (L1-L2, L3-L4, and L5-L6) include capacitive dividers in their secondary circuits (C8-C9, C13-C14, and C19-C20) for interstage impedance matching.

2-113. 5-MHz DECADE DIVIDER ASSEMBLY A28.

2-114. The 5 MHz decade divider assembly reduces the frequency of its input by a factor of ten (normally 1 MHz to 100 kHz). Basic operation is identical to that described for the 5 MHz decimal counter (Paragraphs 2-76 through 2-79), except that there is no displayed count. Refer to the schematic diagram, Figure 7-23, for circuit details.

2-115. LOW-FREQUENCY DECADE DIVIDER ASSEMBLY A29-A34.

2-116. A block diagram of a typical decade divider is shown in Figure 2-14B. A decade divider is an arrangement of four cascaded binaries (flip-flop) so that for every ten input pulses there is one output

pulse. Consequently, when a frequency is applied to the input of the decade divider, the first binary divides it by two (since the first pulse switches the binary to the opposite state and a second pulse is required to return it to its original state) and again by two in the second binary (making a total division by four) and so on, with an expected total division of sixteen at the output of the fourth binary. The desired division by ten is obtained by a feed-ahead pulse to the fourth binary and feedback pulses to the second and third binaries. Therefore, after the eighth input pulse is received the binaries will be in a state as if they had counted fourteen pulses. Then, when the ninth and tenth pulses are received the desired final output pulse is produced. Operation is similar to that described for the decimal counters discussed in Paragraphs 2-76 and 2-77 except that there is no display array connected to the binaries. Note that A31 through A34 are supplied with a reset input so that only a certain number of input pulses to the decade dividers are necessary after reset before an output is produced. Refer to the schematic diagram Figure 7-24, for circuit details.

2-117. TIME-BASE CONTROL ASSEMBLY A35.

2-118. GENERAL. The purpose of the time-base control is to a) lower the output impedance of the 10 MHz signal from multiplier A27; b) select a frequency between 0.1 Hz and 10 MHz as controlled by the TIME BASE switch, and c) provide a multiplied period signal when the FUNCTION switch selection is between 10 and 100K PERIOD AVERAGE. Inhibit gates 7 thru 11 (CR8, CR11, CR14, CR17, and CR20) are normally open; a control voltage to turn one of these gates off is applied only for multiplied period measurement. Multi-period gates 7 thru 11 (CR9, CR12, CR15, CR18, and CR21) are normally closed; one only is opened for multiplied period measurements. Selected frequency gates 21 thru 28 are controlled by the TIME-BASE switch.

2-119. SELECTED FREQUENCY CONTROL. For all operating functions except PERIOD AVERAGE CHECK, gates 21 thru 29 are on for the TIME BASE selections listed in Table 2-4. For example, if the TIME BASE switch is set to 1 ms, the control voltage is applied to gate 25, turning it on and permitting the 1 kHz signal from A30 to be amplified by Q11 and Q12; the amplified 1 kHz is supplied as the selected frequency to A21.

Table 2-4. Normal Time Base Control

Gate Control On	Time Base Switch
21	10 s
22	1 s
23	0.1 s
24	10 ms
25	1 ms
26	0.1 ms
27	10 μs
28	1 μs
29	0.1 μs

(For PERIOD AVERAGE CHECK, gate 27 is on, regardless of TIME BASE selection, and 100 kHz is supplied as the selected frequency.)

2-120. MULTIPLIED PERIOD CONTROL. Control voltages for gates 7 through 11 are supplied only for multiplied period measurements, as listed in Table 2-5. These control voltages select one to give steps of decade division for the period signal supplied by A21. Example 1: The FUNCTION switch is set to 10-PERIOD AVERAGE; gate control 11 is on, turning off inhibit gate 11 (to prevent further division of the signal from A26) and turning on multi-period gate 11; the amplified period signal from Q1 is passed thru CR21, divided by ten in A34, and supplied thru Q10 as the multiplied period signal. Example 2: The FUNCTION switch is set to 1K-PERIOD AVERAGE; gate control 9 is on, turning off inhibit gate 9 and turning on multi-period gate 9; the amplified period signal from Q1 is passed through CR15, divided by ten in A32, passed by CR17, divided in A33, passed by CR20, divided in A34, and supplied through Q10 as the multiplied period signal.

Table 2-5. Multiplied Period Control

Gate Control On	Function Switch
7	100K PERIOD AVE
8	10K PERIOD AVE
9	1K PERIOD AVE
10	100 PERIOD AVE
11	10 PERIOD AVE

2-121. GATING CONFLICT. A few combinations of TIME BASE and FUNCTION switch selections produce overlapping decade-divider requirements. For example, a TIME BASE selection of 0.1s and a FUNCTION selection of 10K-PERIOD AVERAGE turns on gate control 23 and gate control 8; the expected selected frequency of 10 Hz is not supplied through CR16-Q7 since the frequency-dividing chain is blocked at CR11; the counter display is therefore meaningless. An alarm for unallowed switch combinations of this sort is given by the lighting of an asterisk (*) at the right end of the front panel display. The asterisk is also used to indicate two other non-useful control combinations: 1) TIME BASE of 0.1 μs and frequency FUNCTION, and 2) TIME BASE of 10 SEC and PERIOD function. The asterisk lamp (in A9) is controlled by switching contacts on both the TIME BASE and FUNCTION switches.

2-122. CIRCUITS. Refer to the schematic diagram, Figure 7-25, for circuit details. Most of the gates in A35 are of the type described in Paragraph 2-6, but gates 28 and 29 are two-diode AND gates, described in Paragraph 2-94. The inhibit gates (CR8, CR11, CR14, CR17, and CR20) are similar to conventional AND gates except that they are always on (forward-biased diode) in the absence of the control voltage and off (reverse-biased diode) when the control voltage is applied.

SECTION III
PERFORMANCE CHECK

3-1. GENERAL. The In-Cabinet Performance Checks, Table 3-2, and Performance Check Test Card (to be filled out during incoming inspection), pages 3-11a thru 3-11d, verify specifications and provide permanent record of the performance of each instrument. The In-Cabinet Performance Check, Table 3-2, and the Self-Check Procedure, Figure 6-1, verify proper operation of all circuits in the Model 5245L Electronic Counter and may be used:

a. as part of an incoming inspection check of instrument specifications;

b. periodically, for instruments used in systems where maximum reliability is of utmost importance;

c. as part of a troubleshooting procedure to locate malfunctioning circuits, and

d. after any repairs or adjustments, before returning instrument to regular service.

3-2. VARIABLE LINE VOLTAGE. During the Performance Check, Table 3-2, the Model 5245L should be connected to power source through a variable voltage device so that line voltage may be varied ± 10% from nominal (115 or 230 Vac) to assure proper operation of the Counter under various supply conditions.

Table 3-1. Recommended Test Equipment

Instrument Type	Required Characteristics	Use	Instrument Recommended
Oscilloscope	50 MHz bandwidth, dual trace plug-in, ext sync capability.	Observe waveforms during troubleshooting and adjustment. Performance Check.	HP Model 175A Oscilloscope HP Model 1750A Dual Trace Vertical Amplifier HP AC-21C Voltage Divider Probe (two) HP 10003A 10:1 Probe
Test Oscillator	Continuously variable from 10 Hz to 50 MHz, 100 mV output.	Performance Check	HP Model 204B Oscillator HP Model 606A Test Oscillator
Low Frequency Generator	Continuously variable from 2 Hz to 10 Hz, 100 mV output.	Performance Check	HP Model 202A Low Frequency Function Generator
Pulse Generator	1 μsec wide, 1 V negative, 1 kHz repetition rate.	Performance Check	HP Model 212A Pulse Generator
Primary Standard Oscillator	100 kHz or 1 MHz sine wave, accuracy of $< \pm 5 \times 10^{-10}$ per 24 hours.	Check accuracy of Counter time base Performance Check	HP Model 107BR
Variable line voltage source with meter	Variable from 103 to 127 Vac (207 to 253 Vac).	Performance Check	
DC Voltmeter	0V to ± 170V, 10 megohm input impedance, 1% accuracy.	Troubleshooting and adjustments	HP Model 412A
Power Amplifier	DC to 10 MHz, 10 dB gain.	Performance Check	Dymec DY-2460A/ DY-2460A-M2
Power Supply	0V to ± 20V	Performance Check	HP Model 721A

Table 3-1. Recommended Test Equipment (cont'd)

Instrument Type	Required Characteristics	Use	Instrument Recommended
Counter	10 MHz, 100 mV sensitivity, ±1 count ± time base.	Performance Check	HP Model 5245L
Mixer	10 MHz, 50Ω impedance, 40 mW sensitivity max.	Performance Check	HP Model 10514A
Impedance Transformer	1000 ohms to 50 ohms	Performance Check	
Digital to Analog Converter	1-2-2-4 BCD code	Performance Check	HP Model 581A
Strip-Chart Recorder		Performance Check	Moseley 680A
Low-Pass Filter	1 kHz	Performance Check	
Frequency Synthesizer	Precision signal source 0 to 50 MHz	Performance Check	HP Model 5100A/5110A
Coax Attenuator	Variable from 0 to 120 dB in 10 dB steps	Performance Check	HP Model 355D
Coax Attenuator	Variable from 0 to 12 dB in 1 dB steps	Performance Check	HP Model 355C

Note: The Variable Coax Attenuators are used to adjust the output signal level of the Frequency Synthesizer and should be used with the Frequency Synthesizer for all checks.

Table 3-2. In-Cabinet Performance Check

FREQUENCY MEASUREMENTS

1. RANGE: DC coupled: 0 to 50 MHz
AC coupled: 25 Hz to 50 MHz

DC INPUT

a. Set Counter controls as follows:
SENSITIVITY to .1 VOLT
SAMPLE RATE slightly clockwise out of POWER OFF
TIME BASE to .1 s
FUNCTION to FREQUENCY
- LEVEL + to PRESET

b. Connect output of Frequency Synthesizer to Counter DC SIGNAL INPUT and to Oscilloscope input with BNC "T" connector. The oscilloscope is used to monitor the input signal.

c. Vary frequency of Frequency Synthesizer from 0 to 50 MHz at 0.1V rms (0.28 V peak-to-peak).

d. To check for pulse operation, connect Pulse Generator to DC INPUT connector of Counter with normal recommended load. Set Pulse Generator for 1 μsec, 1 volt pulse of the polarity used to adjust the trigger bias with a 500 pps repetition rate. Vary -LEVEL+ control until count is obtained.

Table 3-2. In-Cabinet Performance Check (cont'd)

AC INPUT
Repeat the procedure given for DC INPUT in steps a through e with the input signal connected to the AC Input. Frequency range 50 MHz to: 1) 25 Hz lower range on 0.1 attenuator setting, 2) 5 Hz lower range on 1 attenuator setting, with 1 volt input, and 3) 0.5 Hz lower range on 10 attenuator setting, with 10V input.

2. GATE TIME: selectable from 1 microsecond to 10 seconds.

a. Set Counter controls as follows:
SENSITIVITY to .1 VOLT
SAMPLE RATE slightly clockwise out of POWER OFF
TIME BASE to 1 μs
FUNCTION to FREQUENCY
- LEVEL+ to PRESET

b. Connect Frequency Synthesizer output to Counter DC SIGNAL INPUT.

c. Set Frequency Synthesizer for 10 MHz at 0.1 V rms.

d. Rotate TIME BASE switch counterclockwise through 10s gate position and observe counter reading for each setting. Record results on test card.

3. ACCURACY: ±1 count, ± time base accuracy.

a. Set Counter controls as follows:
SENSITIVITY to .1 VOLT
SAMPLE RATE slightly clockwise out of POWER OFF
TIME BASE to 1 μs
FUNCTION to FREQUENCY
- LEVEL + to PRESET

b. Allow Counter to warm up for 72 hours. Internal crystal should be stabilized.

c. Connect output of Frequency Synthesizer to the Counter DC INPUT.

d. Set Frequency Synthesizer to 50 MHz at 0.1V rms.

e. With TIME BASE switch in the 1 μs position, the Counter should count 50 MHz ± 1 count. Record accuracy on test card.

f. Change the TIME BASE switch to the 10s gate position. The Counter should count 50 MHz ± 12 counts. Record accuracy on test card.

4. OUTPUT DISPLAY: 8 significant figures with decimal point units of measure (kHz or MHz).

SELF-CHECK: counts 10 MHz for the gate time chosen by the TIME BASE switch.

a. Use Self-Check procedure; see Figure 6-1, page 6-4.

b. Record results on test card.

SCALING

1. RANGE: 0 to 50 MHz

a. Set Counter controls as follows:
SENSITIVITY to .1V
SAMPLE RATE slightly clockwise out of POWER OFF
TIME BASE to 10s
FUNCTION to MANUAL START
- LEVEL + to PRESET
MODE (rear panel) to SCALER
OUTPUT (rear panel) to SCALER RATIO 10

Table 3-2. In-Cabinet Performance Check (cont'd)

b. Connect output from rear panel SCALER RATIO OUTPUT jack to Oscilloscope or another 5245L.

c. Connect output of Frequency Synthesizer to Counter DC SIGNAL INPUT.

d. Set Frequency Synthesizer for 50 MHz at 0.1 V rms. The scaled output should be 5 MHz. Record results on test card.

2. FACTOR: by decade selectable from 10 to 10^9.

a. Set Counter controls as follows

SENSITIVITY to .1 VOLT
SAMPLE RATE to slightly clockwise out of POWER OFF.
TIME BASE to 10 sec.
FUNCTION to MAN START.
- LEVEL + to PRESET
MODE (rear panel) to SCALER
OUTPUT (rear panel) to SCALER RATIO 10.

b. Connect rear panel SCALER RATIO OUTPUT to the Oscilloscope or another Counter.

c. Connect the output of the Frequency Synthesizer to the Counter DC SIGNAL INPUT.

d. Set Frequency Synthesizer output for 50 Mhz at 0.1V rms.

e. Rotate rear panel OUTPUT switch through SCALER RATIO positions from 10 through 10^9. The OUTPUT should reduce by a factor of 10 for each setting. Record results on test card.

PERIOD MEASUREMENTS

1. FREQUENCY RANGE SINGLE PERIOD: 0 to 1 MHz

a. Set Counter controls as follows:

SENSITIVITY to .1 VOLT
SAMPLE RATE to slightly clockwise out of POWER OFF
TIME BASE to .1 μsec
FUNCTION to 1 PERIOD AVERAGE
- LEVEL + to PRESET

b. Connect output of Frequency Synthesizer to Counter DC SIGNAL INPUT.

c. Set Synthesizer Frequency for 1 Mhz at 0.1V rms.

d. Counter should display 1 μs, with decimal point correctly positioned and measurement unit displayed. Record results on test card.

2. FREQUENCY RANGE MULTIPLE PERIOD: 0 to 300 kHz.

a. Set Counter controls as follows:

SENSITIVITY to .1 VOLT
SAMPLE RATE to slightly clockwise out of POWER OFF
TIME BASE to 10 sec.
FUNCTION to PERIOD AVERAGE
- LEVEL + to PRESET

b. Connect output of Frequency Synthesizer to Counter DC SIGNAL INPUT.

c. Set Frequency Synthesizer for 300 kHz at 0.1V rms.

d. Rotate TIME BASE switch clockwise to .1 μs observing count. Switch FUNCTION switch to 10 PERIOD AVERAGE and rotate TIME BASE switch counterclockwise through 10 sec observing count at each setting. Repeat rotation of TIME BASE switch at each position of PERIOD AVERAGE switch. Record results on test card.

This check also checks Item 5, OUTPUT DISPLAY.

Table 3-2. In-Cabinet Performance Check (cont'd)

3. PERIOD MEASUREMENT ACCURACY: ±1 count ± time base accuracy ± trigger error where the trigger error is expressed as ±0.3% over 1 period divided by the number of periods averaged for signals with a signal to noise ratio of greater than 40 dB.

a. Set Counter controls as follows:

SENSITIVITY to .1 VOLT
SAMPLE RATE to slightly clockwise out of POWER OFF
TIME BASE to .1 μsec
FUNCTION to 1 PERIOD AVERAGE
- LEVEL + to PRESET

b. Connect output of Frequency Synthesizer to Counter DC SIGNAL INPUT.

c. Set Frequency Synthesizer for 1 MHz at 0.1 V rms.

d. Counter should display 1 μs ± 1 count. Record results on test card.

4. PERIODS AVERAGED: 1 to 10^5 periods in decade steps.

a. Set Counter controls as follows:

SENSITIVITY to .1 VOLT
SAMPLE RATE slightly clockwise out of POWER OFF
TIME BASE to .1 μsec
FUNCTION to 1 PERIOD AVERAGE
- LEVEL + to PRESET

b. Connect output of Frequency Synthesizer Counter DC SIGNAL INPUT.

c. Set Frequency Synthesizer for 1 MHz at 0.1V rms.

d. Rotate FUNCTION switch from 1 PERIOD AVERAGE through 100K (10^5) PERIOD AVERAGE and observe count in each setting. Record results on test card.

5. OUTPUT DISPLAY: 8 significant figures with decimal point and units of measure (sec, ms, or μs).

This is checked by Item 2 , FREQUENCY RANGE MULTIPLE PERIOD. If check is satisfactory, mark test card OK.

6. SELF CHECK: Gate time is 10 μs to 1 sec (periods averaged of 100 kHz); counts 100 kHz from the time base.

Use Self Check Table 6-5, page 6-5. Record results on test card.

FREQUENCY RATIO MEASUREMENTS

1. F1 FREQUENCY RANGE: 0 to 50 MHz

a. Set Counter controls as follows:

SENSITIVITY to .1 VOLT
SAMPLE RATE slightly clockwise out of POWER OFF
TIME BASE to EXT.
FUNCTION to 1 PERIOD AVERAGE
- LEVEL + to PRESET

b. Connect Frequency Synthesizer to Counter TIME BASE EXT connector and set output to 0.1V rms.

Connect HP 5245L 100 Hz OUTPUT STD FREQ to Counter DC SIGNAL INPUT (F2 INPUT).

Observe ratio of F/1 MHz by selecting F1 on Frequency Synthesizer as shown in table on the following page; record readings.

Table 3-2. In-Cabinet Performance Check (cont'd)

F1	F2	Ratio F1/F2
50 MHz	100 Hz	500,000
10 MHz	100 Hz	100,000
1 MHz	100 Hz	10,000
100 kHz	100 Hz	1,000
10 kHz	100 Hz	100
1 kHz	100 Hz	10
500 Hz	100 Hz*	5
100 Hz	100 Hz	1

2. F2 FREQUENCY RANGE: 0 to 300 kHz.

a. Set Counter controls as follows:
SENSITIVITY to . 1 VOLT
SAMPLE RATE to slightly clockwise out of POWER OFF
TIME BASE to EXT.
FUNCTION to 10 PERIOD AVERAGE.
- LEVEL + to PRESET

b. Connect Frequency Synthesizer set for 1 MHz at 0. 1V rms to the Counter TIME BASE EXT connector.

c. Connect Low Frequency Generator to Counter DC SIGNAL INPUT. Vary Low Frequency Generator from 2, 5, and 10 Hz at 0. 1V rms. Observe Counter display for ratio F1/F2. Record results on test card.

d. Replace Low Frequency Generator with Synthesizer and set to frequencies as shown (F2). Use 1 MHz from OUTPUT STD FREQ for F1. Record readings on test card.

F2	Ratio F1/F2
2	500000
5	200000
10	100000
100	10000
1 kc	1000
100 kc	10
300 kc	3. 3

3. MULTIPLE PERIOD: 1 to 10^5 in decade steps.

a. Set Counter controls as follows:
SENSITIVITY to . 1 VOLT
SAMPLE RATE to slightly clockwise out of POWER OFF
TIME BASE to EXT
FUNCTION to 1 PERIOD AVERAGE
- LEVEL + to PRESET

c. Connect Frequency Synthesizer set to 1 MHz at 0. 1V rms to Counter TIME BASE EXT input.
d. Connect Oscillator set to 100 kHz at 0. 1V rms to Counter DC SIGNAL INPUT.
e. Counter should display the ratio of F1/F2 ± 1 count. Record results on test card.

TIME BASE: FREQUENCY (INTERNAL): 1 MHz

1. Stability: Aging Rate: Less than 3 parts in 10^9 per 24 hours.
As a function of line voltage: less than ± 5 parts in 10^{10} for changes of ± 10%.
As a function of ambient temperature: less than ± 2 parts in 10^{10} per °C from -20°C to +55°C.

Table 3-2. In-Cabinet Performance Check (cont'd)

Measure the stability of the time base using the circuit shown below and the following procedure:

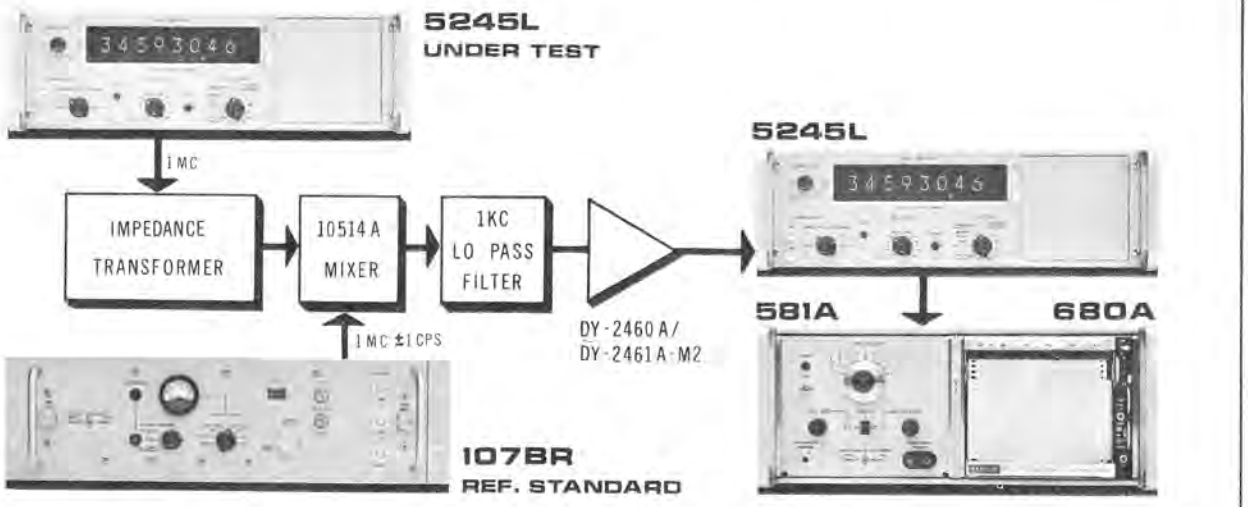

TEMPERATURE:

a. Place the Counter in a temperature-controlled environment. The rest of the circuit should be in a constant temperature environment.

b. Set controls of Counter under test as follows:
SAMPLE RATE slightly clockwise out of POWER OFF
MODE (rear panel) to INT FREQ STD
OUTPUT (rear panel) to 1 MHz 10^2

c. Set digital to analog converter to analog columns 4, 5, and 6. This gives a full scale plot on the strip chart recorder of 10 parts in 10^9.

d. Set the Counter (Table 5-1) to 1. sec TIME BASE and FUNCTION switch to 10 PERIOD AVERAGE.

e. Make a reference plot with Counter at room temperature. Lower the temperature of the Counter under test to -20°C and allow 3 hours for the Counter to reach thermal equilibrium. Make a plot of the output and record any change on the test card. Increase temperature gradually to +55°C and allow 3 hours for thermal equilibrium. Make a plot of the output and record any change on the test card. Note that the change in frequency shall not exceed ± 2 parts in 10^{10} per °C change of ambient temperature. (If necessary set Converter to columns 5, 6, 7 for 10 parts in 10^8 full scale.)

LINE VOLTAGE:

a. Connect the Counter under test to a variable voltage power line source. Using the same system as used for temperature check, make a plot with the line voltage at 115V rms. Lower the line voltage 10% to 103V rms and make a second plot. Set the line voltage to 10% above normal line, 127V rms, and make a third plot. Record any change in frequency on test card. Note that the frequency change is less than ±5 parts in 10^{10} from the first reference plot.

LONG TERM STABILITY:

a. The system should be in a constant temperature environment. Allow 72 hours of continuous operation to stabilize the Counter. Make a reference plot and record the temperature and line voltage on the test card. Repeat the check in 24 hours and record any change in frequency on the test card. Temperature and line voltage must be the same as the first check or compensations for any differences must be made.

Table 3-2. In-Cabinet Performance Check (cont'd)

2. TIME BASE-Output-FRONT PANEL: 0.1 Hz to 1 MHz in decade steps; 1V peak-to-peak. (See specifications Table 1-1.)
a. Set Counter controls as follows: SAMPLE RATE slightly clockwise out of POWER OFF TIME BASE to 1 μs FUNCTION to FREQUENCY b. Connect Oscilloscope to EXT input jack. c. Oscilloscope should display 1 MHz rectangular wave of 1 V peak-to-peak. Record on test card the frequency and amplitude of the TIME BASE output. d. Set the TIME BASE switch to each position, 10 μs through 10s. The displayed frequency should decrease by a factor of 10 for each successive setting of the TIME BASE. The amplitude should be 1V peak-to-peak for all settings. Record on test card frequency and amplitude of TIME BASE output for each successive setting.
3. TIME BASE-Output-REAR PANEL: 0.1 Hz to 10 MHz in decade steps 5V peak-to-peak rectangular wave with 1000-Ω source at 1 MHz and lower; 1V rms sine wave with 1000-Ω source impedance only at 10 MHz. (See specifications Table 1-1.)
a. Set Counter controls as follows: SAMPLE RATE slightly clockwise out of POWER OFF MODE (rear panel) to INT STD FREQ OUTPUT (rear panel) to 10 MHz 10 b. Connect Oscilloscope to the OUTPUT connector (J5) on the rear panel. c. Oscilloscope should display 10 MHz at 1V rms. Record the frequency and amplitude on test card. d. Set the OUTPUT switch to each position, 1 MHz 10^2 through .1 Hz 10^9. The displayed frequency should decrease by a factor of 10 for each successive setting of the OUTPUT switch.
INPUT ATTENUATION
1. Range: Three ranges 0.1, 1.0, and 10 volts.
a. Set Counter controls as follows: SENSITIVITY to .1 VOLT SAMPLE RATE slightly clockwise out of POWER OFF TIME BASE to .1s FUNCTION to FREQUENCY - LEVEL + to PRESET b. Connect Oscillator to Counter DC SIGNAL INPUT. Set Oscillator for 100 kHz at 100 mV (.1V) rms. Counter should count and display 100 kHz. c. Change Counter SENSITIVITY to 1.0 volt. Increase Oscillator output to 100 kHz at 1V rms. The Counter should count and display 100 kHz. Record results on test card. d. Change Counter SENSITIVITY to 10 volts. Increase Oscillator output to 100 kHz at 10V rms. The Counter should count and display 100 kHz. Record results on test card.
DISPLAY STORAGE
a. Set Counter controls as follows: SENSITIVITY to CHECK SAMPLE RATE slightly clockwise out of POWER OFF TIME BASE to .1s FUNCTION to FREQUENCY STORAGE (rear panel) to OFF - LEVEL + to PRESET

Table 3-2. In-Cabinet Performance Check (cont'd)

b. Counter should count 10,000.000 kHz. The change in count should be visible on each digital display tube.

c. Set Counter STORAGE switch to the STORAGE position. The Counter should count, display, and hold 10,000,000 kHz count providing a continuous display of the most recent count. Record results on test card.

SAMPLE RATE

1. Sample Rate: Variable from less than .2 sec to greater than 5 seconds.

a. Set Counter controls as follows:
SENSITIVITY to CHECK
SAMPLE RATE to POWER OFF
TIME BASE to 10 ms
FUNCTION to FREQUENCY
- LEVEL + to PRESET

b. Connect Oscilloscope to J11 Pin 48.

c. Turn the Counter SAMPLE RATE control slightly clockwise out of POWER OFF, and note that the Counter turns on.

d. With the SAMPLE RATE control in maximum position (ccw), observe with oscilloscope the negative pulse duration between gate closing and the following gate opening; it should be less than 200 milliseconds (.2 sec).

e. Increase the SAMPLE RATE control clockwise to minimum sample rate. Observe with Oscilloscope the negative pulse duration between gate closing and the following gate opening; it should be more than 5 seconds.

f. Set the SAMPLE RATE control to the Hold position. The last Counter reading should remain displayed indefinitely. Record results on test card.

DIGITAL OUTPUT

1. Output 4 line 1-2-2-4 BCD: Impedance 100K each line
"0" State Level -8V
"1" State Level +18V

a. The impedance is determined by a fixed value 100K resistor, which can be seen in schematic diagrams Figures 7-9, 7-11, and 7-14.

b. Set Counter controls as follows:
SAMPLE RATE slightly clockwise out of POWER OFF
SENSITIVITY to .1s
TIME BASE to 1 μs
FUNCTION to MANUAL START
MODE (rear panel) to INT STD FREQ

c. Connect Oscilloscope to following points to verify "0" state and "1" state levels. Oscilloscope will display the switch from "0" state (-8 volts) to "1" state (+18 volts) as a positive 26 volts step. Check all recorder outputs for "0" state and "1" state and mark the test card ok.

Table 3-2. In-Cabinet Performance Check (cont'd)

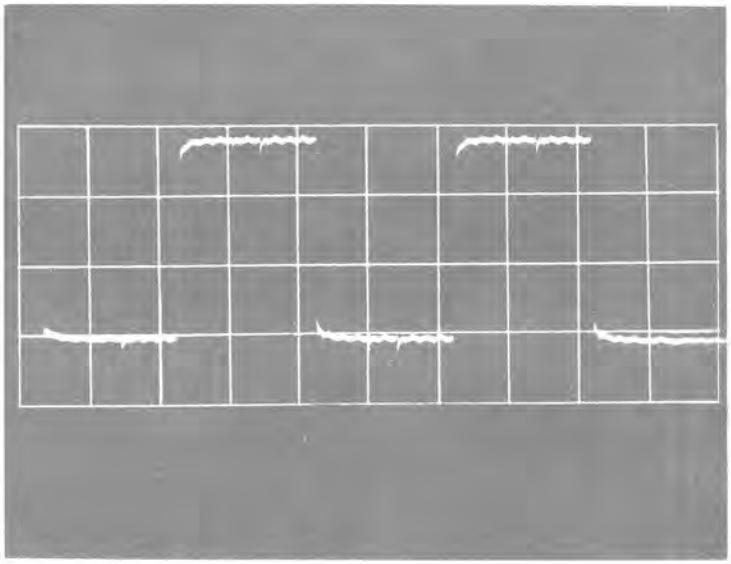

BCD Oscilloscope Display

Oscilloscope Sensitivity 10V/cm
Oscilloscope Sweep Speed .5 ms/cm

DIGITAL RECORDER

J11 Pins		J11	
1	First DCA A18	9	Fifth DCA A13
2	Set	10	Set
26	Frequency Synthesizer to 10 Hz	34	Frequency Synthesizer to 100 kHz
27	(@ 1 V rms)	35	(@ 1 V rms)
3	Second DCA A16	11	Sixth DCA A12
4	Set	12	Set
28	Frequency Synthesizer to 100 Hz	36	Frequency Synthesizer to 1 MHz
29	(@ 1 V rms)	27	(@ 1 V rms)
5	Third DCA A15	13	Seventh DCA A11
6	Set	14	Set
30	Frequency Synthesizer to 1 KHz	38	Frequency Synthesizer to 10 MHz
31	(@ 1 V rms)	39	(@ 1 V rms)
7	Fourth DCA A14	15	Eighth DCA A10
8	Set	16	Set
32	Frequency Synthesizer to 10 kHz	40	Frequency Synthesizer to 10 MHz
33	(@ 1 V rms)	41	(@ 1 V rms)

2. Reference Levels: approx. +17 volts, 350-ohm source impedance; approx. -6.5V, 1000-ohm source.

a. Set Counter SAMPLE RATE control slightly clockwise out of POWER OFF.

b. Connect DC Voltmeter to DIGITAL RECORDER jack (J11) pin 25 to check pos reference (+17 V) and pin 24 to check neg reference (-6V). Record the amplitude of both reference voltages on test card.

Table 3-2. In-Cabinet Performance Check (cont'd)

3. Print Command: Negative step from +13 volts to 0 volts, DC-coupled.

a. Connect Oscilloscope to DIGITAL RECORDER jack (J11) pin 48.

b. Set Counter controls as follows:
SAMPLE RATE slightly clockwise out of POWER OFF
SENSITIVITY to CHECK
TIME BASE to 10 ms
FUNCTION to FREQUENCY

c. The Oscilloscope should display the print command step (-13 volts for each counting cycle). Record the amplitude of this negative step on test card.

4. Hold-Off Requirements: +15V min., +25V max. from chassis ground (1000-ohm source).

a. Set Counter controls as follows:
SAMPLE RATE slightly clockwise out of POWER OFF
SENSITIVITY to CHECK
TIME BASE to 10 s
STORAGE (on rear panel) to non-storage
FUNCTION to FREQUENCY

b. With DC Power Supply, apply hold-off voltage, +25 volts in series with a 1000-ohm resistor to DIGITAL RECORDER jack (J11) Pin 22 on the rear panel. The Counter should stop until the hold-off voltage is removed from J11, pin 22. Record hold-off voltage on test card.

c. Repeat step b, using +15 hold-off voltage. Record hold-off voltage on test card. Note this check can be made using any hold-off voltage from +15 volts to +25 volts.

GATE INDICATOR. Front panel indication of main gate "open" state

a. Set Counter controls as follows:
SENSITIVITY to CHECK
SAMPLE RATE slightly clockwise out of POWER OFF
TIME BASE to 10 s
FUNCTION to MANUAL STOP
- LEVEL + to PRESET

b. Set Counter FUNCTION switch to MANUAL START, the Counter gate lamp should turn on. Record results on test card.

RE-SET CAPABILITY. A momentary control on the front panel that returns both the displayed and internal count to zero.

a. Set Counter controls as follows:
SENSITIVITY to CHECK
SAMPLE RATE slightly clockwise out of POWER OFF
TIME BASE TO 10s
FUNCTION to FREQUENCY
- LEVEL + to PRESET

b. Push front panel RESET pushbutton. Counter should reset and then start a new count. Record result on test card.

PERFORMANCE CHECK TEST CARD

Hewlett-Packard Model 5245L
Electronic Counter

Serial No. ____ - _____

Tests performed by _____
Date _____

Description	Check
A. FREQUENCY MEASUREMENTS.	
1. RANGE: Dc coupled: 0 to 50 MHz Ac coupled: 25 Hz to 50 MHz	☐ 0 Hz to 50 MHz ☐ 25 Hz to 50 MHz
2. GATE TIME: selectable from 1 μs to 10s.	☐ 00000010. ☐ 0010000. 0 ☐ 0000010. 0 ☐ 010000. 00 ☐ 000010. 00 ☐ 10000. 000 ☐ 00010000. ☐ 0000. 0000
3. ACCURACY: ±1 count, ± time base accuracy	☐ 50 MHz ± 1 count ☐ 50 MHz ± 12 counts
4. OUTPUT DISPLAY: 8 significant figures with decimal point and units of measure (kHz or MHz) SELF-CHECK: counts 10 MHz for the gate time chosen by the TIME BASE switch.	☐ 00000010. MHz ☐ 0000010. 0 MHz ☐ 000010. 00 MHz ☐ 00010000. kHz ☐ 0010000. 0 kHz ☐ 010000. 00 kHz ☐ 1000. 0000 kHz ☐ 0000. 0000 kHz
B. SCALING.	TIME BASE OUTPUT JACK (J5)
1. RANGE: 0 to 50 MHz	☐ 5 MHz
2. FACTOR: by decades up to 10^9	☐ 10 MHz in 10 MHz 10 position ☐ 1 MHz in 1 MHz 10^2 position ☐ 100 kHz in 100 kHz 10^3 position ☐ 10 kHz in 10 kHz 10^4 position ☐ 1 kHz in 1 kHz 10^5 position ☐ 100 Hz in 100 Hz 10^6 position ☐ 10 Hz in 10 Hz 10^7 position ☐ 1 Hz in 1 Hz 10^8 position ☐ .1 Hz in .1 Hz 10^9 position
C. PERIOD MEASUREMENTS	SINGLE PERIOD
1. FREQUENCY RANGE SINGLE PERIOD: 0 to 1 MHz.	☐ 0000000. 1 μs
2. FREQUENCY RANGE MULTIPLE PERIOD: 0 to 300 kHz	MULTIPLE PERIOD 1 PERIOD AVERAGE .1 μs ☐ 0000003. 3 μs 1 μs ☐ 00000003. μs 10 μs ☐ 000000. 00 ms .1 ms ☐ 0000000. 0 ms 1 ms ☐ 00000000. ms 10 ms ☐ 000000. 00 sec .1 s ☐ 0000000. 0 sec 1 s ☐ 00000000. sec 10 s ☐ * 10 PERIOD AVERAGE .1 μs ☐ 000003. 33 μs 1 μs ☐ 0000003. 3 μs 10 μs ☐ 00000003. μs .1 ms ☐ 000000. 00 ms 1 ms ☐ 0000000. 0 ms 10 ms ☐ 00000000. ms .1 s ☐ 000000. 00 sec 10 s ☐ *

PERFORMANCE CHECK TEST CARD (Cont'd)

Description	Check
MULTIPLE PERIOD CHECK (cont'd)	100 PERIOD AVERAGE .1 μs ☐ 00003.333 μs 1 μs ☐ 000003.33 μs 10 μs ☐ 0000003.3 μs .1 ms ☐ 00000003. μs 1 ms ☐ 000000.00 ms 10 ms ☐ 0000000.0 ms .1 s ☐ 00000000. ms 1 s ☐ * 10 s ☐ * 1 K PERIOD AVERAGE .1 μs ☐ 0003.3333 μs 1 μs ☐ 00003.333 μs 10 μs ☐ 000003.33 μs .1 ms ☐ 0000003.3 μs 1 ms ☐ 00000003. μs 10 ms ☐ 000000.00 ms .1 s ☐ * 1 s ☐ * 10 s ☐ * 10 K PERIOD AVERAGE .1 μs ☐ 003.33333 μs 1 μs ☐ 0003.3333 μs 10 μs ☐ 00003.333 μs .1 ms ☐ 000003.33 μs 1 ms ☐ 0000003.3 μs 10 ms ☐ * .1 s ☐ * 1 s ☐ * 10 s ☐ * 100 K PERIOD AVERAGE .1 μs ☐ 03.333333 μs 1 μs ☐ 003.33333 μs 10 μs ☐ 0003.3333 μs .1 ms ☐ 00003.333 μs 1 ms ☐ * 10 ms ☐ * .1 s ☐ * 1 s ☐ * 10 s ☐ *
3. PERIOD MEASUREMENT ACCURACY: ± 1 count ± time base accuracy ± trigger error where the trigger error is expressed as ± 0.3% over 1 period, divided by the number of periods averaged for signals with a signal-to-noise ratio of greater than 40 dB.	☐ 0000001.0 μs ± 1 count
4. PERIODS AVERAGED: 1 to 10^5 in decade steps	PERIODS AVERAGED 1 ☐ 0000001.0 μs 10 ☐ 000001.90 μs 100 ☐ 00001.800 μs 1K ☐ 0002.0000 μs 10K ☐ 001.80000 μs 100K ☐ 01.600000 μs
5. OUTPUT DISPLAY: 8 significant figures with decimal point and units of measure (sec, ms, or μs).	OUTPUT DISPLAY ☐ See Item C-2

PERFORMANCE CHECK TEST CARD (Cont'd)

6. SELF CHECK: Gate time is 10 μs to 1 sec (periods averaged of 100 kHz); counts 100 kHz from time base.	PERIOD AVERAGE / DISPLAY 1 ☐ 00000001 10 ☐ 00000010 100 ☐ 00000100 1K ☐ 00001000 10K ☐ 00010000 100K ☐ 00100000
D. FREQUENCY RATIO MEASUREMENTS 1. F1 FREQUENCY RANGE: 0 to 50 MHz	RATIO F1/F2 ☐ 500000 ☐ 100000 ☐ 10000 ☐ 1000 ☐ 100 ☐ 10 ☐ 5 ☐ 1
2. F2 FREQUENCY RANGE: 0 to 300 kHz	☐ 500000 ☐ 200000 ☐ 100000 ☐ 10000 ☐ 1000 ☐ 10 ☐ 3.3
3. MULTIPLE PERIOD: 1 to 10^5 in decade steps	RATIO F1/F2 = 100 kHz/1 MHz PERIOD AVERAGE 1 ☐ 00000010. 10 ☐ 0000010.0 100 ☐ 000010.00 1K ☐ 00010.000 10K ☐ 0010.0000 100K ☐ 010.00000 RATIO F1/F2 = 100 kHz/300 kHz 1 ☐ 00000003. 10 ☐ 0000003.0 100 ☐ 000003.00 1K ☐ 00003.000 10K ☐ 0003.0000 100K ☐ 003.00000
4. INPUT SENSITIVITY: 0.15V rms	☐ 0.15V rms
5. ACCURACY: ±1 count of the larger frequency ± the trigger error	☐ F1/F2 ± 1 count
E. TIME BASE: FREQUENCY (INTERNAL) 1 MHz 1. STABILITY: a. As a function of ambient temperature: less than ±2 parts in 10^{10} per °C from -20°C to +55°C b. As a function of line voltage: less than ±5 parts in 10^{10} for changes of ±10%. c. Stability: aging rate: less than 3 parts in 10^9 per 24 hours	☐ Parts in 10^9 (frequency offset at beginning of test) ☐ Less than ± 2 parts in 10^{10} per °C (stability) ☐ Less than ±5 parts in 10^{10} (stability) ☐ Parts in 10^9 (frequency offset 24 hours later at same temperature and line voltage)

PERFORMANCE CHECK TEST CARD (Cont'd)

2. TIME BASE: Outputs, front panel: 0.1 Hz to 1 MHz in decade steps; 1 V peak-to-peak 3. TIME BASE: Outputs, rear panel: 0.1 Hz to 10 MHz in decade steps, 5 V peak-to-peak rectangular wave with 100-ohm source at 1 MHz and lower; 1V rms sine wave with 1000-ohm source impedance only at 10 MHz.	TIME BASE EXT JACK (J3) ☐ 1 MHz (1 μs) ☐ ☐ 100 kHz (10 μs) ☐ ☐ 10 kHz (.1 ms) ☐ ☐ 1 kHz (1 ms) ☐ 1 V p-p or greater ☐ 1 Hz (10 ms) ☐ ☐ 10 Hz (.1 s) ☐ ☐ 1 Hz (1s) ☐ ☐ .1 Hz (10s) ☐ TIME BASE OUTPUT JACK (J5) ☐ 10 MHz (10) ☐ 1V rms ☐ 1 MHz (10^2) ☐ ☐ 100 kHz (10^3) ☐ ☐ 10 kHz (10^4) ☐ 5V p-p ☐ 1 kHz (10^5) ☐ ☐ 100 Hz (10^6) ☐ ☐ 10 Hz (10^7) ☐ ☐ 1 Hz (10^8) ☐ ☐ .1 Hz (10^9) ☐
F. INPUT ATTENUATION: Three ranges 0.1, 1.0, and 10 volts.	☐ 0.1 volt ☐ 1.0 volt ☐ 10 volts
G. DISPLAY STORAGE: Storage off: count change visible Storage on: count change not visible	☐ Storage off ☐ Storage on
H. SAMPLE RATE: < .2 sec to > 5 seconds	☐ < .2 sec to > 5 seconds
I. BCD CODE: 1. Output 4-line 1-2-2-4 BCD: "0" State Level: approx -8 volts "1" State Level: approx +18 volts 2. Reference Levels: approx +17 volts, 350 ohms source impedance, and approx -6 volts, 1000-ohm source impedance 3. Print Command: negative step from +13 volts to 0 volts, dc coupled 4. Hold-off Requirements: +15 volts min, +25 volts max from chassis ground (1000 ohm source)	☐ "0" state approx -8 volts ☐ "1" state approx +18 volts DIGITAL RECORDER JACK (J11) Pins 25 and 24 ☐ approx +17 volts ☐ approx -6 volts DIGITAL RECORDER JACK (J11) Pin 48 ☐ negative step 13 volts DIGITAL RECORDER JACK (J11) Pin 22 ☐ +15 volts ☐ +25 volts
J. GATE INDICATOR: Front panel indication of main gate "open" state.	☐ Gate light indicates
K. RESET CAPABILITY: Momentary control on the front panel that returns both the displayed and internal count to zero.	☐ Reset switch functions

SECTION IV
REPLACEABLE PARTS

4-1. INTRODUCTION.

4-2. This section contains information for ordering replacement parts. Table 4-1 lists parts in alpha-numerical order of their reference designators and indicates the description and HP stock number of each part, together with any applicable notes. Table 4-2 lists parts in alpha-numerical order of their HP stock number and provides the following information on each part;

a. Description of the part (see list of abbreviations below).

b. Typical manufacturer of the part in a five-digit code; see list of manufacturers in Table 4-3.

c. Manufacturer's part number.

d. Total quantity used in the instrument (TQ column).

4-3. Miscellaneous parts are listed at the end of Table 4-1.

4-4. ORDERING INFORMATION.

4-5. To obtain replacement parts, address order or inquiry to your local Hewlett-Packard Field Office (see lists at rear of this manual for addresses). Identify parts by their Hewlett-Packard stock numbers.

4-6. To obtain a part that is not listed, include:

a. Instrument model number.

b. Instrument serial number.

c. Description of the part.

d. Function and location of the part.

REFERENCE DESIGNATORS

A = assembly	E = misc electronic part	P = plug	V = vacuum, tube, neon bulb, photocell, etc.
B = motor	F = fuse	Q = transistor	
BT = battery	FL = filter	R = resistor	VR = voltage regulator
C = capacitor	J = jack	RT = thermistor	W = cable
CP = coupler	K = relay	S = switch	X = socket
CR = diode	L = inductor	T = transformer	Y = crystal
DL = delay line	M = meter	TB = terminal board	
DS = device signaling (lamp)	MP = mechanical part	TP = test point	

ABBREVIATIONS

A = amperes	H = henries	NPN = negative-positive-negative	RMS = root-mean square
A.F.C. = automatic frequency control	HEX = hexagonal		RWV = reverse working voltage
AMPL = amplifier	HG = mercury	NRFR = not recommended for field replacement	
B.F.O. = beat frequency oscillator	HR = hour(s)	NSR = not separately replaceable	S-B = slow-blow
BE CU = beryllium copper	IF = intermediate freq		SCR = screw
BH = binder head	IMPG = impregnated		SE = selenium
BP = bandpass	INCD = incandescent		SECT = section(s)
BRS = brass	INCL = include(s)	OBD = order by description	SEMICON = semiconductor
BWO = backward wave oscillator	INS = insulation(ed)	OH = oval head	SI = silicon
	INT = internal	OX = oxide	SIL = silver
CCW = counter-clockwise	K = kilo = 1000		SL = slide
CER = ceramic			SPG = spring
CMO = cabinet mount only	LH = left hand	P = peak	SPL = special
COEF = coefficient	LIN = linear taper	PC = printed circuit	SST = stainless steel
COM = common	LK WASH = lock washer	PF = picofarads = 10 farads	SR = split ring
COMP = composition	LOG = logarithmic taper		STL = steel
COMPL = complete	LPF = low pass filter	PH BRZ = phosphor bronze	TA = tantalum
CONN = connector	M = milli = 10^{-3}	PHL = Phillips	TD = time delay
CP = cadmium plate	MEG = meg = 10^{6}	PIV = peak inverse voltage	TGL = toggle
CRT = cathode-ray tube	MET FLM = metal film	PNP = positive-negative-positive	THD = thread
CW = clockwise	MET OX = metallic oxide	P/O = part of	TI = titanium
DEPC = deposited carbon	MFR = manufacturer	POLY = polystyrene	TOL = tolerance
DR = drive	MINAT = miniature	PORC = porcelain	TRIM = trimmer
ELECT = electrolytic	MOM = momentary	POS = position(s)	TWT = traveling wave tube
ENCAP = encapsulated	MTG = mounting	POT = potentiometer	
EXT = external	MY = "mylar"	PP = peak-to-peak	U = micro = 10^{-6}
		PT = point	VAR = variable
F = farads	N = nano (10^{-9})	PWV = peak working voltage	VDCW = dc working volts
FH = flat head	N/C = normally closed		W/ = with
FIL H = fillister head	NE = neon	RECT = rectifier	W = watts
FXD = fixed	NI PL = nickel plate	RF = radio frequency	WIV = working inverse voltage
	N/O = normally open	RH = round head or right hand	
GE = germanium	NPO = negative positive zero (zero temperature coefficient)	RMO = rack mount only	WW = wirewound
GL = glass			W/O = without
GRD = ground(ed)			

Table 4-1. Reference Designation Index

Reference Designation	℗ Stock No.	Description #	Note
A1	05245-6016	SWITCH ASSY:ATTENUATOR	
A1C1	0160-2262	C:FXD CER 16 PF 5% 500VDCW	
A1C2	0160-2260	C:FXD CER 13 PF 5% 500VDCW	
A1C3	0150-0069	C:FXD CER 0.001 UF +100-20% 500VDCW	
A1C4	0160-2550	C:FXD CER 1.0 PF 500VDCW	
A1C5	0160-2248	C:FXD CER 4.3 PF 500VDCW	
A1C6	0140-0169	C:FXD MICA 100 PF 5% 500VDCW	
A1C7	0150-0115	C:FXD CER 27 PF 10% 500VDCW	
A1CR1	1910-0016	SEMICON DEVICE:DIODE GERMANIUM	
A1CR2	1910-0016	DIODE:GERMANIUM 100MA AT 0.85V 60PIV	
A1CR3	1910-0016	SEMICON DEVICE:DIODE GERMANIUM	
A1CR4	1910-0016	SEMICON DEVICE:DIODE GERMANIUM	
A1CR5	1910-0016	SEMICON DEVICE:DIODE GERMANIUM	
A1L1	9100-0346	COIL:FXD 0.5 UH 20%	
A1L2	9100-0346	COIL:FXD 0.5 UH 20%	
A1R1	0683-2245	R:FXD COMP 220K OHM 5% 1/4W	
A1R2	0757-0344	R:FXD MET FLM 1 MEGOHM 1% 1/4W	
A1R3	0757-0368	R:FXD MET FLM 34 OHM 1% 1/8W	
A1R4	0757-0368	R:FXD MET FLM 34 OHM 1% 1/8W	
A1R5	0757-0972	R:FXD MET FLM 100K OHM 2% 1/8W	
A1R6	0686-1055	R:FXD COMP 10 MEGOHM 5% 1/2W	
A1R7	0757-0350	R:FXD MET FLM 909K OHM 1% 1/4W	
A1R8	0757-0972	R:FXD MET FLM 100K OHM 2% 1/8W	
A1R9		NOT ASSIGNED	
A1R10	0757-0948	R:FXD MET FLM 10K OHM 2% 1/8W	
A1R11	2100-1924	R:VAR COMP 5K OHM 20% 1/5W	
A1S1	3100-1860	SWITCH:ROTARY	
A1S2		NSR PART OF R11	
A2		SWITCH ASSY	
A2C1	0150-0122	C:FXD CER 2000PF 20% 500VDCW	
A2R1	0683-1045	R:FXD COMP 100K OHM 5% 1/4W	
A2S1	3100-0319	SWITCH:ROTARY 10 SECT 10 POSITION	
A3		SWITCH ASSY	
A3R1	0683-2025	R:FXD COMP 2000 OHM 5% 1/4W	
A3R2	0683-2025	R:FXD COMP 2000 OHM 5% 1/4W	
A3S1	3100-0315	SWITCH:ROTARY 6 SECT 10 POSITION	
A4	5245L-19B	ASSY:MODE SWITCH	
A4C1	0150-0093	C:FXD CER 0.01UF +80-20 100VDCW	
A4R1	0683-1025	R:FXD,COMP 1000 OHMS 5% 1/4W	
A4S1	3100-0389	SWITCH:ROT 1-SECT 3-POS HP SPEC	

See list of abbreviations in introduction to this section

Table 4-1. Reference Designation Index (Cont'd)

Reference Designation	℗ Stock No.	Description #	Note
A5	5245L-19A	ASSY:OUTPUT SWITCH	
A5C1	0170-0094	C:FXD MY 0.047UF 20% 50VDCW	
A5C2	0170-0094	C:FXD MY 0.047UF 20% 50VDCW	
A5CR1	1910-0016	SEMICON DEVICE:DIODE GERMANIUM	
A5Q1	1850-0062	TRAN$ISTOR:GERMANIUM	
A5R1	0683-3315	R:FXD COMP 330 OHMS 5% 1/4W	
A5R2	0683-4335	R:FXD COMP 43K OHM 5% 1/4W	
A5R3	0683-1025	R:FXD COMP 1000 OHMS 5% 1/4W	
A5R4	0683-1025	R:FXD COMP 1000 OHMS 5% 1/4W	
A5R5	0683-6225	R:FXD COMP 6200 OHMS 5% 1/4W	
A5S1	3100-0390	SWITCH:ROT 2-SECT 9-POS HP SPEC	
A6	5243A-65L	ASSY:RECTIFIER	
	5243A-65L-1	BOARD:BLANK P.C.	
A6C1	0170-0040	C:FXD MY .047 UF 10% 200VDCW	
A6C2	0160-0314	C:FXD MY 0.01 UF 5% 400VDCW	
A6C3	0160-0314	C:FXD MY 0.01 UF 5% 400VDCW	
A6C4	0170-0040	C:FXD MY .047 UF 10% 200VDCW	
A6CR1	1901-0045	SEMICON DEVICE:DIODE SI	
A6CR2	1901-0045	SEMICON DEVICE:DIODE SI	
A6CR3	1901-0045	SEMICON DEVICE:DIODE SI	
A6CR4	1901-0045	SEMICON DEVICE:DIODE SI	
A6CR5	1901-0045	SEMICON DEVICE:DIODE SI	
A6CR6	1901-0045	SEMICON DEVICE:DIODE SI	
A6CR7	1901-0029	SEMICON DEVICE:DIODE SI 600V	
A6CR8	1901-0029	SEMICON DEVICE:DIODE SI 600V	
A6CR9	1901-0045	SEMICON DEVICE:DIODE SI	
A6CR10	1901-0045	SEMICON DEVICE:DIODE SI	
A6CR11	1901-0045	SEMICON DEVICE:DIODE SI	
A6CR12	1901-0045	SEMICON DEVICE:DIODE SI	
A6CR13	1901-0049	SEMICON DEVICE:DIODE SI	
A6CR14	1901-0049	SEMICON DEVICE:DIODE SI	
A6CR15	1901-0049	SEMICON DEVICE:DIODE SI	
A6CR16	1901-0049	SEMICON DEVICE:DIODE SI	
A7	5243A-65H	ASSY:REGULATOR	
	5243A-65H-1	BOARD:BLANK P.C.	
A7C1	0170-0040	C:FXD MY .047 UF 10% 200VDCW	
A7C2	0180-0058	C:FXD ELECT 50UF -10%+100% 25VDCW	
A7C3	0170-0040	C:FXD MY .047 UF 10% 200VDCW	
A7C4	0180-0098	C:FXD ELECT 100UF 20% 20VDCW	
A7C5	0180-0098	C:FXD ELECT 100UF 20% 20VDCW	
A7CR1	1902-0017	SEMICON DEVICE:DIODE SI	
A7CR2	1902-0214	DIODE:SILICON BREAKDOWN 56.2V 10% 1.5W	
A7CR3	1902-0017	SEMICON DEVICE:DIODE SI	
A7CR4	1902-0057	SEMICON DEVICE:DIODE SILICON	
A7Q1	1853-0001	TRAN$ISTOR:PNP SILICON 30V 900MW	

 # See list of abbreviations in introduction to this section

Table 4-1. Reference Designation Index (Cont'd)

Reference Designation	℗ Stock No.	Description #	Note
A7Q2	1850-0062	TRANSISTOR:GERMANIUM	
A7Q3	1853-0001	TRANSISTOR:PNP SILICON 30V 900MW	
A7Q4	1850-0062	TRANSISTOR:GERMANIUM	
A7Q5	1850-0048	TRANSISTOR:GERMANIUM 2N650 PNP	
A7R1	0758-0015	R:FXD MET FLM 220 OHMS 5% 1/2W	
A7R2	0686-1025	R:FXD COMP 1000 OHM 5% 1/2W	
A7R3	0686-2235	R:FXD COMP 22K OHM 5% 1/2W	
A7R4	0758-0015	R:FXD MET FLM 220 OHMS 5% 1/2W	
A7R5	2100-1412	R:VAR COMP 500 OHM 20% LIN 1/4W	
A7R6	0758-0015	R:FXD MET FLM 220 OHMS 5% 1/2W	
A7R7	0689 2035	R:FXD COMP 20K OHM 5% 1W	
A7R8	0758-0015	R:FXD MET FLM 220 OHMS 5% 1/2W	
A7R9	0686-8215	R:FXD COMP 820 OHM 5% 1/2W	
A7R10	0686-7525	R:FXD COMP 7500 OHM 5% 1/2W	
A7R11	0758-0015	R:FXD MET FLM 220 OHMS 5% 1/2W	
A7R12	2100-1412	R:VAR COMP 500 OHM 20% LIN 1/4W	
A7R13	0758-0028	R:FXD MET FLM 270 OHMS 5% 1/2W	
A7R14	0686-8215	R:FXD COMP 820 OHM 5% 1/2W	
A7R15	0686-2735	R:FXD COMP 27K OHM 5% 1/2W	
A7R16	0686-6215	R:FXD COMP 620 OHM 5% 1/2W	
A7R17	2100-1412	R:VAR COMP 500 OHM 20% LIN 1/4W	
A7R18	0686-1225	R:FXD COMP 1200 OHM 5% 1/2W	
A7R19	0686-3625	R:FXD COMP 3600 OHM 5% 1/2W	
A7R20	0683-3615	R:FXD COMP 360 OHM 5% 1/4W	
A8	5243L-65A	ASSY:DECIMAL POINT	
A8CR1	1901-0025	SEMICON DEVICE:DIODE JUNCTION	
A8CR2	1901-0025	SEMICON DEVICE:DIODE JUNCTION	
A8CR3	1901-0025	SEMICON DEVICE:DIODE JUNCTION	
A8CR4		NOT ASSIGNED	
A8CR5	1901-0025	SEMICON DEVICE:DIODE JUNCTION	
A8CR6	1901-0025	SEMICON DEVICE:DIODE JUNCTION	
A8CR7	1901-0025	SEMICON DEVICE:DIODE JUNCTION	
A8CR8	1901-0025	SEMICON DEVICE:DIODE JUNCTION	
A8CR9	1901-0025	SEMICON DEVICE:DIODE JUNCTION	
A8CR10	1901-0025	SEMICON DEVICE:DIODE JUNCTION	
A8CR11	1901-0025	SEMICON DEVICE:DIODE JUNCTION	
A8CR12	1901-0025	SEMICON DEVICE:DIODE JUNCTION	
A8CR13	1901-0025	SEMICON DEVICE:DIODE JUNCTION	
A8CR14		NOT ASSIGNED	
A8CR15	1901-0025	SEMICON DEVICE:DIODE JUNCTION	
A8CR16	1901-0025	SEMICON DEVICE:DIODE JUNCTION	
A8CR17		NOT ASSIGNED	
A8CR18	1901-0025	SEMICON DEVICE:DIODE JUNCTION	
A8DS1 THRU A8DS2		NOT ASSIGNED	
A8DS3	2140-0028	LAMP:GLOW 1/15W	
A8DS4	2140-0028	LAMP:GLOW 1/15W	
A8DS5	2140-0028	LAMP:GLOW 1/15W	
A8DS6	2140-0028	LAMP:GLOW 1/15W	
A8DS7	2140-0028	LAMP:GLOW 1/15W	

See list of abbreviations in introduction to this section

Table 4-1. Reference Designation Index (Cont'd)

Reference Designation	Stock No.	Description #	Note
A8DS8	2140-0028	LAMP:GLOW 1/15W	
A8DS9	2140-0028	LAMP:GLOW 1/15W	
A8R1 THRU A8R2		NOT ASSIGNED	
A8R3	0683-1055	R:FXD COMP 1 MEGOHM 5% 1/4W	
A8R4	0683-6835	R:FXD COMP 68K OHM 5% 1/4W	
A8R5	0683-1055	R:FXD COMP 1 MEGOHM 5% 1/4W	
A8R6	0683-6835	R:FXD COMP 68K OHM 5% 1/4W	
A8R7	0683-1055	R:FXD COMP 1 MEGOHM 5% 1/4W	
A8R8	0683-6835	R:FXD COMP 68K OHM 5% 1/4W	
A8R9	0683-1055	R:FXD COMP 1 MEGOHM 5% 1/4W	
A8R10	0683-6835	R:FXD COMP 68K OHM 5% 1/4W	
A8R11	0683-1055	R:FXD COMP 1 MEGOHM 5% 1/4W	
A8R12	0683-6835	R:FXD COMP 68K OHM 5% 1/4W	
A8R13	0683-1055	R:FXD COMP 1 MEGOHM 5% 1/4W	
A8R14	0683-6835	R:FXD COMP 68K OHM 5% 1/4W	
A8R15	0683-1055	R:FXD COMP 1 MEGOHM 5% 1/4W	
A8R16	0683-6835	R:FXD COMP 68K OHM 5% 1/4W	
A8R17	0683-1245	R:FXD COMP 120K OHM 5% 1/4W	
A8R18	0683-1245	R:FXD COMP 120K OHM 5% 1/4W	
A8R19	0683-1245	R:FXD COMP 120K OHM 5% 1/4W	
A8R20	0683-1245	R:FXD COMP 120K OHM 5% 1/4W	
A9	5243L-65B	ASSY:MEASUREMENT UNITS	
	5243L-65B-1	BOARD:BLANK P.C.	
A9C1	0150-0012	C:FXD CER 0.01UF 20% 1000VDCW	
A9CR1	1901-0025	SEMICON DEVICE:DIODE JUNCTION	
A9CR2	1901-0025	SEMICON DEVICE:DIODE JUNCTION	
A9CR3	1901-0025	SEMICON DEVICE:DIODE JUNCTION	
A9CR4	1901-0025	SEMICON DEVICE:DIODE JUNCTION	
A9CR5	1901-0025	SEMICON DEVICE:DIODE JUNCTION	
A9CR6	1901-0025	SEMICON DEVICE:DIODE JUNCTION	
A9CR7	1901-0025	SEMICON DEVICE:DIODE JUNCTION	
A9CR8	1901-0025	SEMICON DEVICE:DIODE JUNCTION	
A9CR9	1901-0025	SEMICON DEVICE:DIODE JUNCTION	
A9CR10	1901-0025	SEMICON DEVICE:DIODE JUNCTION	
A9CR11	1901-0025	SEMICON DEVICE:DIODE JUNCTION	
A9CR12	1901-0025	SEMICON DEVICE:DIODE JUNCTION	
A9DS1 THRU A9DS9		NOT ASSIGNED	
A9DS10	2140-0015	LAMP:GLOW NEON NE-2H	
A9DS11	2140-0015	LAMP:GLOW NEON NE-2H	
A9DS12	2140-0015	LAMP:GLOW NEON NE-2H	
A9DS13	2140-0015	LAMP:GLOW NEON NE-2H	
A9DS14	2140-0015	LAMP:GLOW NEON NE-2H	
A9DS15	2140-0015	LAMP:GLOW NEON NE-2H	
A9R1	0683-5135	R:FXD COMP 51K OHMS 5% 1/4W	
A9R2	0683-1055	R:FXD COMP 1 MEGOHM 5% 1/4W	
A9R3	0683-5135	R:FXD COMP 51K OHMS 5% 1/4W	

See list of abbreviations in introduction to this section

Table 4-1. Reference Designation Index (Cont'd)

Reference Designation	℗ Stock No.	Description #	Note
A9R4	0683-1055	R:FXD COMP 1 MEGOHM 5% 1/4W	
A9R5	0683-5135	R:FXD COMP 51K OHMS 5% 1/4W	
A9R6	0683-1055	R:FXD COMP 1 MEGOHM 5% 1/4W	
A9R7	0683-5135	R:FXD COMP 51K OHMS 5% 1/4W	
A9R8	0683-1055	R:FXD COMP 1 MEGOHM 5% 1/4W	
A9R9	0683-5135	R:FXD COMP 51K OHMS 5% 1/4W	
A9R10	0683-1055	R:FXD COMP 1 MEGOHM 5% 1/4W	
A9R11	0683-5135	R:FXD COMP 51K OHMS 5% 1/4W	
A9R12	0683-1055	R:FXD COMP 1 MEGOHM 5% 1/4W	
A9R13	0683-1245	R:FXD COMP 120K OHM 5% 1/4W	
A9R14	0683-1245	R:FXD COMP 120K OHM 5% 1/4W	
A9R15	0683-1245	R:FXD COMP 120K OHM 5% 1/4W	
A9R16	0683-1245	R:FXD COMP 120K OHM 5% 1/4W	
A10	5212L-4A	ASSY:DECIMAL COUNTER	
	5212L-4A-1	BLANK BOARD:P.C.	
	05212-6011	READOUT BLOCK ASSEMBLY	
A10C1	0140-0194	C:FXD MICA 110 PF 5% 300 VDCW	
A10C2	0140-0217	C:FXD MICA 140 PF 2% 300VDCW	
A10C3	0140-0194	C:FXD MICA 110 PF 5% 300 VDCW	
A10C4	0140-0195	C:FXD MICA 130 PF 5% 300 VDCW	
A10C5	0140-0194	C:FXD MICA 110 PF 5% 300 VDCW	
A10C6	0140-0194	C:FXD MICA 110 PF 5% 300 VDCW	
A10C7	0140-0198	C:FXD MICA 200PF 5% 300VDCW	
A10C8	0140-0194	C:FXD MICA 110 PF 5% 300 VDCW	
A10C9	0140-0194	C:FXD MICA 110 PF 5% 300 VDCW	
A10C10	0140-0195	C:FXD MICA 130 PF 5% 300 VDCW	
A10C11	0140-0198	C:FXD MICA 200PF 5% 300VDCW	
A10C12	0140-0198	C:FXD MICA 200PF 5% 300VDCW	
A10C13	0140-0199	C:FXD MICA 240PF 5% 300VDCW	
A10CR1	1901-0025	SEMICON DEVICE:DIODE JUNCTION	
A10CR2	1901-0025	SEMICON DEVICE:DIODE JUNCTION	
A10CR3	1901-0025	SEMICON DEVICE:DIODE JUNCTION	
A10CR4	1901-0025	SEMICON DEVICE:DIODE JUNCTION	
A10CR5	1901-0025	SEMICON DEVICE:DIODE JUNCTION	
A10CR6	1901-0025	SEMICON DEVICE:DIODE JUNCTION	
A10CR7	1901-0025	SEMICON DEVICE:DIODE JUNCTION	
A10CR8	1901-0025	SEMICON DEVICE:DIODE JUNCTION	
A10DS1		NSR:PART OF READOUT BLOCK ASSY	
A10DS2		NSR:PART OF READOUT BLOCK ASSY	
A10DS3		NSR:PART OF READOUT BLOCK ASSY	
A10DS4		NSR:PART OF READOUT BLOCK ASSY	
A10DS5		NOT ASSIGNED	
A10DS6	1970-0009	ELECTRON TUBE:INDICATOR 10 DIGIT	
A10CR1	1901-0025	DIODE JUNCTION:100 MA AT 1V 100PIV	
A10CR2	1901-0025	DIODE JUNCTION:100 MA AT 1V 100PIV	
A10CR3	1901-0025	DIODE JUNCTION:100 MA AT 1V 100PIV	
A10CR4	1901-0025	DIODE JUNCTION:100 MA AT 1V 100PIV	
A10CR5	1901-0025	DIODE JUNCTION:100 MA AT 1V 100PIV	
A10CR6	1901-0025	DIODE JUNCTION:100 MA AT 1V 100PIV	

See list of abbreviations in introduction to this section

Table 4-1. Reference Designation Index (Cont'd)

Reference Designation	℗ Stock No.	Description #	Note
A10CR7	1901-0025	DIODE JUNCTION:100 MA AT 1V 100PIV	
A10CR8	1901-0025	DIODE JUNCTION:100 MA AT 1V 100PIV	
A10CR9	1910-0016	SEMICON DEVICE:DIODE GERMANIUM	
A10CR10	1910-0016	SEMICON DEVICE:DIODE GERMANIUM	
A10CR11	1910-0016	SEMICON DEVICE:DIODE GERMANIUM	
A10CR12	1910-0016	SEMICON DEVICE:DIODE GERMANIUM	
A10CR13	1910-0016	SEMICON DEVICE:DIODE GERMANIUM	
A10Q1	1850-0062	TRANSISTOR:GERMANIUM	
A10Q2	1850-0062	TRANSISTOR:GERMANIUM	
A10Q3	1850-0062	TRANSISTOR:GERMANIUM	
A10Q4	1850-0062	TRANSISTOR:GERMANIUM	
A10Q5	1850-0062	TRANSISTOR:GERMANIUM	
A10Q6	1850-0062	TRANSISTOR:GERMANIUM	
A10Q7	1850-0062	TRANSISTOR:GERMANIUM	
A10Q8	1850-0062	TRANSISTOR:GERMANIUM	
A10R1	0686-4735	R:FXD COMP 47K OHM 5% 1/2W	
A10R2		NSR:PART OF READOUT BLOCK ASSY	
A10R3 THRU			
A10R5		NOT ASSIGNED	
A10R6	0683-3945	R:FXD COMP 390K OHMS 5% 1/4W	
A10R7	0683-3945	R:FXD COMP 390K OHMS 5% 1/4W	
A10R8	0683-3945	R:FXD COMP 390K OHMS 5% 1/4W	
A10R9	0683-3945	R:FXD COMP 390K OHMS 5% 1/4W	
A10R10	0683-5635	R:FXD COMP 56K OHMS 5% 1/4W	
A10R11	0683-5635	R:FXD COMP 56K OHMS 5% 1/4W	
A10R12	0683-5635	R:FXD COMP 56K OHMS 5% 1/4W	
A10R13	0683-5635	R:FXD COMP 56K OHMS 5% 1/4W	
A10R14	0683-5635	R:FXD COMP 56K OHMS 5% 1/4W	
A10R15	0683-5635	R:FXD COMP 56K OHMS 5% 1/4W	
A10R16	0683-5635	R:FXD COMP 56K OHMS 5% 1/4W	
A10R17	0683-5635	R:FXD COMP 56K OHMS 5% 1/4W	
A10R18	0686-7525	R:FXD COMP 7500 OHM 5% 1/2W	
A10R19	0683-4335	R:FXD COMP 43K OHM 5% 1/4W	
A10R20	0683-1035	R:FXD COMP 10K OHMS 5% 1/4W	
A10R21	0683-1045	R:FXD COMP 100K OHM 5% 1/4W	
A10R22	0683-4735	R:FXD COMP 47K OHM 5% 1/4W	
A10R23	0683-3925	R:FXD COMP 3900 OHM 5% 1/4W	
A10R24	0683-1815	R:FXD COMP 180 OHM 5% 1/4W	
A10R25	0683-3925	R:FXD COMP 3900 OHMS 5% 1/4W	
A10R26	0686-7525	R:FXD COMP 7500 OHM 5% 1/2W	
A10R27	0683-4335	R:FXD COMP 43K OHM 5% 1/4W	
A10R28	0683-1035	R:FXD COMP 10K OHMS 5% 1/4W	
A10R29	0686-7525	R:FXD COMP 7500 OHM 5% 1/2W	
A10R30	0683-4335	R:FXD COMP 43K OHM 5% 1/4W	
A10R31	0683-8225	R:FXD COMP 8200 OHMS 5% 1/4W	
A10R32	0683-1045	R:FXD COMP 100K OHM 5% 1/4W	
A10R33	0683-4735	R:FXD COMP 47K OHMS 5% 1/4W	
A10R34	0683-3925	R:FXD COMP 3900 OHMS 5% 1/4W	
A10R35	0683-1815	R:FXD COMP 180 OHM 5% 1/4W	
A10R36	0683-3925	R:FXD COMP 3900 OHMS 5% 1/4W	

See list of abbreviations in introduction to this section

Table 4-1. Reference Designation Index (Cont'd)

Reference Designation	℗ Stock No.	Description #	Note
A10R37	0686-7525	R:FXD COMP 7500 OHM 5% 1/2W	
A10R38	0683-4335	R:FXD COMP 43K OHM 5% 1/4W	
A10R39	0683-1035	R:FXD COMP 10K OHMS 5% 1/4W	
A10R40	0686-7525	R:FXD COMP 7500 OHM 5% 1/2W	
A10R41	0683-4335	R:FXD COMP 43K OHM 5% 1/4W	
A10R42	0683-1035	R:FXD COMP 10K OHMS 5% 1/4W	
A10R43	0683-1045	R:FXD COMP 100K OHM 5% 1/4W	
A10R44	0683-4735	R:FXD COMP 47K OHMS 5% 1/4W	
A10R45	0683-3925	R:FXD COMP 3900 OHMS 5% 1/4W	
A10R46	0683-1815	R:FXD COMP 180 OHM 5% 1/4W	
A10R47	0683-3925	R:FXD COMP 3900 OHMS 5% 1/4W	
A10R48	0686-7525	R:FXD COMP 7500 OHM 5% 1/2W	
A10R49	0683-4335	R:FXD COMP 43K OHM 5% 1/4W	
A10R50	0683-8225	R:FXD COMP 8200 OHMS 5% 1/4W	
A10R51	0683-6835	R:FXD COMP 68K OHM 5% 1/4W	
A10R52	0686-7525	R:FXD COMP 7500 OHM 5% 1/2W	
A10R53	0683-4335	R:FXD COMP 43K OHM 5% 1/4W	
A10R54	0683-1035	R:FXD COMP 10K OHMS 5% 1/4W	
A10R55	0683-1045	R:FXD COMP 100K OHM 5% 1/4W	
A10R56	0686 4735	R:FXD COMP 47K OHM 5% 1/2W	
A10R57	0683-3925	R:FXD COMP 3900 OHMS 5% 1/4W	
A10R58	0683-1815	R:FXD COMP 180 OHM 5% 1/4W	
A10R59	0683-3925	R:FXD COMP 3900 OHMS 5% 1/4W	
A10R60	0686-7525	R:FXD COMP 7500 OHM 5% 1/2W	
A10R61	0683-4335	R:FXD COMP 43K OHM 5% 1/4W	
A10R62	0683-1035	R:FXD COMP 10K OHMS 5% 1/4W	
A10V1		NSR:PART OF READOUT BLOCK ASSY	
A11		SAME AS A10, USE PREFIX A11	
A12		SAME AS A10, USE PREFIX A12	
A13		SAME AS A10, USE PREFIX A13	
A14		SAME AS A10, USE PREFIX A14	
A15	05232-6010	DECIMAL COUNTER ASSEMBLY	
	05232-2010	BOARD:BLANK PC	
	05212-6011	READOUT BLOCK ASSEMBLY	
A15C1	0160-0369	C:FXD MICA 17 PF 5%	
A15C2	0160-0369	C:FXD MICA 17 PF 5%	
A15C3	0140-0204	C:FXD MICA 47PF 5% NPO 500VDCW	
A15C4	0140-0204	C:FXD MICA 47PF 5% NPO 500VDCW	
A15C5	0140-0204	C:FXD MICA 47PF 5% NPO 500VDCW	
A15C6	0140-0204	C:FXD MICA 47PF 5% NPO 500VDCW	
A15C7	0140-0194	C:FXD MICA 110 PF 5% 300 VDCW	
A15C8	0140-0204	C:FXD MICA 47PF 5% NPO 500VDCW	
A15C9	0140-0204	C:FXD MICA 47PF 5% NPO 500VDCW	
A15C10	0160-2563	C:FXD CER 2000 PF 20% 500VDCW	
A15C11	0160-2563	C:FXD CER 2000 PF 20% 500VDCW	
A15C12	0140-0191	C:FXD MICA 56 PF 5% 300 VDCW	
A15C13	0160-2306	C:FXD MICA 27 PF 5%	
A15C14	0140-0190	C:FXD MICA 39 PF 5% 300 VDCW	
A15C15	0140-0190	C:FXD MICA 39 PF 5% 300 VDCW	

See list of abbreviations in introduction to this section

Table 4-1. Reference Designation Index (Cont'd)

Reference Designation	Stock No.	Description #	Note
A15C16	0140-0191	C:FXD MICA 56 PF 5% 300 VDCW	
A15C17	0140-0191	C:FXD MICA 56 PF 5% 300 VDCW	
A15CR1	1901-0025	DIODE,JUNCTION:100 MA AT 1V 100PIV	
A15CR2	1901-0025	DIODE,JUNCTION:100 MA AT 1V 100PIV	
A15CR3	1901-0025	DIODE,JUNCTION:100 MA AT 1V 100PIV	
A15CR4	1901-0025	DIODE,JUNCTION:100 MA AT 1V 100PIV	
A15CR5	1901-0025	DIODE,JUNCTION:100 MA AT 1V 100PIV	
A15CR6	1901-0025	DIODE,JUNCTION:100 MA AT 1V 100PIV	
A15CR7	1901-0025	DIODE,JUNCTION:100 MA AT 1V 100PIV	
A15CR8	1901-0025	DIODE,JUNCTION:100 MA AT 1V 100PIV	
A15CR9	1901-0040	DIODE,SILICON:30 MA AT 1V 30 PIV	
A15CR10	1901-0040	DIODE,SILICON:30 MA AT 1V 30 PIV	
A15CR11	1901-0040	DIODE,SILICON:30 MA AT 1V 30 PIV	
A15CR12	1901-0040	DIODE,SILICON:30 MA AT 1V 30 PIV	
A15CR13	1901-0040	DIODE,SILICON:30 MA AT 1V 30 PIV	
A15CR14	1901-0040	DIODE,SILICON:30 MA AT 1V 30 PIV	
A15CR15	1901-0040	DIODE,SILICON:30 MA AT 1V 30 PIV	
A15CR16	1901-0040	DIODE,SILICON:30 MA AT 1V 30 PIV	
A15CR17	1901-0040	DIODE,SILICON:30 MA AT 1V 30 PIV	
A15CR18	1901-0040	DIODE,SILICON:30 MA AT 1V 30 PIV	
A15CR19	1901-0040	DIODE,SILICON:30 MA AT 1V 30 PIV	
A15CR20	1901-0040	DIODE,SILICON:30 MA AT 1V 30 PIV	
A15CR21	1901-0040	SEMICON DEVICE:DIODE SILICON	
A15DS1		NSR PART OF READOUT BLOCK ASSY	
A15DS2		NSR PART OF READOUT BLOCK ASSY	
A15DS3		NSR PART OF READOUT BLOCK ASSY	
A15DS4		NSR PART OF READOUT BLOCK ASSY	
A15DS5		NOT ASSIGNED	
A15DS6	1970-0009	ELECTRON TUBE:INDICATOR 10 DIGIT	
A15Q1	1853-0034	TRANSISTOR:SILICON PNP	
A15Q2	1853-0034	TRANSISTOR:SILICON PNP	
A15Q3	1853-0034	TRANSISTOR:SILICON PNP	
A15Q4	1853-0034	TRANSISTOR:SILICON PNP	
A15Q5	1853-0034	TRANSISTOR:SILICON PNP	
A15Q6	1853-0034	TRANSISTOR:SILICON PNP	
A15Q7	1853-0034	TRANSISTOR:SILICON PNP	
A15Q8	1853-0034	TRANSISTOR:SILICON PNP	
A15R1	0686-4735	R:FXD COMP 47K OHM 5% 1/2W	
A15R2		NSR PART OF READOUT BLOCK ASSY	
A15R3 THRU A15R5		NOT ASSIGNED	
A15R6	0683-3945	R:FXD COMP 390K OHM 5% 1/4W	
A15R7	0683-3945	R:FXD COMP 390K OHM 5% 1/4W	
A15R8	0683-3945	R:FXD COMP 390K OHM 5% 1/4W	
A15R9	0683-3945	R:FXD COMP 390K OHM 5% 1/4W	
A15R10	0683-5635	R:FXD COMP 56K OHM 5% 1/4W	
A15R11	0683-5635	R:FXD COMP 56K OHM 5% 1/4W	
A15R12	0683-5635	R:FXD COMP 56K OHM 5% 1/4W	
A15R13	0683-5635	R:FXD COMP 56K OHM 5% 1/4W	

See list of abbreviations in introduction to this section

Table 4-1. Reference Designation Index (Cont'd)

Reference Designation	℗ Stock No.	Description #	Note
A15R14	0683-5635	R:FXD COMP 56K OHM 5% 1/4W	
A15R15	0683-5635	R:FXD COMP 56K OHM 5% 1/4W	
A15R16	0683-5635	R:FXD COMP 56K OHM 5% 1/4W	
A15R17	0683-5635	R:FXD COMP 56K OHM 5% 1/4W	
A15R18	0761-0010	R:FXD MET OX 1800 OHM 5% 1W	
A15R19	0761-0010	R:FXD MET OX 1800 OHM 5% 1W	
A15R20	0758-0044	R:FXD MET OX 2200 OHM 5% 1/2W	
A15R21	0758-0004	R:FXD MET FLM 2700 OHM 5% 1/2W	
A15R22	0758-0004	R:FXD MET FLM 2700 OHM 5% 1/2W	
A15R23	0758-0004	R:FXD MET FLM 2700 OHM 5% 1/2W	
A15R24	0758-0004	R:FXD MET FLM 2700 OHM 5% 1/2W	
A15R25	0758-0004	R:FXD MET FLM 2700 OHM 5% 1/2W	
A15R26	0683-1635	R:FXD COMP 16K OHM 5% 1/4W	
A15R27	0683-1635	R:FXD COMP 16K OHM 5% 1/4W	
A15R28	0683-1635	R:FXD COMP 16K OHM 5% 1/4W	
A15R29	0683-1635	R:FXD COMP 16K OHM 5% 1/4W	
A15R30	0683-1635	R:FXD COMP 16K OHM 5% 1/4W	
A15R31	0683-1635	R:FXD COMP 16K OHM 5% 1/4W	
A15R32	0683-1635	R:FXD COMP 16K OHM 5% 1/4W	
A15R33	0683-1635	R:FXD COMP 16K OHM 5% 1/4W	
A15R34	0683-1015	R:FXD COMP 100 OHM 5% 1/4W	
A15R35	0683-3925	R:FXD COMP 3900 OHM 5% 1/4W	
A15R36	0683-1835	R:FXD COMP 18K OHM 5% 1/4W	
A15R37	0683-3925	R:FXD COMP 3900 OHM 5% 1/4W	
A15R38	0683-4715	R:FXD 470 OHMS 5% 1/4W	
A15R39	0683-1015	R:FXD COMP 100 OHM 5% 1/4W	
A15R40	0683-3925	R:FXD COMP 3900 OHM 5% 1/4W	
A15R41	0683-1835	R:FXD COMP 18K OHM 5% 1/4W	
A15R42	0683-3925	R:FXD COMP 3900 OHM 5% 1/4W	
A15R43	0683-1115	R:FXD COMP 110 OHM 5% 1/4W	
A15R44	0683-1025	R:FXD COMP 1000 OHM 5% 1/4W	
A15R45	0683-3925	R:FXD COMP 3900 OHM 5% 1/4W	
A15R46	0683-1835	R:FXD COMP 18K OHM 5% 1/4W	
A15R47	0683-3925	R:FXD COMP 3900 OHM 5% 1/4W	
A15R48	0683-1045	R:FXD COMP 100K OHM 5% 1/4W	
A15R49	0683-3925	R:FXD COMP 3900 OHM 5% 1/4W	
A15R50	0683-1835	R:FXD COMP 18K OHM 5% 1/4W	
A15R51	0683-1025	R:FXD COMP 1000 OHM 5% 1/4W	
A15R52	0683-1115	R:FXD COMP 110 OHM 5% 1/4W	
A15R53	0683-3925	R:FXD COMP 3900 OHM 5% 1/4W	
A15R54	0683-1045	R:FXD COMP 100K OHM 5% 1/4W	
A15R55	0683-1025	R:FXD COMP 1000 OHM 5% 1/4W	
A15R56	0683-3625	R:FXD COMP 3600 OHM 5% 1/4W	
A15R57	0683-3625	R:FXD COMP 3600 OHM 5% 1/4W	
A15R58	0683-1025	R:FXD COMP 1000 OHM 5% 1/4W	
A15R59	0683-1045	R:FXD COMP 100K OHM 5% 1/4W	
A15R60	0683-1125	R:FXD COMP 1100 OHM 5% 1/4W	
A15R61	0683-2735	R:FXD COMP 27K OHM 5% 1/4W	
A15R62	0683-1045	R:FXD COMP 100K OHM 5% 1/4W	
A15R63	0683-1235	R:FXD COMP 12K OHM 5% 1/4W	
A15R64	0683-3025	R:FXD COMP 3000 OHM 5% 1/4W	

See list of abbreviations in introduction to this section

Table 4-1. Reference Designation Index (Cont'd)

Reference Designation	Stock No.	Description #	Note
A15R65	0683-3935	R:FXD COMP 39K OHM 5% 1/4W	
A15V1		NSR PART OF READOUT BLOCK ASSY	
A16		SAME AS A15:USE PREFIX A16	
A17	5245A-65C	ASSY:DECIMAL COUNTER	
	5245A-65C-1	BOARD:BLANK P.C.	
A17C1	0150-0093	C:FXD CER 0.01UF +80-20 100VDCW	
A17C2	0150-0050	C:FXD CER 100 PF 600 VDCW	
A17C3	0140-0196	C:FXD MICA 150 PF 5% 300 VDCW	
A17C4	0140-0145	C:FXD MICA 22 PF 5% 500 VDCW	
A17C5	0140-0210	C:FXD MICA 270PF 5% 300VDCW	
A17C6	0140-0145	C:FXD MICA 22 PF 5% 500 VDCW	
A17C7	0140-0196	C:FXD MICA 150 PF 5% 300 VDCW	
A17C8	0140-0202	C:FXD MICA 15 PF 5% 500VDCW	
A17C9	0140-0208	C:FXD MICA 680PF 5% 300VDCW	
A17C10	0140-0202	C:FXD MICA 15 PF 5% 500VDCW	
A17C11	0140-0204	C:FXD MICA 47PF 5% NPO 500VDCW	
A17C12	0140-0145	C:FXD MICA 22 PF 5% 500 VDCW	
A17C13	0140-0214	C:FXD MICA 60PF 5% 300VDCW	
A17C14	0140-0210	C:FXD MICA 270PF 5% 300VDCW	
A17C15	0140-0145	C:FXD MICA 22 PF 5% 500 VDCW	
A17C16	0140-0214	C:FXD MICA 60PF 5% 300VDCW	
A17C17	0140-0203	C:FXD MICA 30PF 5% 500VDCW	
A17C18	0140-0202	C:FXD MICA 15 PF 5% 500VDCW	
A17C19	0140-0210	C:FXD MICA 270PF 5% 300VDCW	
A17C20	0140-0202	C:FXD MICA 15 PF 5% 500VDCW	
A17C21	0140-0193	C:FXD MICA 82PF 5% 300VDCW	
A17C22	0140-0200	C:FXD MICA 390PF 5% 300VDCW	
A17C23	0140-0200	C:FXD MICA 390PF 5% 300VDCW	
A17C24	0140-0200	C:FXD MICA 390PF 5% 300VDCW	
A17C25	0150-0093	C:FXD CER 0.01UF +80-20 100VDCW	
A17C26	0150-0093	C:FXD CER 0.01UF +80-20 100VDCW	
A17C27	0150-0093	C:FXD CER 0.01UF +80-20 100VDCW	
A17C28	0150-0093	C:FXD CER 0.01UF +80-20 100VDCW	
A17C29	0150-0093	C:FXD CER 0.01UF +80-20 100VDCW	
A17CR1	1910-0022	SEMICON DEVICE:DIODE GE 100MA 6PIV 3.5NS	
A17CR2	1910-0022	SEMICON DEVICE:DIODE GE 100MA 6PIV 3.5NS	
A17CR3	1910-0022	SEMICON DEVICE:DIODE GE 100MA 6PIV 3.5NS	
A17CR4	1910-0021	SEMICON DEVICE:DIODE	
A17CR5	1910-0022	SEMICON DEVICE:DIODE GE 100MA 6PIV 3.5NS	
A17CR6	1910-0021	SEMICON DEVICE:DIODE	
A17CR7	1910-0022	SEMICON DEVICE:DIODE GE 100MA 6PIV 3.5NS	
A17CR8	1910-0022	SEMICON DEVICE:DIODE GE 100MA 6PIV 3.5NS	
A17CR9	1910-0021	SEMICON DEVICE:DIODE	
A17CR10	1910-0021	SEMICON DEVICE:DIODE	
A17CR11	1910-0022	SEMICON DEVICE:DIODE GE 100MA 6PIV 3.5NS	
A17CR12	1910-0022	SEMICON DEVICE:DIODE GE 100MA 6PIV 3.5NS	
A17CR13	1910-0022	SEMICON DEVICE:DIODE GE 100MA 6PIV 3.5NS	
A17CR14	1910-0022	SEMICON DEVICE:DIODE GE 100MA 6PIV 3.5NS	
A17CR15	1910-0021	SEMICON DEVICE:DIODE	

See list of abbreviations in introduction to this section

Table 4-1. Reference Designation Index (Cont'd)

Reference Designation	Stock No.	Description #	Note
A17CR16	1910-0022	SEMICON DEVICE:DIODE GE 100MA 6PIV 3.5NS	
A17CR17	1910-0022	SEMICON DEVICE:DIODE GE 100MA 6PIV 3.5NS	
A17CR18	1910-0022	SEMICON DEVICE:DIODE GE 100MA 6PIV 3.5NS	
A17CR19	1910-0022	SEMICON DEVICE:DIODE GE 100MA 6PIV 3.5NS	
A17CR20	1901-0025	SEMICON DEVICE:DIODE JUNCTION	
A17L1	9140-0159	COIL:FXD 0.47UH 20%	
A17L2	9140-0158	COIL:FXD 1.0UH 10%	
A17L3	9140-0159	COIL:FXD 0.47UH 20%	
A17L4	9140-0158	COIL:FXD 1.0UH 10%	
A17L5	9140-0143	COIL:FXD RF 3.3 UH	
A17L6	9140-0159	COIL:FXD 0.47UH 20%	
A17L7	9140-0159	COIL:FXD 0.47UH 20%	
A17L8	9140-0143	COIL:FXD RF 3.3 UH	
A17L9	9140-0143	COIL:FXD RF 3.3 UH	
A17Q1	1854-0009	TRANSISTOR:2N709 NPN SILICON	
A17Q2	1854-0009	TRANSISTOR:2N709 NPN SILICON	
A17Q3	1854-0009	TRANSISTOR:2N709 NPN SILICON	
A17Q4	1854-0009	TRANSISTOR:2N709 NPN SILICON	
A17Q5	1854-0009	TRANSISTOR:2N709 NPN SILICON	
A17Q6	1854-0009	TRANSISTOR:2N709 NPN SILICON	
A17Q7	1854-0009	TRANSISTOR:2N709 NPN SILICON	
A17Q8	1854-0009	TRANSISTOR:2N709 NPN SILICON	
A17Q9	1850-0158	TRANSISTOR:PNP GERMANIUM	
A17Q10	1850-0102	TRANSISTOR:GE2N2455	
A17Q11	1854-0009	TRANSISTOR:2N709 NPN SILICON	
A17Q12	1854-0009	TRANSISTOR:2N709 NPN SILICON	
A17Q13	1854-0009	TRANSISTOR:2N709 NPN SILICON	
A17R1	0683-5115	R:FXD COMP 510 OHMS 5% 1/4W	
A17R2	0683-4725	R:FXD COMP 4700 OHM 5% 1/4W	
A17R3	0683-2015	R:FXD COMP 200 OHMS 5% 1/4W	
A17R4	0683-1225	R:FXD COMP 1200 OHMS 5% 1/4W	
A17R5	0683-3315	R:FXD COMP 330 OHMS 5% 1/4W	
A17R6	0683-2025	R:FXD COMP 2000 OHMS 5% 1/4W	
A17R7	0683-3305	R:FXD COMP 33 OHMS 5% 1/4W	
A17R8	0683-2025	R:FXD COMP 2000 OHMS 5% 1/4W	
A17R9	0683-4725	R:FXD COMP 4700 OHM 5% 1/4W	
A17R10	0683-2015	R:FXD COMP 200 OHMS 5% 1/4W	
A17R11	0683-1225	R:FXD COMP 1200 OHMS 5% 1/4W	
A17R12	0683-3315	R:FXD COMP 330 OHMS 5% 1/4W	
A17R13	0683-2025	R:FXD COMP 2000 OHMS 5% 1/4W	
A17R14	0683-1035	R:FXD COMP 10K OHMS 5% 1/4W	
A17R15	0683-2225	R:FXD COMP 2.2K OHM 5% 1/4W	
A17R16	0683-3315	R:FXD COMP 330 OHMS 5% 1/4W	
A17R17	0683-1825	R:FXD COMP 1800 OHMS 5% 1/4W	
A17R18	0683-2725	R:FXD COMP 2700 OHMS 5% 1/4W	
A17R19	0683-5105	R:FXD COMP 51 OHM 5% 1/4W	
A17R20	0683-2415	R:FXD COMP 240 OHMS 5% 1/4W	
A17R21	0683-1825	R:FXD COMP 1800 OHMS 5% 1/4W	
A17R22	0683-2725	R:FXD COMP 2700 OHMS 5% 1/4W	
A17R23	0683-2225	R:FXD COMP 2.2K OHM 5% 1/4W	

See list of abbreviations in introduction to this section

Table 4-1. Reference Designation Index (Cont'd)

Reference Designation	Stock No.	Description #	Note
A17R24	0683-2025	R:FXD COMP 2000 OHMS 5% 1/4W	
A17R25	0683-1035	R:FXD COMP 10K OHMS 5% 1/4W	
A17R26	0683-2215	R:FXD COMP 220 OHMS 5% 1/4W	
A17R27	0683-1015	R:FXD COMP 100 OHMS 5% 1/4W	
A17R28	0683-4715	R:FXD COMP 470 OHM 5% 1/4W	
A17R29	0683-2415	R:FXD COMP 240 OHMS 5% 1/4W	
A17R30	0683-1025	R:FXD COMP 1000 OHM 5% 1/4W	
A17R31	0683-8215	R:FXD COMP 820 OHMS 5% 1/4W	
A17R32	0683-3025	R:FXD COMP 3000 OHMS 5% 1/4W	
A17R33	0683-5105	R:FXD COMP 51 OHM 5% 1/4W	
A17R34	0683-2415	R:FXD COMP 240 OHMS 5% 1/4W	
A17R35	0683-1025	R:FXD COMP 1000 OHM 5% 1/4W	
A17R36	0683-8215	R:FXD COMP 820 OHMS 5% 1/4W	
A17R37	0683-3025	R:FXD COMP 3000 OHMS 5% 1/4W	
A17R38	0683-2025	R:FXD COMP 2000 OHMS 5% 1/4W	
A17R39	0683-1035	R:FXD COMP 10K OHMS 5% 1/4W	
A17R40	0683-4715	R:FXD COMP 470 OHM 5% 1/4W	
A17R41	0683-3315	R:FXD COMP 330 OHMS 5% 1/4W	
A17R42	0683-1825	R:FXD COMP 1800 OHMS 5% 1/4W	
A17R43	0683-2725	R:FXD COMP 2700 OHMS 5% 1/4W	
A17R44	0683-5105	R:FXD COMP 51 OHM 5% 1/4W	
A17R45	0683-3315	R:FXD COMP 330 OHMS 5% 1/4W	
A17R46	0683-1825	R:FXD COMP 1800 OHMS 5% 1/4W	
A17R47	0683-2725	R:FXD COMP 2700 OHMS 5% 1/4W	
A17R48	0683-4715	R:FXD COMP 470 OHM 5% 1/4W	
A17R49	0683-2025	R:FXD COMP 2000 OHMS 5% 1/4W	
A17R50	0683-1035	R:FXD COMP 10K OHMS 5% 1/4W	
A17R51	0686-4715	R:FXD COMP 470 OHMS 5% 1/2W	
A17R52	0683-5115	R:FXD COMP 510 OHM 5% 1/4W	
A17R53	0683-0475	R:FXD COMP 4.7 OHMS 5% 1/4W	
A17R54	0683-5615	R:FXD COMP 560 OHMS 5% 1/4W	
A17R55	0683-4315	R:FXD COMP 430 OHMS 5% 1/4W	
A17R56	0683-7515	R:FXD COMP 750 OHMS 5% 1/4W	
A17R57	0683-7515	R:FXD COMP 750 OHMS 5% 1/4W	
A17R58	0683-5115	R:FXD COMP 510 OHM 5% 1/4W	
A17R59	0683-7515	R:FXD COMP 750 OHMS 5% 1/4W	
A17R60	0761-0020	R:FXD MET FLM 91 OHM 5% 1W	
A17R61	0683-1015	R:FXD COMP 100 OHMS 5% 1/4W	
A17R62	0683-6805	R:FXD COMP 68 OHMS 5% 1/4W	
A18	5245L-48	ASSY:READOUT	
	5243A-65A-1	BOARD:BLANK P.C.	
	05212-6011	READOUT BLOCK ASSEMBLY	
A18CR1	1901-0025	SEMICON DEVICE:DIODE JUNCTION	
A18CR2	1901-0025	SEMICON DEVICE:DIODE JUNCTION	
A18CR3	1901-0025	SEMICON DEVICE:DIODE JUNCTION	
A18CR4	1901-0025	SEMICON DEVICE:DIODE JUNCTION	
A18CR5	1901-0025	SEMICON DEVICE:DIODE JUNCTION	
A18CR6	1901-0025	SEMICON DEVICE:DIODE JUNCTION	
A18CR7	1901-0025	SEMICON DEVICE:DIODE JUNCTION	
A18CR8	1901-0025	SEMICON DEVICE:DIODE JUNCTION	

See list of abbreviations in introduction to this section

Table 4-1. Reference Designation Index (Cont'd)

Reference Designation	Stock No.	Description #	Note
A18DS1		NSR PART OF READOUT BLOCK ASSY.	
A18DS2		NSR PART OF READOUT BLOCK ASSY.	
A18DS3		NSR PART OF READOUT BLOCK ASSY.	
A18DS4		NSR PART OF READOUT BLOCK ASSY.	
A18DS5		NOT ASSIGNED	
A18DS6	1970-0009	ELECTRON TUBE:INDICATOR 10 DIGIT	
A18Q1	1854-0003	TRANSISTOR:NPN SILICON	
A18Q2	1854-0003	TRANSISTOR:NPN SILICON	
A18Q3	1854-0003	TRANSISTOR:NPN SILICON	
A18Q4	1854-0003	TRANSISTOR:NPN SILICON	
A18Q5	1854-0003	TRANSISTOR:NPN SILICON	
A18Q6	1854-0003	TRANSISTOR:NPN SILICON	
A18Q7	1854-0003	TRANSISTOR:NPN SILICON	
A18Q8	1854-0003	TRANSISTOR:NPN SILICON	
A18R1	0686 4735	R:FXD COMP 47K OHM 5% 1/2W	
A18R2		NSR PART OF READOUT BLOCK ASSY.	
A18R3 THRU	-		
A18R5		NOT ASSIGNED	
A18R6	0683-3945	R:FXD COMP 390K OHMS 5% 1/4W	
A18R7	0683-3945	R:FXD COMP 390K OHMS 5% 1/4W	
A18R8	0683-3945	R:FXD COMP 390K OHMS 5% 1/4W	
A18R9	0683-3945	R:FXD COMP 390K OHMS 5% 1/4W	
A18R10	0683-5635	R:FXD COMP 56K OHMS 5% 1/4W	
A18R11	0683-5635	R:FXD COMP 56K OHMS 5% 1/4W	
A18R12	0683-5635	R:FXD COMP 56K OHMS 5% 1/4W	
A18R13	0683-5635	R:FXD COMP 56K OHMS 5% 1/4W	
A18R14	0683-5635	R:FXD COMP 56K OHMS 5% 1/4W	
A18R15	0683-5635	R:FXD COMP 56K OHMS 5% 1/4W	
A18R16	0683-5635	R:FXD COMP 56K OHMS 5% 1/4W	
A18R17	0683-5635	R:FXD COMP 56K OHMS 5% 1/4W	
A18R18	0683-2025	R:FXD COMP 2000 OHM 5% 1/4W	
A18R19	0683-7525	R:FXD COMP 7500 OHMS 5% 1/4W	
A18R20	0683-1545	R:FXD COMP 150K OHM 5% 1/4W	
A18R21	0683-5135	R:FXD COMP 51K OHM 5% 1/4W	
A18R22	0683-6805	R:FXD COMP 68 OHM 5% 1/4W	
A18R23		NOT ASSIGNED	
A18R24	0683-7525	R:FXD COMP 7500 OHMS 5% 1/4W	
A18R25	0683-1045	R:FXD COMP 100K OHM 5% 1/4W	
A18R26	0683-2025	R:FXD COMP 2000 OHM 5% 1/4W	
A18R27	0683-7525	R:FXD COMP 7500 OHMS 5% 1/4W	
A18R28	0683-1545	R:FXD COMP 150K OHM 5% 1/4W	
A18R29	0683-5135	R:FXD COMP 51K OHM 5% 1/4W	
A18R30	0683-9105	R:FXD COMP 910 OHM 5% 1/4W	
A18R31		NOT ASSIGNED	
A18R32	0683-7525	R:FXD COMP 7500 OHMS 5% 1/4W	
A18R33	0683-1045	R:FXD COMP 100K OHM 5% 1/4W	
A18R34	0683-2025	R:FXD COMP 2000 OHM 5% 1/4W	
A18R35	0683-7525	R:FXD COMP 7500 OHMS 5% 1/4W	
A18R36	0683-1545	R:FXD COMP 150K OHM 5% 1/4W	
A18R37	0683-5135	R:FXD COMP 51K OHM 5% 1/4W	

See list of abbreviations in introduction to this section

Table 4-1. Reference Designation Index (Cont'd)

Reference Designation	℗ Stock No.	Description #	Note
A18R38	0683-9105	R:FXD COMP 910 OHM 5% 1/4W	
A18R39		NOT ASSIGNED	
A18R40	0683-7525	R:FXD COMP 7500 OHMS 5% 1/4W	
A18R41	0683-1045	R:FXD COMP 100K OHM 5% 1/4W	
A18R42	0683-2025	R:FXD COMP 2000 OHM 5% 1/4W	
A18R43	0683-7525	R:FXD COMP 7500 OHMS 5% 1/4W	
A18R44	0683-1545	R:FXD COMP 150K OHM 5% 1/4W	
A18R45	0683-5135	R:FXD COMP 51K OHM 5% 1/4W	
A18R46	0683-9105	R:FXD COMP 910 OHM 5% 1/4W	
A18R47		NOT ASSIGNED	
A18R48	0683-7525	R:FXD COMP 7500 OHMS 5% 1/4W	
A18R49	0683-1045	R:FXD COMP 100K OHM 5% 1/4W	
A18V1		NSR PART OF READOUT BLOCK ASSY.	
A19	05245-6014	BOARD ASSY:INPUT AMPLIFIER	
	05245-2014	BOARD:BLANK PC	
A19C1	0160-0127	C:FXD CER 1UF 20% 25VDCW	
		FACTORY SELECTED PART:TYPICAL VALUE GIVEN	
A19C2	0150-0093	C:FXD CER 0.01UF +80-20 100VDCW	
A19C3	0150-0042	C:FXD TI 4.7 PF 5% 500VDCW	
A19C4	0150-0093	C:FXD CER 0.01UF +80-20 100VDCW	
A19C5	0150-0093	C:FXD CER 0.01UF +80-20 100VDCW	
A19C6	0150-0073	C:FXD CER 100 PF 10% 500VDCW	
A19C7	0160-0127	C:FXD CER 1UF 20% 25VDCW	
A19C8	0150-0093	C:FXD CER 0.01UF +80-20 100VDCW	
A19C9	0150-0061	C:FXD CER 20 PF 10% 100VDCW	
A19C10	0150-0093	C:FXD CER 0.01UF +80-20 100VDCW	
A19CR1	1901-0146	SEMICON DEVICE:DIODE SILICON	
A19CR2	1901-0040	SEMICON DEVICE:DIODE SILICON	
A19CR3	1901-0146	SEMICON DEVICE:DIODE SILICON	
A19CR4	1901-0040	SEMICON DEVICE:DIODE SILICON	
A19CR5	1902-0580	DIODE BREAKDOWN:SILICON	
A19CR6	1901-0040	SEMICON DEVICE:DIODE SILICON	
A19CR7	1901-0040	SEMICON DEVICE:DIODE SILICON	
A19Q1	1855-0036	TRANSISTOR:DUAL N CHAN FET	
A19Q2	1854-0249	TRANSISTOR:DUAL NPN SILICON	
A19Q3	1853-0015	TRANSISTOR:SILICON PNP 2N3640	
A19Q4	1853-0015	TRANSISTOR:SILICON PNP 2N3640	
A19Q5	1854-0009	TRANSISTOR:2N709 NPN SILICON	
A19Q6	1854-0009	TRANSISTOR:2N709 NPN SILICON	
A19R1	0757-0898	R:FXD MET FLM 82 OHM 2% 1/8W	
A19R2	0757-0924	R:FXD MET FLM 1K OHM 2% 1/8W	
A19R3	0757-0948	R:FXD MET FLM 10K OHM 2% 1/8W	
A19R4	0757-0950	R:FXD MET FLM 12K OHM 2% 1/8W	
A19R5	0757-0940	R:FXD MET FLM 4.7K OHM 2% 1/8W	
A19R6	0757-0952	R:FXD MET FLM 15K OHM 2% 1/8W	
A19R7	0757-0909	R:FXD MET FLM 240 OHM 2% 1/8W	
A19R8	0757-0932	R:FXD MET FLM 2.2K OHM 2% 1/8W	
A19R9	0757-0936	R:FXD MET FLM 3.3K OHM 2% 1/8W	

See list of abbreviations in introduction to this section

Table 4-1. Reference Designation Index (Cont'd)

Reference Designation	℗ Stock No.	Description #	Note
A19R10	0757-0916	R:FXD MET FLM 470 OHM 2% 1/8W	
A19R11	0757-0900	R:FXD MET FLM 100 OHM 2% 1/8W	
A19R12	0757-0904	R:FXD MET FLM 150 OHM 2% 1/8W	
A19R13	0757-0936	R:FXD MET FLM 3.3K OHM 2% 1/8W	
A19R14	0757-0916	R:FXD MET FLM 470 OHM 2% 1/8W	
A19R15	0757-0909	R:FXD MET FLM 240 OHM 2% 1/8W	
A19R16	0757-0932	R:FXD MET FLM 2.2K OHM 2% 1/8W	
A19R17	0757-0920	R:FXD MET FLM 680 OHM 2% 1/8W	
A19R18	0757-0952	R:FXD MET FLM 15K OHM 2% 1/8W	
A19R19	0757-0972	R:FXD MET FLM 100K OHM 2% 1/8W	
A19R20	2100-1513	R:VAR WW 50 OHM 5% 1W	
A19R21	0757-0930	R:FXD MET FLM 1.8K OHM 2% 1/8W	
A19R22	0757-0914	R:FXD MET FLM 390 OHM 2% 1/8W	
A19R23	0757-0902	R:FXD MET FLM 120 OHM 2% 1/8W	
A19R24	0757-0930	R:FXD MET FLM 1.8K OHM 2% 1/8W	
A19R25	0757-0948	R:FXD MET FLM 10K OHM 2% 1/8W	
A19R26	0757-0950	R:FXD MET FLM 12K OHM 2% 1/8W	
A20		SAME AS A19:USE PREFIX A20	
A21	05245-6015	BOARD ASSY:FUNCTION	
	05245-2015	BOARD:BLANK PC	
A21C1	0160-0127	C:FXD CER 1UF 20% 25VDCW	
A21C2	0150-0093	C:FXD CER 0.01UF +80-20 100VDCW	
A21C3	0150-0093	C:FXD CER 0.01UF +80-20 100VDCW	
A21C4	0170-0084	C:FXD MY 0.068UF 20% 50VDCW	
A21C5	0160-0127	C:FXD CER 1UF 20% 25VDCW	
A21C6	0160-0127	C:FXD CER 1UF 20% 25VDCW	
A21C7	0160-0127	C:FXD CER 1UF 20% 25VDCW	
A21C8	0160-0205	C:FXD MICA 10 PF 5%	
A21C9	0140-0203	C:FXD MICA 30PF 5% 500VDCW	
A21C10	0140-0203	C:FXD MICA 30PF 5% 500VDCW	
A21C11	0160-0205	C:FXD MICA 10 PF 5%	
A21C12	0150-0093	C:FXD CER 0.01UF +80-20 100VDCW	
A21C13	0140-0149	C:FXD MICA 470 PF 5% 300 VDCW	
A21C14	0140-0149	C:FXD MICA 470 PF 5% 300 VDCW	
A21C15	0140-0149	C:FXD MICA 470 PF 5% 300 VDCW	
A21C16	0140-0149	C:FXD MICA 470 PF 5% 300 VDCW	
A21C17	0150-0093	C:FXD CER 0.01UF +80-20 100VDCW	
A21C18	0160-0370	C:FXD MICA 20 PF 5%	
A21CR1	1910-0016	SEMICON DEVICE:DIODE GERMANIUM	
A21CR2	1910-0016	SEMICON DEVICE:DIODE GERMANIUM	
A21CR3	1910-0016	SEMICON DEVICE:DIODE GERMANIUM	
A21CR4	1910-0016	SEMICON DEVICE:DIODE GERMANIUM	
A21CR5	1910-0016	SEMICON DEVICE:DIODE GERMANIUM	
A21CR6	1910-0016	SEMICON DEVICE:DIODE GERMANIUM	
A21CR7	1910-0016	SEMICON DEVICE:DIODE GERMANIUM	
A21CR8	1910-0016	SEMICON DEVICE:DIODE GERMANIUM	
A21CR9	1901-0040	SEMICON DEVICE:DIODE SILICON	
A21CR10	1910-0016	SEMICON DEVICE:DIODE GERMANIUM	
A21CR11	1910-0016	SEMICON DEVICE:DIODE GERMANIUM	

See list of abbreviations in introduction to this section

Table 4-1. Reference Designation Index (Cont'd)

Reference Designation	℗ Stock No.	Description #	Note
A21CR12	1910-0016	SEMICON DEVICE:DIODE GERMANIUM	
A21CR13	1901-0025	DIODE JUNCTION:100 MA AT 1V 100PIV	
A21CR14	1901-0025	DIODE JUNCTION:100 MA AT 1V 100PIV	
A21CR15	1910-0016	SEMICON DEVICE:DIODE GERMANIUM	
A21CR16	1910-0016	SEMICON DEVICE:DIODE GERMANIUM	
A21CR17	1910-0016	SEMICON DEVICE:DIODE GERMANIUM	
A21L1	9140-0146	COIL:FXD RF 10 UH	
A21L2	9140-0146	COIL:FXD RF 10 UH	
A21L3	9140-0095	COIL:FXD RF 0.27 UH	
A21L4	9140-0159	COIL:FXD RF 0.47 UH	
A21Q1	1854-0019	TRANSISTOR:SILICON NPN	
A21Q2	1854-0005	TRANSISTOR:2N708 NPN SILICON PLANAR	
A21Q3	1854-0073	TRANSISTOR:2N3478 NPN SILICON	
A21Q4	1854-0073	TRANSISTOR:2N3478 NPN SILICON	
A21Q5	1854-0005	TRANSISTOR:2N708 NPN SILICON PLANAR	
A21Q6	1854-0005	TRANSISTOR:2N708 NPN SILICON PLANAR	
A21Q7	1854-0005	TRANSISTOR:2N708 NPN SILICON PLANAR	
A21Q8	1854-0005	TRANSISTOR:2N708 NPN SILICON PLANAR	
A21Q9	1854-0009	TRANSISTOR:2N709 NPN SILICON	
A21Q10	1853-0015	TRANSISTOR:SILICON PNP	
A21Q11	1853-0015	TRANSISTOR:SILICON PNP 2N3640	
A21Q12	1854-0005	TRANSISTOR:2N708 NPN SILICON PLANAR	
A21Q13	1854-0019	TRANSISTOR:SILICON NPN	
A21R1	0683-1615	R:FXD COMP 160 OHM 5% 1/4W	
A21R2	0683-1615	R:FXD COMP 160 OHM 5% 1/4W	
A21R3	0683-1035	R:FXD COMP 10K OHMS 5% 1/4W	
A21R4	0683-5125	R:FXD COMP 5100 OHM 5% 1/4W	
A21R5	0683-5125	R:FXD COMP 5100 OHM 5% 1/4W	
A21R6	0683-5125	R:FXD COMP 5100 OHM 5% 1/4W	
A21R7	0683-5125	R:FXD COMP 5100 OHM 5% 1/4W	
A21R8	0683-5125	R:FXD COMP 5100 OHM 5% 1/4W	
A21R9	0683-5125	R:FXD COMP 5100 OHM 5% 1/4W	
A21R10	0683-1035	R:FXD COMP 10K OHMS 5% 1/4W	
A21R11	0683-1035	R:FXD COMP 10K OHMS 5% 1/4W	
A21R12	0683-1035	R:FXD COMP 10K OHMS 5% 1/4W	
A21R13	0683-1035	R:FXD COMP 10K OHMS 5% 1/4W	
A21R14	0683-1035	R:FXD COMP 10K OHMS 5% 1/4W	
A21R15	0683-1035	R:FXD COMP 10K OHMS 5% 1/4W	
A21R16	0683-2025	R:FXD COMP 2000 OHM 5% 1/4W	
A21R17	0683-6225	R:FXD COMP 6200 OHMS 5% 1/4W	
A21R18	0683-2025	R:FXD COMP 2000 OHM 5% 1/4W	
A21R19	0683-6225	R:FXD COMP 6200 OHMS 5% 1/4W	
A21R20	0683-1025	R:FXD COMP 1000 OHM 5% 1/4W	
A21R21	0683-1025	R:FXD COMP 1000 OHM 5% 1/4W	
A21R22	0683-1815	R:FXD COMP 180 OHM 5% 1/4W	
A21R23	0683-1815	R:FXD COMP 180 OHM 5% 1/4W	
A21R24	0683-1815	R:FXD COMP 180 OHM 5% 1/4W	
A21R25	0683-4315	R:FXD COMP 430 OHMS 5% 1/4W	
A21R26	0683-4315	R:FXD COMP 430 OHMS 5% 1/4W	

See list of abbreviations in introduction to this section

Table 4-1. Reference Designation Index (Cont'd)

Reference Designation	℗ Stock No.	Description #	Note
A21R27	0683-4315	R:FXD COMP 430 OHMS 5% 1/4W	
A21R28	0683-3915	R:FXD COMP 390 OHMS 5% 1/4W	
A21R29	0683-6815	R:FXD COMP 680 OHMS 5% 1/4W	
A21R30	0683-6215	R:FXD COMP 620 OHM 5% 1/4W	
A21R31	2100-0737	R:VAR WW 200 OHM 5% 1W	
A21R32	0683-3915	R:FXD COMP 390 OHMS 5% 1/4W	
A21R33	0683-6815	R:FXD COMP 680 OHMS 5% 1/4W	
A21R34	0683-3915	R:FXD COMP 390 OHMS 5% 1/4W	
A21R35	0683-1115	R:FXD COMP 110 OHM 5% 1/4W	
A21R36	0683-4715	R:FXD COMP 470 OHM 5% 1/4W	
A21R37	0683-4715	R:FXD COMP 470 OHM 5% 1/4W	
A21R38	0683-2725	R:FXD COMP 2700 OHM 5% 1/4W	
A21R39	0683-5115	R:FXD COMP 510 OHMS 5% 1/4W	
A21R40	0683-4725	R:FXD COMP 4700 OHM 5% 1/4W	
A21R41	0683-4725	R:FXD COMP 4700 OHM 5% 1/4W	
A21R42	0683-5115	R:FXD COMP 510 OHMS 5% 1/4W	
A21R43	0683-4725	R:FXD COMP 4700 OHM 5% 1/4W	
A21R44	0683-4725	R:FXD COMP 4700 OHM 5% 1/4W	
A21R45	0683-6825	R:FXD COMP 6800 OHMS 5% 1/4W	
A21R46	0683-4735	R:FXD COMP 47K OHMS 5% 1/4W	
A21R47	0683-4735	R:FXD COMP 47K OHMS 5% 1/4W	
A21R48	0683-5115	R:FXD COMP 510 OHMS 5% 1/4W	
A21R49	0683-2415	R:FXD COMP 240 OHM 5% 1/4W	
A21R50	0683-1815	R:FXD COMP 180 OHM 5% 1/4W	
A21R51	0683-3315	R:FXD COMP 330 OHM 5% 1/4W	
A21R52	0683-1015	R:FXD COMP 100 OHM 5% 1/4W	
A21R53	0683-7515	R:FXD COMP 750 OHM 5% 1/4W	
A21R54	0683-1015	R:FXD COMP 100 OHM 5% 1/4W	
A21R55	0683-6805	R:FXD COMP 68 OHMS 5% 1/4W	
A22	5243A-65R	ASSY:GATE CONTROL	
	5243A-65R-1	BOARD:BLANK P.C.	
A22C1	0140-0192	C:FXD MICA 68PF 5% 300VDCW	
A22C2	0140-0192	C:FXD MICA 68PF 5% 300VDCW	
A22C3	0140-0191	C:FXD MICA 56 PF 5% 300 VDCW	
A22C4	0160-0369	C:FXD MICA 17PF 5%	
A22C5	0140-0208	C:FXD MICA 680PF 5% 300VDCW	
A22C6	0180-0100	C:FXD ELECT TA 4.7UF 10% 35VDCW	
A22C7	0140-0194	C:FXD MICA 110 PF 5% 300 VDCW	
A22C8	0140-0200	C:FXD MICA 390PF 5% 300VDCW	
A22C9	0140-0159	C:FXD MICA 3000PF 300VDCW	
A22C10	0140-0201	C:FXD MICA 12PF 5% 500VDCW	
A22C11	0140-0205	C:FXD MICA 62 PF 5% 300VDCW FACTORY SELECTED PART:TYPICAL VALUE GIVEN	
A22C12	0160-0163	C:FXD MY 3300PF 10%	
A22C13	0150-0047	C:FXD TI 6.8 PF 10% 500 VDCW	
A22C14	0150-0047	C:FXD TI 6.8 PF 10% 500 VDCW	
A22CR1	1910-0034	DIODE:GERMANIUM	
A22CR2	1910-0034	DIODE:GERMANIUM	
A22CR3	1901-0040	SEMICON DEVICE:DIODE SILICON	
A22CR4	1901-0040	SEMICON DEVICE:DIODE SILICON	

See list of abbreviations in introduction to this section

Table 4-1. Reference Designation Index (Cont'd)

Reference Designation	Stock No.	Description #	Note
A22CR5	1910-0016	SEMICON DEVICE:DIODE GERMANIUM	
A22CR6	1910-0016	SEMICON DEVICE:DIODE GERMANIUM	
A22CR7	1901-0040	SEMICON DEVICE:DIODE SILICON	
A22L1	9140-0142	COIL:FXD RF 2.2 UH	
A22L2	9140-0142	COIL:FXD RF 2.2 UH	
A22L3	9140-0142	COIL:FXD RF 2.2 UH	
A22Q1	1854-0005	TRANSISTOR:2N708 NPN SILICON PLANAR	
A22Q2	1854-0005	TRANSISTOR:2N708 NPN SILICON PLANAR	
A22Q3	1854-0005	TRANSISTOR:2N708 NPN SILICON PLANAR	
A22Q4	1854-0009	TRANSISTOR:SILICON NPN 2N709	
A22Q5	1854-0009	TRANSISTOR:SILICON NPN 2N709	
A22Q6	1854-0005	TRANSISTOR:2N708 NPN SILICON PLANAR	
A22Q7	1854-0005	TRANSISTOR:2N708 NPN SILICON PLANAR	
A22Q8	1851-0017	TRANSISTOR:2N1304	
A22Q9	1851-0017	TRANSISTOR:2N1304	
A22Q10	1851-0017	TRANSISTOR:2N1304	
A22Q11	1854-0008	TRANSISTOR:NPN SILICON	
A22R1	0683-3325	R:FXD COMP 3300 OHM 5% 1/4W	
A22R2	0683-7535	R:FXD COMP 75K OHM 5% 1/4W	
A22R3	0683-1035	R:FXD COMP 10K OHMS 5% 1/4W	
A22R4	0683-2425	R:FXD COMP 2400 OHMS 5% 1/4W	
A22R5	0683-1035	R:FXD COMP 10K OHMS 5% 1/4W	
A22R6	0683-2425	R:FXD COMP 2400 OHMS 5% 1/4W	
A22R7	0683-1325	R:FXD COMP 1300 OHMS 5% 1/4W	
A22R8	0683-2425	R:FXD COMP 2400 OHM 5% 1/4W	
A22R9	0683-6235	R:FXD COMP 62K OHM 5% 1/4W	
A22R10	0683-6235	R:FXD COMP 62K OHM 5% 1/4W	
A22R11	0683-2425	R:FXD COMP 2400 OHM 5% 1/4W	
A22R12	0683-1325	R:FXD COMP 1300 OHMS 5% 1/4W	
A22R13	0683-1035	R:FXD COMP 10K OHMS 5% 1/4W	
A22R14	0683-3325	R:FXD COMP 3300 OHM 5% 1/4W	
A22R15	0683-4725	R:FXD COMP 4700 OHM 5% 1/4W	
A22R16	0683-3325	R:FXD COMP 3300 OHM 5% 1/4W	
A22R17	0683-4725	R:FXD COMP 4700 OHM 5% 1/4W	
A22R18	0683-1035	R:FXD COMP 10K OHMS 5% 1/4W	
A22R19	0683-1035	R:FXD COMP 10K OHMS 5% 1/4W	
A22R20	0683-1545	R:FXD COMP 150K OHMS 5% 1/4W	
A22R21	0683-2015	R:FXD COMP 200 OHMS 5% 1/4W	
A22R22	0686-9115	R:FXD COMP 910 OHMS 5% 1/2W	
A22R23	0683-1025	R:FXD COMP 1000 OHM 5% 1/4W	
A22R24	0683-1325	R:FXD COMP 1300 OHMS 5% 1/4W	
A22R25	0683-1035	R:FXD COMP 10K OHMS 5% 1/4W	
A22R26	0683-4735	R:FXD COMP 47K OHMS 5% 1/4W	
A22R27	0683-1035	R:FXD COMP 10K OHMS 5% 1/4W	
A22R28	0683-1325	R:FXD COMP 1300 OHMS 5% 1/4W	
A22R29	0683-2725	R:FXD COMP 2700 OHMS 5% 1/4W	
A22R30	0683-2735	R:FXD COMP 27K OHM 5% 1/4W	
A22R31	0683-1045	R:FXD COMP 100K OHM 5% 1/4W	
A22R32	0683-1825	R:FXD COMP 1800 OHMS 5% 1/4W	

See list of abbreviations in introduction to this section

Table 4-1. Reference Designation Index (Cont'd)

Reference Designation	℗ Stock No.	Description #	Note
A22R33	0683-2735	R:FXD COMP 27K OHM 5% 1/4W	
A22R34	0683-4725	R:FXD COMP 4700 OHM 5% 1/4W	
A22R35	0683-1625	R:FXD COMP 1600 OHMS 5% 1/4W	
A22R36	0683-4725	R:FXD COMP 4700 OHM 5% 1/4W	
A22R37	0683-9135	R:FXD COMP 91K OHM 5% 1/4W	
A22R38	0683-4725	R:FXD COMP 4700 OHM 5% 1/4W	
A23	5243A-65S	ASSY:SAMPLING CONTROL	
	5243A-65S-1	BOARD:BLANK P.C.	
A23C1	0140-0159	C:FXD MICA 3000PF 300VDCW	
A23C2	0150-0093	C:FXD CER 0.01UF +80-20 100VDCW	
A23C3	0140-0156	C:FXD MICA 1500 PF 2% 300 VDCW	
A23C4	0180-0137	C:FXD ELECT TA 100 UF 20% 10VDCW	
A23C5	0180-0100	C:FXD ELECT TA 4.7UF 10% 35VDCW	
A23C6	0140-0149	C:FXD MICA 470 PF 5% 300 VDCW	
A23C7	0140-0162	C:FXD MICA 4700 PF 10% 300 VDCW	
A23C8	0180-0100	C:FXD ELECT TA 4.7UF 10% 35VDCW	
A23C9	0160-0161	C:FXD MY 0.01 UF 10% 200VDCW	
A23C10		NOT ASSIGNED	
A23C11	0140-0200	C:FXD MICA 390PF 5% 300VDCW	
A23C12	0150-0121	C:FXD CER 0.1UF +80%-20% 50VDCW	
A23C13	0150-0121	C:FXD CER 0.1UF +80%-20% 50VDCW	
A23CR1	1901-0025	SEMICON DEVICE:DIODE JUNCTION	
A23CR2	1901-0025	SEMICON DEVICE:DIODE JUNCTION	
A23CR3	1901-0040	SEMICON DEVICE:DIODE SILICON	
A23CR4	1901-0025	SEMICON DEVICE:DIODE JUNCTION	
A23CR5	1901-0025	SEMICON DEVICE:DIODE JUNCTION	
A23CR6	1901-0025	SEMICON DEVICE:DIODE JUNCTION	
A23CR7	1901-0025	SEMICON DEVICE:DIODE JUNCTION	
A23CR8	1901-0025	SEMICON DEVICE:DIODE JUNCTION	
A23CR9	1901-0040	SEMICON DEVICE:DIODE SILICON	
A23Q1	1851-0017	TRANSISTOR:2N1304	
A23Q2	1850-0040	TRANSISTOR:GERMANIUM 2N383 PNP	
A23Q3	1850-0062	TRANSISTOR:GERMANIUM	
A23Q4	1850-0062	TRANSISTOR:GERMANIUM	
A23Q5	1853-0001	TRANSISTOR:PNP SILICON 30V 900MW	
A23Q6	1850-0101	TRANSISTOR:SPL2N582	
A23Q7	1850-0040	TRANSISTOR:GERMANIUM 2N383 PNP	
A23Q8	1851-0024	TRANSISTOR:GE NPN 2N388A	
A23Q9	1850-0062	TRANSISTOR:GERMANIUM	
A23Q10	1850-0062	TRANSISTOR:GERMANIUM	
A23Q11	1851-0017	TRANSISTOR:GE NPN 2N1304	
A23Q12	1851-0017	TRANSISTOR:2N1304	
A23R1	0686-3025	R:FXD COMP 3000 OHM 5% 1/2W	
A23R2	0686-1325	R:FXD COMP 1.3K OHM 5% 1/2W	
A23R3	0686-2725	R:FXD COMP 2700 OHM 5% 1/2W	
A23R4	0686-1025	R:FXD COMP 1000 OHM 5% 1/2W	
A23R5	0686-1035	R:FXD COMP 10K OHM 5% 1/2W	
A23R6	0686-1035	R:FXD COMP 10K OHM 5% 1/2W	

See list of abbreviations in introduction to this section

Table 4-1. Reference Designation Index (Cont'd)

Reference Designation	Stock No.	Description #	Note
A23R7	0686-2225	R:FXD COMP 2200 OHM 5% 1/2W	
A23R8	0686-2225	R:FXD COMP 2200 OHM 5% 1/2W	
A23R9	0686-4735	R:FXD COMP 47K OHM 5% 1/2W	
A23R10	0686-1035	R:FXD COMP 10K OHM 5% 1/2W	
A23R11	0686-4735	R:FXD COMP 47K OHM 5% 1/2W	
A23R12	0686-4735	R:FXD COMP 47K OHM 5% 1/2W	
A23R13	0686-7525	R:FXD COMP 7500 OHM 5% 1/2W	
A23R14	0686-3625	R:FXD COMP 3600 OHM 5% 1/2W	
A23R15	0686-2225	R:FXD COMP 2200 OHM 5% 1/2W	
A23R16	0686-2035	R:FXD COMP 20K OHM 5% 1/2W	
A23R17	0686-9125	R:FXD COMP 9100 OHM 5% 1/2W	
A23R18	0758-0015	R:FXD MET FLM 220 OHMS 5% 1/2W	
A23R19	0686-1025	R:FXD COMP 1000 OHM 5% 1/2W	
A23R20	0686-2225	R:FXD COMP 2200 OHM 5% 1/2W	
A23R21	0686-1035	R:FXD COMP 10K OHM 5% 1/2W	
A23R22	0686-1325	R:FXD COMP 1.3K OHM 5% 1/2W	
A23R23	0686-4735	R:FXD COMP 47K OHM 5% 1/2W	
A23R24	0686-2035	R:FXD COMP 20K OHM 5% 1/2W	
A23R25	0686-1035	R:FXD COMP 10K OHM 5% 1/2W	
A23R26	0686-1525	R:FXD COMP 1500 OHM 5% 1/2W	
A23R27	0758-0015	R:FXD MET FLM 220 OHMS 5% 1/2W	
A23R28	0686-1035	R:FXD COMP 10K OHM 5% 1/2W	
A23R29	0686-2225	R:FXD COMP 2200 OHM 5% 1/2W	
A23R30	0686-2225	R:FXD COMP 2200 OHM 5% 1/2W	
A23R31	0686-1225	R:FXD COMP 1200 OHM 5% 1/2W	
A23R32	0686-4725	R:FXD COMP 4700 OHM 5% 1/2W	
A23R33	0686-4725	R:FXD COMP 4700 OHM 5% 1/2W	
A23R34	0686-2735	R:FXD COMP 27K OHM 5% 1/2W	
A23R35	0686-4715	R:FXD COMP 470 OHM 5% 1/2W	
A23R36	0686-4715	R:FXD COMP 470 OHM 5% 1/2W	
A24	5243A-69A	ASSY:CRYSTAL OVEN	
	5243A-69A-1	BOARD:BLANK P.C.	
A24C1	0130-0001	C:VAR CER 7-45PF 500VDCW	
A24C2	0160-0126	C:FXD PORC 160PF 2% 500VDCW	
A24C3	0140-0151	C:FXD MICA 820PF 2% 300VDCW	
A24C4	0140-0166	C:FXD MICA 0.017 UF 2% 300 VDCW	
A24C5	0140-0159	C:FXD MICA 3000PF 300VDCW	
A24C6	0170-0055	C:FXD MY 0.1UF 20% 200VDCW	
A24C7	0170-0040	C:FXD MY .047 UF 10% 200VDCW	
A24R1	0727-0081	R:FXD DEPC 600 OHM 1% 1/2W	
A24R2	0727-0105	R:FXD C-FLM 1200 OHM 1% 1/2W	
A24R3	0727-0387	R:FXD DEPC 442 OHM 1% 1/2W	
A24R4	2100-0354	R:VAR WW 1000 OHM 10% LIN 2W	
A24Y1		NSR:PART OF READOUT BLOCK ASSY	
A25	5243A-65T	ASSY:OVEN CONTROL	
	5243A-65T-1	BOARD:BLANK P.C.	
A25C1	0180-0100	C:FXD ELECT TA 4.7UF 10% 35VDCW	
A25C2	0180-0100	C:FXD ELECT TA 4.7UF 10% 35VDCW	

See list of abbreviations in introduction to this section

Table 4-1. Reference Designation Index (Cont'd)

Reference Designation	Stock No.	Description #	Note
A25C3	0180-0100	C:FXD ELECT TA 4.7UF 10% 35VDCW	
A25C4	0180-0049	C:FXD ELECT 20UF 50VDCW	
A25C5	0180-0100	C:FXD ELECT TA 4.7UF 10% 35VDCW	
A25C6	0170-0024	C:FXD MY 0.022 UF 20% 200VDCW	
A25C7	0180-0100	C:FXD ELECT 4.7 UF 10% 35VDCW	
A25CR1	1901-0025	SEMICON DEVICE:DIODE JUNCTION	
A25CR2	1901-0025	SEMICON DEVICE:DIODE JUNCTION	
A25CR3	1910-0016	SEMICON DEVICE:DIODE GERMANIUM	
A25CR4	1901-0026	SEMICON DEVICE:DIODE SI	
A25CR5	1901-0026	SEMICON DEVICE:DIODE SILICON 200PIV	
A25CR6	1901-0026	SEMICON DEVICE:DIODE SILICON 200PIV	
A25CR7	1901-0026	SEMICON DEVICE:DIODE SILICON 200PIV	
A25CR8	1901-0026	SEMICON DEVICE:DIODE SILICON 200PIV	
A25Q1	1850-0054	TRANSISTOR:GERMANIUM 2N652A PNP	
A25Q2	1853-0001	TRANSISTOR:PNP SILICON 30V 900MW	
A25Q3	1850-0054	TRANSISTOR:GERMANIUM 2N652A PNP	
A25Q4	1850-0092	TRANSISTOR:GERMANIUM 2N2043A PNP	
A25R1	0683-4325	R:FXD COMP 4300 OHM 5% 1/4W	
A25R2	0683-4325	R:FXD COMP 4300 OHM 5% 1/4W	
A25R3	0683-8215	R:FXD COMP 820 OHM 5% 1/4W	
A25R4	0683-1235	R:FXD COMP 12K OHM 5% 1/4W FACTORY SELECTED PART:TYPICAL VALUE GIVEN	
A25R5	0683-1835	R:FXD COMP 18K OHM 5% 1/4W	
A25R6	0699-0013	R:FXD COMP 6.8 OHM 10% 1W	
A25R7	0767-0001	R:FXD MET FLM 400 OHMS 5% 3W	
A25R8	0683-1015	R:FXD COMP 100 OHM 5% 1/4W	
A25R9	0683-2205	R:FXD COMP 22 OHM 5% 1/4W	
A25R10	0683-1515	R:FXD COMP 150 OHM 5% 1/4W	
A26	05245-6013	ASSY: OSCILLATOR BOARD	
	05245-2008	BOARD: BLANK PC	
A26C1	0160-0194	C:FXD MY 0.015UF 10%	
A26C2	0150-0093	C:FXD CER 0.01UF +80-20 100VDCW	
A26C3	0170-0084	C:FXD MY 0.068UF 20% 50VDCW	
A26C4	0160-0127	C:FXD CER 1UF 20% 25VDCW	
A26C5	0150-0093	C:FXD CER 0.01UF +80-20 100VDCW	
A26C6	0170-0084	C:FXD MY 0.068UF 20% 50VDCW	
A26C7	0140-0200	C:FXD MICA 390PF 5% 300VDCW	
A26C8	0150-0093	C:FXD CER 0.01UF +80-20 100VDCW	
A26C9	0150-0093	C:FXD CER 0.01UF +80-20 100VDCW	
A26C10	0160-0194	C:FXD MY 0.015UF 10%	
A26C11	0140-0190	C:FXD MICA 39 PF 5% 300 VDCW	
A26C12	0160-0194	C:FXD MY 0.015UF 10%	
A26C13	0170-0084	C:FXD MY 0.068UF 20% 50VDCW	
A26C14	0160-0194	C:FXD MY 0.015UF 10%	
A26C15	0150-0093	C:FXD CER 0.01UF +80-20 100VDCW	
A26C16	0150-0093	C:FXD CER 0.01UF +80-20 100VDCW	
A26C17	0150-0093	C:FXD CER 0.01UF +80-20 100VDCW	
A26C18	0160-0194	C:FXD MY 0.015UF 10%	
A26C19	0150-0093	C:FXD CER 0.01UF +80-20 100VDCW	
A26C20	0150-0050	C:FXD CER 1000PF 600 VDCW	

See list of abbreviations in introduction to this section

Table 4-1. Reference Designation Index (Cont'd)

Reference Designation	℗ Stock No.	Description #	Note
A26C21		NOT ASSIGNED	
A26C22	0140-0152	C:FXD MICA 1000 PF 5% 300VDCW	
A26C23	0150-0050	C:FXD CER 1000PF 600 VDCW	
A26C24	0140-0203	C:FXD MICA 30PF 5% 500VDCW	
A26C25	0150-0093	C:FXD CER 0.01UF +80-20 100VDCW	
A26C26	0180-0100	C:FXD ELECT TA 4.7UF 10% 35VDCW	
A26CR1	1910-0016	SEMICON DEVICE:DIODE GERMANIUM	
A26CR2	1910-0016	SEMICON DEVICE:DIODE GERMANIUM	
A26L1	9140-0138	COIL:FXD RF 180 UH	
A26L2	9140-0137	COIL:FXD RF 100 UH	
A26L3	9140-0137	COIL:FXD RF 100 UH	
A26L4	9140-0138	COIL:FXD RF 180 UH	
A26L5	9140-0138	COIL:FXD RF 180 UH	
A26Q1	1853-0009	TRANSISTOR:SILICON PNP	
A26Q2	1853-0009	TRANSISTOR:SILICON PNP	
A26Q3	1853-0009	TRANSISTOR:SILICON PNP	
A26Q4	1853-0009	TRANSISTOR:SILICON PNP	
A26Q5	1853-0009	TRANSISTOR:SILICON PNP	
A26Q6	1853-0009	TRANSISTOR:SILICON PNP	
A26Q7	1853-0009	TRANSISTOR:SILICON PNP	
A26R1	0683-1825	R:FXD COMP 1800 OHMS 5% 1/4W	
A26R2	0683-2225	R:FXD COMP 2.2K OHM 5% 1/4W	
A26R3	0683-3915	R:FXD COMP 390 OHMS 5% 1/4W	
A26R4	0683-3915	R:FXD COMP 390 OHMS 5% 1/4W	
A26R5	0683-3915	R:FXD COMP 390 OHMS 5% 1/4W	
A26R6	0683-3915	R:FXD COMP 390 OHMS 5% 1/4W	
A26R7	0683-1025	R:FXD COMP 1000 OHM 5% 1/4W	
A26R8	0683-3925	R:FXD COMP 3900 OHMS 5% 1/4W	
A26R9	0683-1535	R:FXD COMP 15K OHMS 5% 1/4W	
A26R10	0683-4725	R:FXD COMP 4700 OHM 5% 1/4W	
A26R11	0683-2725	R:FXD COMP 2700 OHMS 5% 1/4W	
A26R12	0683-2225	R:FXD COMP 2.2K OHM 5% 1/4W	
A26R13	0683-1235	R:FXD COMP 12K OHM 5% 1/4W	
A26R14	0683-2725	R:FXD COMP 2700 OHMS 5% 1/4W	
A26R15	0683-1305	R:FXD COMP 13 OHMS 5% 1/4W	
A26R16	0683-1825	R:FXD COMP 1800 OHMS 5% 1/4W	
A26R17	0683-1025	R:FXD COMP 1000 OHM 5% 1/4W	
A26R18	0683-2715	R:FXD COMP 270 OHMS 5% 1/4W	
A26R19	0683-6225	R:FXD COMP 6200 OHM 5% 1/4W	
A26R20	0683-2725	R:FXD COMP 2700 OHMS 5% 1/4W	
A26R21	0683-2215	R:FXD COMP 220 OHMS 5% 1/4W	
A26R22	0683-1025	R:FXD COMP 1000 OHM 5% 1/4W	
A26R23	0683-1525	R:FXD COMP 150 OHMS 5% 1/4W	
A26R24	0683-1015	R:FXD COMP 100 OHM 5% 1/4W	
A26R25	0683-1025	R:FXD COMP 1000 OHM 5% 1/4W	
A26R26	0683-1525	R:FXD COMP 1500 OHM 5% 1/4W	
A26R27	0683-3315	R:FXD COMP 330 OHM 5% 1/4W	
A26R28	0683-9125	R:FXD COMP 9100 OHM 5% 1/4W	
A26R29	0683-2725	R:FXD COMP 2700 OHMS 5% 1/4W	

See list of abbreviations in introduction to this section

Table 4-1. Reference Designation Index (Cont'd)

Reference Designation	℗ Stock No.	Description #	Note
A26R30	0757-0937	R:FXD MET FLM 3.6K OHM 2% 1/8W	
A26R31	0757-0914	R:FXD MET FLM 395 OHM 2% 1/8W	
A26R32	0683-1825	R:FXD COMP 1800 OHMS 5% 1/4W	
A26R33	0683-3025	R:FXD COMP 3000 OHM 5% 1/4W	
A26R34	0683-9115	R:FXD COMP 910 OHM 5% 1/4W	
A26R35	0683-9105	R:FXD COMP 91 OHM 5% 1/4W	
A26R36	0686-8215	R:FXD COMP 820 OHM 5% 1/2W	
A26R37	0758-0014	R:FXD MET OX 180 OHM 5%	
A26R38	0683-1825	R:FXD COMP 1800 OHM 5% 1/4W	
A27	5243A-65C	ASSY:MULTIPLIER	
	5243A-65C-1	BOARD:BLANK P.C.	
A27C1	0150-0093	C:FXD CER 0.01UF +80-20 100VDCW	
A27C2	0140-0196	C:FXD MICA 150 PF 5% 300 VDCW	
A27C3	0150-0093	C:FXD CER 0.01UF +80-20 100VDCW	
A27C4	0150-0093	C:FXD CER 0.01UF +80-20 100VDCW	
A27C5	0140-0200	C:FXD MICA 390PF 5% 300VDCW	
A27C6	0160-0194	C:FXD MY 0.015UF 10%	
A27C7	0140-0201	C:FXD MICA 12PF 5% 500VDCW	
A27C8	0140-0208	C:FXD MICA 680PF 5% 300VDCW	
A27C9	0160-0155	C:FXD MY 3300 PF 10%	
A27C10	0150-0093	C:FXD CER 0.01UF +80-20 100VDCW	
A27C11	0140-0192	C:FXD MICA 68PF 5% 300VDCW	
A27C12	0160-0194	C:FXD MY 0.015UF 10%	
A27C13	0140-0195	C:FXD MICA 130 PF 5% 300 VDCW	
A27C14	0160-0157	C:FXD MY 4700 PF 10%	
A27C15	0150-0093	C:FXD CER 0.01UF +80-20 100VDCW	
A27C16	0140-0199	C:FXD MICA 240PF 5% 300VDCW	
A27C17	0160-0194	C:FXD MY 0.015UF 10%	
A27C18	0140-0209	C:FXD MICA 5PF 10% 500VDCW	
A27C19	0140-0199	C:FXD MICA 240PF 5% 300VDCW	
A27C20	0140-0200	C:FXD MICA 390PF 5% 300VDCW	
A27L1	9140-0127	COIL:VAR 8.3-18.7 UH	
A27L2	9140-0127	COIL:VAR 8.3-18.7 UH	
A27L3	9140-0126	COIL:VAR 1.76-4.02 UH	
A27L4	9140-0126	COIL:VAR 1.76-4.02 UH	
A27L5	9140-0125	COIL:VAR 0.9-1.9 UH	
A27L6	9140-0125	COIL:VAR 0.9-1.9 UH	
A27Q1	1850-0091	TRANSISTOR:GERMANIUM 2N2048 PNP	
A27Q2	1850-0091	TRANSISTOR:GERMANIUM 2N2048 PNP	
A27Q3	1850-0091	TRANSISTOR:GERMANIUM 2N2048 PNP	
A27R1	0683-1525	R:FXD COMP 150 OHMS 5% 1/4W	
A27R2	0683-1015	R:FXD COMP 100 OHMS 5% 1/4W	
A27R3	0683-1015	R:FXD COMP 100 OHMS 5% 1/4W	
A27R4	0683-1635	R:FXD COMP 16K OHMS 5% 1/4W	
A27R5	0683-5125	R:FXD COMP 5100 OHMS 5% 1/4W	
A27R6	0683-2225	R:FXD COMP 2.2K OHM 5% 1/4W	
A27R7	0683-4715	R:FXD COMP 470 OHM 5% 1/4W	
A27R8	0683-1135	R:FXD COMP 11K OHM 5% 1/4W	
A27R9	0683-2225	R:FXD COMP 2.2K OHM 5% 1/4W	

See list of abbreviations in introduction to this section

Table 4-1. Reference Designation Index (Cont'd)

Reference Designation	℗ Stock No.	Description #	Note
A27R10	0683-2225	R:FXD COMP 2.2K OHM 5% 1/4W	
A27R11	0683-1015	R:FXD COMP 100 OHMS 5% 1/4W	
A27R12	0683-9125	R:FXD COMP 9100 OHMS 5% 1/4W	
A27R13	0683-2225	R:FXD COMP 2.2K OHM 5% 1/4W	
A27R14	0683-6815	R:FXD COMP 680 OHMS 5% 1/4W	
A27R15	0683-1015	R:FXD COMP 100 OHMS 5% 1/4W	
A27R16	0683-4715	R:FXD COMP 470 OHM 5% 1/4W	
A27R17	0683-1015	R:FXD COMP 100 OHMS 5% 1/4W	
A28	05232-6009	DECADE DIVIDER ASSEMBLY	
A28C1	0140-0191	C:FXD MICA 56 PF 5% 300 VDCW	
A28C2	0140-0193	C:FXD MICA 82 PF 5% 300 VDCW	
A28C3	0150-0121	C:FXD CER 0.1UF +80%-20% 50VDCW	
A28C4	0140-0191	C:FXD MICA 56 PF 5% 300 VDCW	
A28C5	0150-0122	C:FXD CER 2000PF 20% 500VDCW	
A28C6	0140-0191	C:FXD MICA 56 PF 5% 300 VDCW	
A28C7	0160-0181	C:FXD MICA 30PF 5% 300VDCW	
A28C8	0140-0192	C:FXD MICA 68PF 5% 300VDCW	
A28C9	0140-0192	C:FXD MICA 68PF 5% 300VDCW	
A28C10	0140-0193	C:FXD MICA 82 PF 5% 300 VDCW	
A28C11	0140-0193	C:FXD MICA 82 PF 5% 300 VDCW	
A28C12	0140-0195	C:FXD MICA 130 PF 5% 300 VDCW	
A28C13	0140-0193	C:FXD MICA 82 PF 5% 300 VDCW	
A28C14	0140-0193	C:FXD MICA 82 PF 5% 300 VDCW	
A28C15	0140-0176	C:FXD MICA 100 PF 2% 300 VDCW	
A28C16	0140-0195	C:FXD MICA 130 PF 5% 300 VDCW	
A28CR1	1901-0040	DIODE,SILICON:30 MA AT 1V 30 PIV	
A28CR2	1901-0040	DIODE,SILICON:30 MA AT 1V 30 PIV	
A28CR3	1901-0040	DIODE,SILICON:30 MA AT 1V 30 PIV	
A28CR4	1901-0040	DIODE,SILICON:30 MA AT 1V 30 PIV	
A28CR5	1901-0040	DIODE,SILICON:30 MA AT 1V 30 PIV	
A28CR6	1901-0040	DIODE,SILICON:30 MA AT 1V 30 PIV	
A28CR7	1901-0040	DIODE,SILICON:30 MA AT 1V 30 PIV	
A28CR8	1901-0040	DIODE,SILICON:30 MA AT 1V 30 PIV	
A28CR9	1901-0040	DIODE,SILICON:30 MA AT 1V 30 PIV	
A28CR10	1901-0040	DIODE,SILICON:30 MA AT 1V 30 PIV	
A28CR11	1901-0040	DIODE,SILICON:30 MA AT 1V 30 PIV	
A28Q1	1853-0009	TRANSISTOR:SILICON PNP	
A28Q2	1853-0009	TRANSISTOR:SILICON PNP	
A28Q3	1853-0009	TRANSISTOR:SILICON PNP	
A28Q4	1853-0009	TRANSISTOR:SILICON PNP	
A28Q5	1853-0009	TRANSISTOR:SILICON PNP	
A28Q6	1853-0009	TRANSISTOR:SILICON PNP	
A28Q7	1853-0009	TRANSISTOR:SILICON PNP	
A28Q8	1853-0009	TRANSISTOR:SILICON PNP	
A28R1	0683-2725	R:FXD COMP 2700 OHM 5% 1/4W	
A28R2	0758-0024	R:FXD MET FLM 100 OHM 5% 1/2W	
A28R3	0758-0043	R:FXD MET FLM 1800 OHM 5% 1/2W	
A28R4	0683-1035	R:FXD COMP 10K OHM 5% 1/4 W	

See list of abbreviations in introduction to this section

Table 4-1. Reference Designation Index (Cont'd)

Reference Designation	℗ Stock No.	Description #	Note
A28R5	0683-3325	R:FXD COMP 3300 OHM 5% 1/4W	
A28R6	0683-2235	R:FXD COMP 22K OHM 5% 1/4W	
A28R7	0683-6205	R:FXD COMP 62 OHM 5% 1/4W	
A28R8	0683-1115	R:FXD COMP 110 OHM 5% 1/4W	
A28R9	0683-2235	R:FXD COMP 22K OHM 5% 1/4W	
A28R10	0683-6205	R:FXD COMP 62 OHM 5% 1/4W	
A28R11	0683-2235	R:FXD COMP 22K OHM 5% 1/4W	
A28R12	0758-0043	R:FXD MET FLM 1800 OHM 5% 1/2W	
A28R13	0683-1035	R:FXD COMP 10K OHM 5% 1/4 W	
A28R14	0683-3325	R:FXD COMP 3300 OHM 5% 1/4W	
A28R15	0683-2735	R:FXD COMP 27K OHM 5% 1/4W	
A28R16	0758-0043	R:FXD MET FLM 1800 OHM 5% 1/2W	
A28R17	0683-1035	R:FXD COMP 10K OHM 5% 1/4 W	
A28R18	0683-3325	R:FXD COMP 3300 OHM 5% 1/4W	
A28R19	0683-2235	R:FXD COMP 22K OHM 5% 1/4W	
A28R20	0683-6205	R:FXD COMP 62 OHM 5% 1/4W	
A28R21	0683-1115	R:FXD COMP 110 OHM 5% 1/4W	
A28R22	0683-1025	R:FXD COMP 1000 OHM 5% 1/4W	
A28R23	0683-6205	R:FXD COMP 62 OHM 5% 1/4W	
A28R24	0683-2235	R:FXD COMP 22K OHM 5% 1/4W	
A28R25	0758-0043	R:FXD MET FLM 1800 OHM 5% 1/2W	
A28R26	0683-1035	R:FXD COMP 10K OHM 5% 1/4 W	
A28R27	0683-3325	R:FXD COMP 3300 OHM 5% 1/4W	
A28R28	0758-0004	R:FXD MET FLM 2700 OHM 5% 1/2W	
A28R29	0683-1235	R:FXD COMP 12K OHM 5% 1/4W	
A28R30	0683-2725	R:FXD COMP 2700 OHM 5% 1/4W	
A28R31	0683-2235	R:FXD COMP 22K OHM 5% 1/4W	
A28R32	0683-2205	R:FXD COMP 22 OHM 5% 1/4W	
A28R33	0683-1115	R:FXD COMP 110 OHM 5% 1/4W	
A28R34	0683-1025	R:FXD COMP 1000 OHM 5% 1/4W	
A28R35	0683-2235	R:FXD COMP 22K OHM 5% 1/4W	
A28R36	0683-4705	R:FXD COMP 47 OHM 5% 1/4W	
A28R37	0683-2235	R:FXD COMP 22K OHM 5% 1/4W	
A28R38	0758-0004	R:FXD MET FLM 2700 OHM 5% 1/2W	
A28R39	0683-1235	R:FXD COMP 12K OHM 5% 1/4W	
A28R40	0683-2725	R:FXD COMP 2700 OHM 5% 1/4W	
A28R41	0683-5635	R:FXD COMP 56K OHM 5% 1/4W	
A28R42	0683-3025	R:FXD COMP 3000 OHM 5% 1/4W	
A28R43	0758-0004	R:FXD MET FLM 2700 OHM 5% 1/2W	
A28R44	0683-1235	R:FXD COMP 12K OHM 5% 1/4W	
A28R45	0683-2725	R:FXD COMP 2700 OHM 5% 1/4W	
A28R46	0683-2235	R:FXD COMP 22K OHM 5% 1/4W	
A28R47	0683-6805	R:FXD COMP 68 OHM 5% 1/4W	
A28R48	0683-1025	R:FXD COMP 1000 OHM 5% 1/4W	
A28R49	0683-2235	R:FXD COMP 22K OHM 5% 1/4W	
A28R50	0683-2235	R:FXD COMP 22K OHM 5% 1/4W	
A28R51	0758-0004	R:FXD MET FLM 2700 OHM 5% 1/2W	
A28R52	0683-1035	R:FXD COMP 10K OHMS 5% 1/4W	
A28R53	0683-3325	R:FXD COMP 3300 OHM 5% 1/4W	

See list of abbreviations in introduction to this section

Table 4-1. Reference Designation Index (Cont'd)

Reference Designation	℗ Stock No.	Description #	Note
A29	5212A-65C 5212A-65C-1	ASSY:DECADE DIVIDER BOARD:BLANK P.C.	
A29C1	0150-0121	C:FXD CER 0.1UF 50 VDCW	
A29C2	0140-0194	C:FXD MICA 110 PF 5% 300 VDCW	
A29C3	0140-0195	C:FXD MICA 130 PF 5% 300 VDCW	
A29C4	0140-0195	C:FXD MICA 130 PF 5% 300 VDCW	
A29C5	0140-0196	C:FXD MICA 150 PF 5% 300 VDCW	
A29C6	0140-0196	C:FXD MICA 150 PF 5% 300 VDCW	
A29C7	0140-0196	C:FXD MICA 150 PF 5% 300 VDCW	
A29C8	0140-0199	C:FXD MICA 240PF 5% 300VDCW	
A29C9	0140-0195	C:FXD MICA 130 PF 5% 300 VDCW	
A29C10	0140-0195	C:FXD MICA 130 PF 5% 300 VDCW	
A29C11	0140-0194	C:FXD MICA 110 PF 5% 300 VDCW	
A29C12	0140-0198	C:FXD MICA 200PF 5% 300VDCW	
A29C13	0140-0198	C:FXD MICA 200PF 5% 300VDCW	
A29C14	0140-0200	C:FXD MICA 390PF 5% 300VDCW	
A29CR1	1910-0016	SEMICON DEVICE:DIODE GERMANIUM	
A29CR2	1910-0016	SEMICON DEVICE:DIODE GERMANIUM	
A29CR3	1910-0016	SEMICON DEVICE:DIODE GERMANIUM	
A29CR4	1910-0016	SEMICON DEVICE:DIODE GERMANIUM	
A29CR5	1910-0016	SEMICON DEVICE:DIODE GERMANIUM	
A29Q1	1850-0062	TRANSISTOR:GERMANIUM	
A29Q2	1850-0062	TRANSISTOR:GERMANIUM	
A29Q3	1850-0062	TRANSISTOR:GERMANIUM	
A29Q4	1850-0062	TRANSISTOR:GERMANIUM	
A29Q5	1850-0062	TRANSISTOR:GERMANIUM	
A29Q6	1850-0062	TRANSISTOR:GERMANIUM	
A29Q7	1850-0062	TRANSISTOR:GERMANIUM	
A29Q8	1850-0062	TRANSISTOR:GERMANIUM	
A29R1	0683-3915	R:FXD COMP 390 OHMS 5% 1/4W	
A29R2	0683-4735	R:FXD COMP 47K OHMS 5% 1/4W	
A29R3	0683-6825	R:FXD COMP 6800 OHMS 5% 1/4W	
A29R4	0683-4735	R:FXD COMP 47K OHMS 5% 1/4W	
A29R5	0683-1035	R:FXD COMP 10K OHMS 5% 1/4W	
A29R6	0683-3925	R:FXD COMP 3900 OHMS 5% 1/4W	
A29R7	0683-2015	R:FXD COMP 200 OHMS 5% 1/4W	
A29R8	0683-3925	R:FXD COMP 3900 OHMS 5% 1/4W	
A29R9	0683-6825	R:FXD COMP 6800 OHMS 5% 1/4W	
A29R10	0683-4735	R:FXD COMP 47K OHMS 5% 1/4W	
A29R11	0683-1035	R:FXD COMP 10K OHMS 5% 1/4W	
A29R12	0683-4735	R:FXD COMP 47K OHMS 5% 1/4W	
A29R13	0683-4735	R:FXD COMP 47K OHMS 5% 1/4W	
A29R14	0683-6825	R:FXD COMP 6800 OHMS 5% 1/4W	
A29R15	0683-4735	R:FXD COMP 47K OHMS 5% 1/4W	
A29R16	0683-8225	R:FXD COMP 8200 OHMS 5% 1/4W	
A29R17	0683-3925	R:FXD COMP 3900 OHMS 5% 1/4W	
A29R18	0683-2015	R:FXD COMP 200 OHMS 5% 1/4W	
A29R19	0683-3925	R:FXD COMP 3900 OHMS 5% 1/4W	
A29R20	0683-6825	R:FXD COMP 6800 OHMS 5% 1/4W	
A29R21	0683-4735	R:FXD COMP 47K OHMS 5% 1/4W	

See list of abbreviations in introduction to this section

Table 4-1. Reference Designation Index (Cont'd)

Reference Designation	Stock No.	Description #	Note
A29R22	0683-1035	R:FXD COMP 10K OHMS 5% 1/4W	
A29R23	0683-4735	R:FXD COMP 47K OHMS 5% 1/4W	
A29R24	0683-6835	R:FXD COMP 68K OHM 5% 1/4W	
A29R25	0683-4735	R:FXD COMP 47K OHMS 5% 1/4W	
A29R26	0683-6825	R:FXD COMP 6800 OHMS 5% 1/4W	
A29R27	0683-4735	R:FXD COMP 47K OHMS 5% 1/4W	
A29R28	0683-1035	R:FXD COMP 10K OHMS 5% 1/4W	
A29R29	0683-3925	R:FXD COMP 3900 OHMS 5% 1/4W	
A29R30	0683-2015	R:FXD COMP 200 OHMS 5% 1/4W	
A29R31	0683-3925	R:FXD COMP 3900 OHMS 5% 1/4W	
A29R32	0683-6825	R:FXD COMP 6800 OHMS 5% 1/4W	
A29R33	0683-4735	R:FXD COMP 47K OHMS 5% 1/4W	
A29R34	0683-8225	R:FXD COMP 8200 OHMS 5% 1/4W	
A29R35	0683-4735	R:FXD COMP 47K OHMS 5% 1/4W	
A29R36	0683-4735	R:FXD COMP 47K OHMS 5% 1/4W	
A29R37	0683-6825	R:FXD COMP 6800 OHMS 5% 1/4W	
A29R38	0683-4735	R:FXD COMP 47K OHMS 5% 1/4W	
A29R39	0683-1035	R:FXD COMP 10K OHMS 5% 1/4W	
A29R40	0683-3925	R:FXD COMP 3900 OHMS 5% 1/4W	
A29R41	0683-2015	R:FXD COMP 200 OHMS 5% 1/4W	
A29R42	0683-3925	R:FXD COMP 3900 OHMS 5% 1/4W	
A29R43	0683-6825	R:FXD COMP 6800 OHMS 5% 1/4W	
A29R44	0683-4735	R:FXD COMP 47K OHMS 5% 1/4W	
A29R45	0683-1035	R:FXD COMP 10K OHMS 5% 1/4W	
A29R46	0683-4735	R:FXD COMP 47K OHMS 5% 1/4W	
A30	5212A-65C	SAME AS A29;USE PREFIX A30	
A31	5212A-65C	SAME AS A29;USE PREFIX A31	
A32	5212A-65C	SAME AS A29;USE PREFIX A32	
A33	5212A-65C	SAME AS A29;USE PREFIX A33	
A34	5212A-65C	SAME AS A29;USE PREFIX A34	
A35	5243A-65J	ASSY:TIME-BASE CONTROL	
	5243A-65J-1	BOARD:BLANK P.C.	
A35C1	0160-0134	C:FXD MICA 220PF 5% 300VDCW	
A35C2	0160-0134	C:FXD MICA 220PF 5% 300VDCW	
A35C3	0140-0194	C:FXD MICA 110 PF 5% 300 VDCW	
A35C4	0160-0134	C:FXD MICA 220PF 5% 300VDCW	
A35C5	0160-0134	C:FXD MICA 220PF 5% 300VDCW	
A35C6	0140-0194	C:FXD MICA 110 PF 5% 300 VDCW	
A35C7	0160-0134	C:FXD MICA 220PF 5% 300VDCW	
A35C8	0160-0134	C:FXD MICA 220PF 5% 300VDCW	
A35C9	0140-0194	C:FXD MICA 110 PF 5% 300 VDCW	
A35C10	0160-0134	C:FXD MICA 220PF 5% 300VDCW	
A35C11	0160-0134	C:FXD MICA 220PF 5% 300VDCW	
A35C12	0140-0194	C:FXD MICA 110 PF 5% 300 VDCW	
A35C13	0160-0134	C:FXD MICA 220PF 5% 300VDCW	
A35C14	0160-0134	C:FXD MICA 220PF 5% 300VDCW	
A35C15	0140-0194	C:FXD MICA 110 PF 5% 300 VDCW	
A35CR1	1910-0016	SEMICON DEVICE:DIODE GERMANIUM	
A35CR2	1910-0016	SEMICON DEVICE:DIODE GERMANIUM	
A35CR3	1910-0016	SEMICON DEVICE:DIODE GERMANIUM	

See list of abbreviations in introduction to this section

Table 4-1. Reference Designation Index (Cont'd)

Reference Designation	Stock No.	Description #	Note
A35CR4	1910-0016	SEMICON DEVICE:DIODE GERMANIUM	
A35CR5	1910-0016	SEMICON DEVICE:DIODE GERMANIUM	
A35CR6	1901-0025	SEMICON DEVICE:DIODE JUNCTION	
A35CR7	1901-0025	SEMICON DEVICE:DIODE JUNCTION	
A35CR8	1901-0025	SEMICON DEVICE:DIODE JUNCTION	
A35CR9	1901-0025	SEMICON DEVICE:DIODE JUNCTION	
A35CR10	1901-0025	SEMICON DEVICE:DIODE JUNCTION	
A35CR11	1901-0025	SEMICON DEVICE:DIODE JUNCTION	
A35CR12	1901-0025	SEMICON DEVICE:DIODE JUNCTION	
A35CR13	1901-0025	SEMICON DEVICE:DIODE JUNCTION	
A35CR14	1901-0025	SEMICON DEVICE:DIODE JUNCTION	
A35CR15	1901-0025	SEMICON DEVICE:DIODE JUNCTION	
A35CR16	1901-0025	SEMICON DEVICE:DIODE JUNCTION	
A35CR17	1901-0025	SEMICON DEVICE:DIODE JUNCTION	
A35CR18	1901-0025	SEMICON DEVICE:DIODE JUNCTION	
A35CR19	1901-0025	SEMICON DEVICE:DIODE JUNCTION	
A35CR20	1901-0025	SEMICON DEVICE:DIODE JUNCTION	
A35CR21	1901-0025	SEMICON DEVICE:DIODE JUNCTION	
A35CR22	1901-0025	SEMICON DEVICE:DIODE JUNCTION	
A35CR23	1901-0025	SEMICON DEVICE:DIODE JUNCTION	
A35E1	9170-0016	BEAD:MAGNETIC	
A35Q1	1850-0040	TRANSISTOR:GERMANIUM 2N383 PNP	
A35Q2	1854-0005	TRANSISTOR:2N708 NPN SILICON PLANAR	
A35Q3	1850-0062	TRANSISTOR:GERMANIUM	
A35Q4	1850-0062	TRANSISTOR:GERMANIUM	
A35Q5	1850-0062	TRANSISTOR:GERMANIUM	
A35Q6	1850-0062	TRANSISTOR:GERMANIUM	
A35Q7	1850-0062	TRANSISTOR:GERMANIUM	
A35Q8	1850-0062	TRANSISTOR:GERMANIUM	
A35Q9	1850-0062	TRANSISTOR:GERMANIUM	
A35Q10	1854-0005	TRANSISTOR:2N708 NPN SILICON PLANAR	
A35Q11	1854-0005	TRANSISTOR:2N708 NPN SILICON PLANAR	
A35Q12	1854-0005	TRANSISTOR:2N708 NPN SILICON PLANAR	
A35R1	0758-0054	R:FXD MET FLM 330 OHMS 5% 1/2W	
A35R2	0689-1525	R:FXD COMP 1500 OHM 5% 1W	
A35R3	0683-2025	R:FXD COMP 2000 OHMS 5% 1/4W	
A35R4	0683-3025	R:FXD COMP 3000 OHMS 5% 1/4W	
A35R5	0686-1825	R:FXD COMP 1800 OHM 5% 1/2W	
A35R6	0683-3025	R:FXD COMP 3000 OHMS 5% 1/4W	
A35R7	0683-1035	R:FXD COMP 10K OHMS 5% 1/4W	
A35R8	0683-3025	R:FXD COMP 3000 OHMS 5% 1/4W	
A35R9	0683-1035	R:FXD COMP 10K OHMS 5% 1/4W	
A35R10	0683-3025	R:FXD COMP 3000 OHMS 5% 1/4W	
A35R11	0683-1535	R:FXD COMP 15K OHMS 5% 1/4W	
A35R12	0683-1035	R:FXD COMP 10K OHMS 5% 1/4W	
A35R13	0683-3025	R:FXD COMP 3000 OHMS 5% 1/4W	
A35R14	0683-1535	R:FXD COMP 15K OHMS 5% 1/4W	
A35R15	0683-1035	R:FXD COMP 10K OHMS 5% 1/4W	
A35R16	0683-4735	R:FXD COMP 47K OHMS 5% 1/4W	

See list of abbreviations in introduction to this section

Table 4-1. Reference Designation Index (Cont'd)

Reference Designation	hp Stock No.	Description #	Note
A35R17	0683-4735	R:FXD COMP 47K OHMS 5% 1/4W	
A35R18	0683-1845	R:FXD COMP 180K OHMS 5% 1/4W	
A35R19	0683-4725	R:FXD COMP 4700 OHM 5% 1/4W	
A35R20	0683-4725	R:FXD COMP 4700 OHM 5% 1/4W	
A35R21	0683-3025	R:FXD COMP 3000 OHMS 5% 1/4W	
A35R22	0683-1535	R:FXD COMP 15K OHMS 5% 1/4W	
A35R23	0683-1035	R:FXD COMP 10K OHMS 5% 1/4W	
A35R24	0683-4735	R:FXD COMP 47K OHMS 5% 1/4W	
A35R25	0683-4735	R:FXD COMP 47K OHMS 5% 1/4W	
A35R26	0683-1845	R:FXD COMP 180K OHMS 5% 1/4W	
A35R27	0683-4725	R:FXD COMP 4700 OHM 5% 1/4W	
A35R28	0683-4725	R:FXD COMP 4700 OHM 5% 1/4W	
A35R29	0683-3025	R:FXD COMP 3000 OHMS 5% 1/4W	
A35R30	0683-1535	R:FXD COMP 15K OHMS 5% 1/4W	
A35R31	0683-1035	R:FXD COMP 10K OHMS 5% 1/4W	
A35R32	0683-4735	R:FXD COMP 47K OHMS 5% 1/4W	
A35R33	0683-4735	R:FXD COMP 47K OHMS 5% 1/4W	
A35R34	0683-1845	R:FXD COMP 180K OHMS 5% 1/4W	
A35R35	0683-4725	R:FXD COMP 4700 OHM 5% 1/4W	
A35R36	0683-4725	R:FXD COMP 4700 OHM 5% 1/4W	
A35R37	0683-3025	R:FXD COMP 3000 OHMS 5% 1/4W	
A35R38	0683-1535	R:FXD COMP 15K OHMS 5% 1/4W	
A35R39	0683-1035	R:FXD COMP 10K OHMS 5% 1/4W	
A35R40	0683-4735	R:FXD COMP 47K OHMS 5% 1/4W	
A35R41	0683-4735	R:FXD COMP 47K OHMS 5% 1/4W	
A35R42	0683-1845	R:FXD COMP 180K OHMS 5% 1/4W	
A35R43	0683-4725	R:FXD COMP 4700 OHM 5% 1/4W	
A35R44	0683-4725	R:FXD COMP 4700 OHM 5% 1/4W	
A35R45	0683-3025	R:FXD COMP 3000 OHMS 5% 1/4W	
A35R46	0683-1535	R:FXD COMP 15K OHMS 5% 1/4W	
A35R47	0683-1035	R:FXD COMP 10K OHMS 5% 1/4W	
A35R48	0683-4735	R:FXD COMP 47K OHMS 5% 1/4W	
A35R49	0683-4735	R:FXD COMP 47K OHMS 5% 1/4W	
A35R50	0683-1845	R:FXD COMP 180K OHMS 5% 1/4W	
A35R51	0683-4725	R:FXD COMP 4700 OHM 5% 1/4W	
A35R52	0683-4725	R:FXD COMP 4700 OHM 5% 1/4W	
A35R53	0683-3025	R:FXD COMP 3000 OHMS 5% 1/4W	
A35R54	0683-1535	R:FXD COMP 15K OHMS 5% 1/4W	
A35R55	0683-1035	R:FXD COMP 10K OHMS 5% 1/4W	
A35R56	0683-5635	R:FXD COMP 56K OHMS 5% 1/4W	
A35R57	0683-2435	R:FXD COMP 24K OHM 5% 1/4W	
A35R58	0683-2025	R:FXD COMP 2000 OHMS 5% 1/4W	
A35R59	0683-3025	R:FXD COMP 3000 OHMS 5% 1/4W	
A35R60	0683-2025	R:FXD COMP 2000 OHMS 5% 1/4W	
A35R61	0683-4715	R:FXD COMP 470 OHM 5% 1/4W	
A35R62	0683-1025	R:FXD COMP 1000 OHM 5% 1/4W	
A35R63	0683-2025	R:FXD COMP 2000 OHMS 5% 1/4W	
A35R64	0683-2025	R:FXD COMP 2000 OHMS 5% 1/4W	
A35R65	0683-2025	R:FXD COMP 2000 OHMS 5% 1/4W	

See list of abbreviations in introduction to this section

Table 4-1. Reference Designation Index (Cont'd)

Reference Designation	Stock No.	Description #	Note
B1	3140-0052	MOTOR:ELECTRICAL SHADED POLE 115V 3470 RPM	
C1	0170-0073	C:FXD MY 1UF 10% 600VDCW	
C2	0130-0003	C:VAR CER 1.5-7 PF 500VDCW	
C3	0121-0013	C:VAR AIR 6-100.5PF	
C4	0180-0047	C:FXD ELECT 500UF 75VDCW	
C5	0150-0119	C:FXD CER 2X(.01UF) 20% 250VDCW	
C6	0180-0129	C:FXD ELECT 975UF -10+50% 40VDCW	
C7	0180-0107	C:FXD ELECT 20UF -10/+100% 200VDCW	
C8	0180-0107	C:FXD ELECT 20UF -10/+100% 200VDCW	
C9	0180-0129	C:FXD ELECT 975UF -10+50% 40VDCW	
C10	0180-0130	C:FXD ELECT 1500UF -10+50% 15VDCW	
C11	0150-0093	C:FXD CER 0.01UF +80-20 100VDCW	
C12	0150-0093	C:FXD CER 0.01UF +80-20 100VDCW	
C13	0150-0121	C:FXD,CER,0.1UF 50 VDCW	
C14	0150-0012	C:FXD CER 0.01UF 20% 1000VDCW	
C15	0160-0127	C:FXD CER 1UF 20% 25VDCW	
C16 & C17	0160-0174	C:FXD CER 0.47 UF +80-20% 25VDCW	
CR1	1902-0039	SEMICON DEVICE:DIODE 1N1597A	
DS1	1450-0049	INDICATOR:GLOW-LAMP NEON	
F1	2110-0006	FUSE:CARTRIDGE 2AMP 125V SLOW BLOW (115V OPERATION ONLY)	
F1	2110-0007	FUSE:CARTRIDGE 1 AMP 250V SLOW BLOW (230V OPERATION ONLY)	
J1	1250-0118	CONNECTOR:BNC	
J2	1250-0118	CONNECTOR:BNC	
J3	1250-0118	CONNECTOR:BNC	
J4	1250-0118	CONNECTOR:BNC	
J5	1250-0118	CONNECTOR:BNC	
J6	1251-0101	CONNECTOR:FEMALE 50-CONTACT	
J7	1250-0118	CONNECTOR:BNC	
J8	1250-0118	CONNECTOR:BNC	
J9 THRU			
J10		NOT ASSIGNED	
J11	1251-0087	CONNECTOR:FEMALE 50-PIN MINAT	
L1	9140-0136	COIL:FXD RF 22 UH	
L2	9140-0136	COIL:FXD RF 22 UH	
L3	9110-0051	INDUCTOR:A.F.	
L4	9110-0051	INDUCTOR:A.F.	
L5	9140-0137	COIL:FXD RF 1000UH	
MP1	0370-0077	KNOB:1/4 BAR WITH ARROW	
MP2	0370-0077	KNOB:1/4 BAR WITH ARROW	
MP3	0370-0077	KNOB:1/4 BAR WITH ARROW	
MP4	0370-0077	KNOB:1/4 BAR WITH ARROW	
MP5	0370-0077	KNOB:1/4 BAR WITH ARROW	
MP6	0370-0084	KNOB:ROUND	
MP7	0510-0123	RETAINER:PUSH-ON TYPE FASTENER	
MP8	1200-0043	INSULATOR:TRANSISTOR ANODIZED ALUMINUM	
MP9	1200-0043	INSULATOR:TRANSISTOR ANODIZED ALUMINUM	

See list of abbreviations in introduction to this section

Table 4-1. Reference Designation Index (Cont'd)

Reference Designation	℗ Stock No.	Description #	Note
MP10	1200-0043	INSULATOR:TRANSISTOR ANODIZED ALUMINUM	
MP11	1200-0076	INSULATOR:TRANISTOR	
MP12	1200-0081	BUSHING:INSULATOR NYLON	
MP13	1200-0081	BUSHING:INSULATOR NYLON	
MP14	1200-0081	BUSHING:INSULATOR NYLON	
MP15	1200-0081	BUSHING:INSULATOR NYLON	
MP16	1200-0081	BUSHING:INSULATOR NYLON	
MP17	1200-0081	BUSHING:INSULATOR NYLON	
MP18	1200-0087	CLAMP:TRANSISTOR	
MP19	1200-0092	BUSHING:TRANSISTOR	
MP20	1200-0092	BUSHING:TRANSISTOR	
MP21	1520-0001	PLATE:MOUNTING ELECTROLYTIC CAPACITOR	
MP22	1520-0001	PLATE:MOUNTING ELECTROLYTIC CAPACITOR	
MP23	1520-0001	PLATE:MOUNTING ELECTROLYTIC CAPACITOR	
MP24	1520-0001	PLATE:MOUNTING ELECTROLYTIC CAPACITOR	
MP25	1520-0003	MOUNTING PLATE:CAPACITOR	
MP26	1520-0003	MOUNTING PLATE:CAPACITOR	
MP27	2190-0046	WASHER:SPLIT LOCK	
MP28	2190-0046	WASHER:SPLIT LOCK	
MP29	2190-0046	WASHER:SPLIT LOCK	
MP30	2190-0046	WASHER:SPLIT LOCK	
MP31	2190-0046	WASHER:SPLIT LOCK	
MP32	2190-0046	WASHER:SPLIT LOCK	
MP33	2390-0015	SCREW:MACHINE	
MP34	3160-0060	FAN:IMPELLER AXIAL	
MP35	5212L-83A	SUPPORT:READOUT	
MP36	5212L-83B	READOUT:UNITS	
MP37	05243-6036	PANEL:PLUG-IN	
MP38	5243A-6A	GUARD:FAN	
MP39		NOT ASSIGNED	
MP40	5243A-12C	BRACKET:SWITCH	
MP41	5243A-12C	BRACKET:SWITCH	
MP42	5243A-12C	BRACKET:SWITCH	
MP43	5243A-12E	SUPPORT:CAPACITOR	
MP44	5243A-12F	BRACKET:CRYSTAL OVEN	
MP45	5243A-20A	HOUSING:FAN	
MP46	5243A-47C	SUPPORT:PANEL	
MP47	5243A-55A	SHIELD:OSCILLATOR	
MP48	5040-0170	SUPPORT: PRINTED CIRCUIT BOARD	
MP49	5243L-12B	BRACKET:BOARD	
MP50	5243L-12C	BRACKET:BOARD GUIDE	
MP51	5243L-17A	BUSHING:LATCH	
MP52		NOT ASSIGNED	
MP53	05243-2018	HOUSING:PLUG-IN	
MP54	05243-2014	SHAFT:LATCH	
MP55		NOT ASSIGNED	
MP56	5243L-41A	PLATE:CASTING	
MP57	5243L-55B	SHIELD:INPUT	
MP58	05243-2015	KNOB	
MP59		NOT ASSIGNED	
MP60	5243L-83A	HOLDER:DECIMAL	

See list of abbreviations in introduction to this section

Table 4-1. Reference Designation Index (Cont'd)

Reference Designation	Stock No.	Description #	Note
MP61	5243L-83B	COVER:READOUT	
MP62	5243L-83C	INSERT:UNITS READOUT	
MP63 THRU			
MP64		NOT ASSIGNED	
MP65	5243L-91A	SPRING:LATCH	
MP66		NOT ASSIGNED	
MP67	5243L-99A	WINDOW	
MP68	5243L-107A	BAR:READOUT	
MP69	05243-2013	PAWL	
MP70		NOT ASSIGNED	
MP71	5243L-110A	GUIDE:BOARD FRONT	
MP72	5243L-110B	GUIDE:BOARD REAR	
MP73	5243L-110C	GUIDE:BOARD DUAL	
MP74	05245-2005	PANEL:FRONT	
MP75	05245-2007	PANEL:REAR	
MP76	5245L-55A	SHIELD:AMPLIFIER	
MP77	05243-0008	RETAINER:FRONT PANEL	
MP78	05243-0007	RETAINER:LATCH	
Q1	1850-0090	TRANSISTOR:GERMANIUM 2N1183B PNP	
Q2	1850-0038	TRANSISTOR:PNP GERMANIUM	
Q3	1850-0038	TRANSISTOR:PNP GERMANIUM	
Q4	1850-0038	TRANSISTOR:PNP GERMANIUM	
R1	0683-2235	R:FXD COMP 22K OHM 5% 1/4W	
R2	0683-2245	R:FXD COMP 220K OHM 5% 1/4W	
R3	0683-8235	R:FXD COMP 82K OHM 5% 1/4W	
R4	0683-2735	R:FXD COMP 27K OHM 5% 1/4W	
R5	2100-0318	R:VAR 250K OHM 20% 1/4W/SPST SW	
R6	0686-1045	R:FXD COMP 100K OHM 5% 1/2W	
R7	0686-3325	R:FXD COMP 3300 OHM 5% 1/2W	
S1	3101-0037	SWITCH:TOG SPST 3 AMP 125V	
S2	3101-0014	SWITCH:PUSH SPDT NE	
S3		NSR PART OF R5	
S4	3101-0034	SWITCH:SLIDE 4 PDT 0.5 AMP 125 VDC	
T1	9100-0166	TRANSFORMER:POWER	
T2	9100-0164	TRANSFORMER:POWER	
W1	8120-0078	CABLE:POWER SVT-18-3 7.5FT.	
XA6	1251-0159	CONNECTOR:2X15 CONTACT	
XA7	1251-0135	CONNECTOR-PRINTED CIRCUIT 15 CONTACTS	
XA8 THRU			
XA9		NOT ASSIGNED	
XA10	1251-0135	CONNECTOR-PRINTED CIRCUIT 15 CONTACTS	
XA11	1251-0135	CONNECTOR-PRINTED CIRCUIT 15 CONTACTS	
XA12	1251-0135	CONNECTOR-PRINTED CIRCUIT 15 CONTACTS	
XA13	1251-0135	CONNECTOR-PRINTED CIRCUIT 15 CONTACTS	
XA14	1251-0135	CONNECTOR-PRINTED CIRCUIT 15 CONTACTS	
XA15	1251-0135	CONNECTOR-PRINTED CIRCUIT 15 CONTACTS	
XA16	1251-0135	CONNECTOR-PRINTED CIRCUIT 15 CONTACTS	
XA17	1251-0135	CONNECTOR-PRINTED CIRCUIT 15 CONTACTS	

See list of abbreviations in introduction to this section

Table 4-1. Reference Designation Index (Cont'd)

Reference Designation	Stock No.	Description #	Note
XA18	1251-0135	CONNECTOR-PRINTED CIRCUIT 15 CONTACTS	
XA19 THRU			
XA21		NOT ASSIGNED	
XA22	1251-0135	CONNECTOR-PRINTED CIRCUIT 15 CONTACTS	
XA23	1251-0135	CONNECTOR-PRINTED CIRCUIT 15 CONTACTS	
XA24 THRU			
XA25		NOT ASSIGNED	
XA26	1251-0135	CONNECTOR-PRINTED CIRCUIT 15 CONTACTS AND	
XA26	1251-0158	CONNECTOR:6-CONTACT	
XA27	1251-0135	CONNECTOR-PRINTED CIRCUIT 15 CONTACTS	
XA28	1251-0135	CONNECTOR-PRINTED CIRCUIT 15 CONTACTS	
XA29	1251-0135	CONNECTOR-PRINTED CIRCUIT 15 CONTACTS	
XA30	1251-0135	CONNECTOR-PRINTED CIRCUIT 15 CONTACTS	
XA31	1251-0135	CONNECTOR-PRINTED CIRCUIT 15 CONTACTS	
XA32	1251-0135	CONNECTOR-PRINTED CIRCUIT 15 CONTACTS	
XA33	1251-0135	CONNECTOR-PRINTED CIRCUIT 15 CONTACTS	
XA34	1251-0135	CONNECTOR-PRINTED CIRCUIT 15 CONTACTS	
XF1	1400-0084	FUSEHOLDER:EXTRACTOR POST TYPE	
XW1	1251-0148	CONNECTOR:POWER 3-PIN MALE	
		MISCELLANEOUS	
	5243A-44A	KIT:5-1/4" RACK MOUNT	
	8500-0059	SILICONE GREASE(FOR TRANSISTOR HEAT-SINK)	
	3150-0037	AIR FILTER ASSY	

See list of abbreviations in introduction to this section

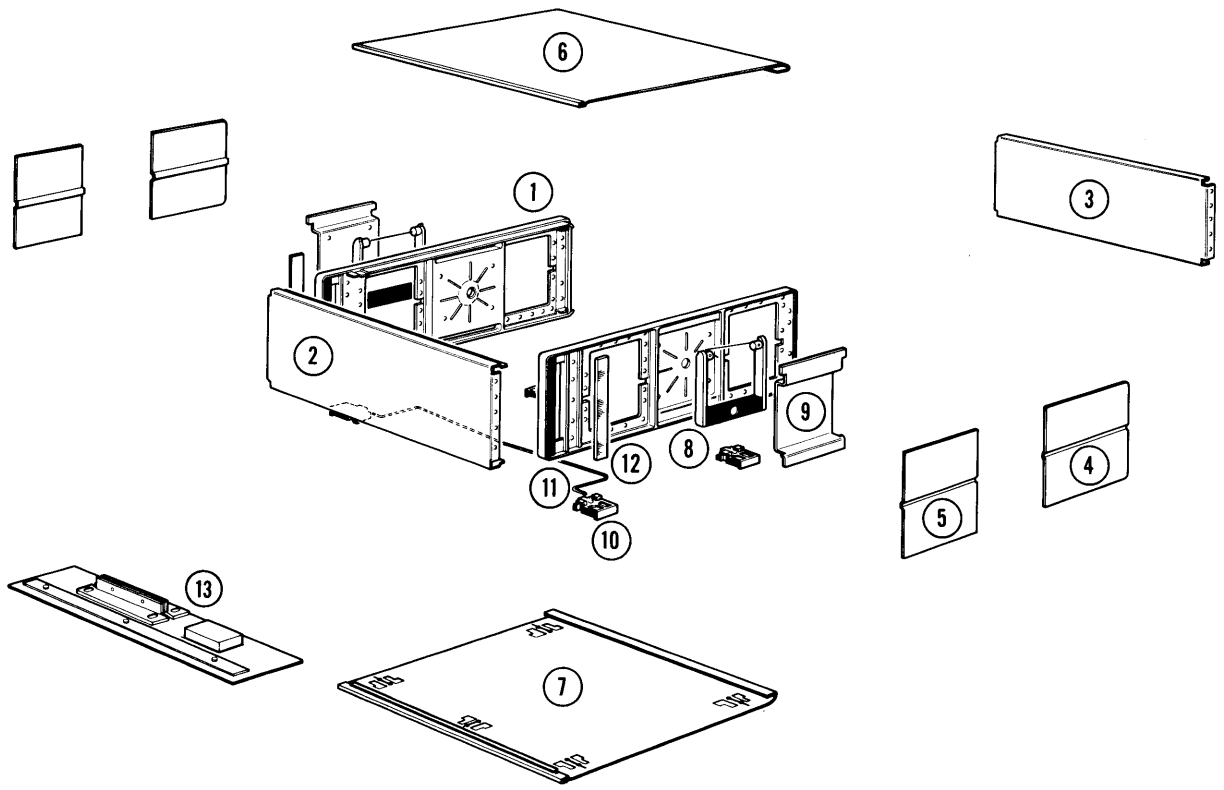

Item No.	Description	Part Number
1	Frame Assembly	5060-0732
2	Front Panel	05245-2017
3	Rear Panel	05245-0017
4	Cover: Rear Side, perforated	5000-0738
5	Cover: Front Side, perforated	5000-0739
6	Cover Assembly: Top	5243A-1C
7	Cover Assembly: Bottom	5243A-1B
8	Handle Assembly: Side	5060-0763
9	Handle Assembly: Retainer	5060-0766
10	Foot Assembly	5060-0767
11	Stand: Tilt	1490-0030
12	Plate: Fluted	5000-0051
13	Kit: Rack Mounting	5243A-44A

Figure 4-1. Modular Cabinet Parts

Table 4-2. Replaceable Parts

Stock No.	Description #	Mfr.	Mfr. Part No.	TQ
0121-0013	C:VAR AIR 6-100.5PF	80486	OBS#	1
0130-0001	C:VAR CER 7-45PF 500VDCW	72982	50300D2P0	1
0130-0003	C:VAR CER 1.5-7 PF 500VDCW	72982	503-000C0P0-10R	1
0140-0145	C:FXD MICA 22 PF 5% 500 VDCW	04062	DM15C220J	4
0140-0149	C:FXD MICA 470 PF 5% 300 VDCW	04062	DM15F471J	5
0140-0151	C:FXD MICA 820PF 2% 300VDCW	04062	DM15F821G	1
0140-0152	C:FXD MICA 1000 PF 5% 300VDCW	28480	0140-0152	1
0140-0156	C:FXD MICA 1500 PF 2% 300 VDCW	04062	DM19F152G 300V	1
0140-0159	C:FXD MICA 3000PF 300VDCW	04062	DM19F302G	3
0140-0162	C:FXD MICA 4700 PF 10% 300 VDCW	04062	DM20F472K	1
0140-0166	C:FXD MICA 0.017 UF 2% 300 VDCW	04062	DM30F173G	1
0140-0169	C:FXD MICA 100 PF 5% 500VDCW	00853	M-23 CB11RD101J	1
0140-0176	C:FXD MICA 100 PF 2% 300 VDCW	04062	RDM15F101G3C	1
0140-0190	C:FXD MICA 39 PF 5% 300 VDCW	04062	RDM15E390J3C	5
0140-0191	C:FXD MICA 56 PF 5% 300 VDCW	04062	RDM15E560J3C	10
0140-0192	C:FXD MICA 68PF 5% 300VDCW	04062	DM15E680J	5
0140-0193	C:FXD MICA 82PF 5% 300VDCW	04062	RDM15E 820J	6
0140-0194	C:FXD MICA 110 PF 5% 300 VDCW	04062	DM15F111J 300V	50
0140-0195	C:FXD MICA 130 PF 5% 300 VDCW	04062	DM15F131J 300V	37
0140-0196	C:FXD MICA 150 PF 5% 300 VDCW	04062	DM15F151J 300V	21
0140-0198	C:FXD MICA 200PF 5% 300VDCW	04062	DM15F201J 300V	27
0140-0199	C:FXD MICA 240PF 5% 300VDCW	04062	DM15F241J 300V	13
0140-0200	C:FXD MICA 390PF 5% 300VDCW	04062	DM15F391J 300V	14
0140-0201	C:FXD MICA 12PF 5% 500VDCW	04062	DM15C120J	2
0140-0202	C:FXD MICA 15 PF 5% 500VDCW	04062	DM15C150J	4
0140-0203	C:FXD MICA 30PF 5% 500VDCW	04062	DM15E300J 500V	4
0140-0204	C:FXD MICA 47PF 5% NPO 500VDCW	04062	RDM15E470J5C	13
0140-0205	C:FXD MICA 62 PF 5% 300VDCW	04062	DM15E620J	1
0140-0208	C:FXD MICA 680PF 5% 300VDCW	04062	DM15F681J	3
0140-0209	C:FXD MICA 5 PF 10% 500VDCW	28480	0140-0209	1
0140-0210	C:FXD MICA 270PF 5% 300VDCW	04062	DM15F271J 300V	3
0140-0214	C:FXD MICA 60PF 5% 300VDCW	04062	DM15E600J 300V	2
0140-0217	C:FXD MICA 140 PF 2% 300VDCW	04062	DM15F141G-300V	5
0150-0012	C:FXD CER 0.01UF 20% 1000VDCW	56289	H 1038	2
0150-0042	C:FXD TI 4.7 PF 5% 500VDCW	78488	TYPE GA	2
0150-0047	C:FXD TI 6.8 PF 10% 500 VDCW	78488	TYPE GA	2
0150-0050	C:FXD CER 100 PF 600 VDCW	000RR	TYPE E	3
0150-0061	C:FXD CER 20 PF 10% 100VDCW	56289	53C47	2
0150-0069	C:FXD CER 0.001 UF +100-20% 500VDCW	72982	801-010X5G0102Z	1
0150-0073	C:FXD CER 100 PF 10% 500VDCW	56289	40C200A2	2
0150-0093	C:FXD CER 0.01UF +80-20 I00VDCW	91418	TA	38
0150-0115	C:FXD CER 27 PF 10% 500VDCW	71590	CC20TCN27	1
0150-0119	C:FXD CER 2X(.01UF) 20% 250VDCW	56289	41C159A	1
0150-0121	C:FXD CER 0.1UF +80%-20% 50VDCW	56289	5C50A	10
0150-0122	C:FXD CER 2000PF 20% 500VDCW	72982	801-000-Y5S-202M	2
0160-0126	C:FXD PORC 160PF 2% 500VDCW	95275	VY13C161G	1
0160-0127	C:FXD CER 1UF 20% 25VDCW	56289	5C13	10
0160-0134	C:FXD MICA 220PF 5% 300VDCW	14655	CD15F221J(300V)	10
0160-0155	C:FXD MY 3300 PF 10%	28480	0160-0155	1
0160-0157	C:FXD MY 4700 PF 10%	28480	0160 0157	1

See list of abbreviations in introduction to this section

Table 4-2. Replaceable Parts (Cont'd)

Stock No.	Description #	Mfr.	Mfr. Part No.	TQ
0160-0161	C:FXD MY 0.01 UF 10% 200VDCW	28480	0160-0161	1
0160-0163	C:FXD MY 3300 PF 10%	28480	0160 0163	1
0160-0174	C:FXD CER 0.47 UF +80-20% 25VDCW	56289	5C11B7	2
0160-0181	C:FXD MICA 30PF 5% 300VDCW	14655	RDM15E470J3S	1
0160-0194	C:FXD MY 0.015UF 10%	28480	0160-0194	8
0160-0205	C:FXD MICA 10 PF 5%	28480	0160-0205	2
0160-0314	C:FXD MY 0.01 UF 5% 400VDCW	84411	TYPE 663UW	2
0160-0369	C:FXD MICA 17 PF 5%	28480	0160-0369	5
0160-0370	C:FXD MICA 20 PF 5%	28480	0160-0370	1
0160-2248	C:FXD CER 4.3 PF 500VDCW	72982	301-NPO 4.3 PF	1
0160-2260	C:FXD CER 13 PF 5% 500VDCW	72982	301-NPO 13 PF	1
0160-2262	C:FXD CER 16 PF 5% 500VDCW	72982	301-NPO 16 PF	1
0160-2306	C:FXD MICA 27 PF 5%	28480	0160-2306	2
0160-2550	C:FXD CER 1.0 PF 500VDCW	72982	301-000-C0K0-109B	1
0160-2563	C:FXD CER 2000 PF 20% 500VDCW	72982	801-012-Y5S-202M	4
0170-0024	C:FXD MV 0.022 UF 20% 200VDCW	56289	192P22302A	1
0170-0040	C:FXD MY .047 UF 10% 200VDCW	28480	0170-0040	5
0170-0055	C:FXD MY 0.1UF 20% 200VDCW	56289	192P10402	1
0170-0073	C:FXD MY 1UF 10% 600VDCW	09134	1041	1
0170-0084	C:FXD MY 0.068UF 20% 50VDCW	84411	601PE STYLE 3	4
0170-0094	C:FXD MY 0.047UF 20% 50VDCW	84411	TYPE 602	2
0180-0047	C:FXD ELECT 500UF 75VDCW	56289	D32443	1
0180-0049	C:FXD ELECT 20UF 50VDCW	56289	30D198A1	1
0180-0058	C:FXD ELECT 50UF -10%+100% 25VDCW	56289	TYPE 30D186A1	1
0180-0098	C:FXD ELECT 100UF 20% 20VDCW	56289	150D107X0020S2	2
0180-0100	C:FXD ELECT TA 4.7UF 10% 35VDCW	56289	150D475X9035B2	9
0180-0107	C:FXD ELECT 20UF -10/+100% 200VDCW	56289	90803	2
0180-0129	C:FXD ELECT 975UF -10+50% 40VDCW	56289	S37006	2
0180-0130	C:FXD ELECT 1500UF -10+50% 15VDCW	00853	PLI 505 1007 02	1
0180-0137	C:FXD ELECT TA 100 UF 20% 10VDCW	56289	150D107X0010R2	1
0370-0077	KNOB:1/4 BAR WITH ARROW	28480	0370-0077	5
0370-0084	KNOB:ROUND	28480	0370-0084	1
0510-0123	RETAINER:PUSH-ON TYPE FASTENER	78553	C12008-014-4	1
0683-0475	R:FXD COMP 4.7 OHMS 5% 1/4W	01121	CB 47G5	1
0683-1015	R:FXD COMP 100 OHM 5% 1/4W	01121	CB 1015	15
0683-1025	R:FXD COMP 1000 OHMS 5% 1/4W	01121	CB-1025	24
0683-1035	R:FXD COMP 10K OHMS 5% 1/4W	01121	CB 1035	98
0683-1045	R:FXD COMP 100K OHM 5% 1/4W	01121	CB 1045	34
0683-1055	R:FXD COMP 1 MEGOHM 5% 1/4W	01121	CB 1055	13
0683-1115	R:FXD COMP 110 OHM 5% 1/4W	01121	CB 1115	8
0683-1125	R:FXD COMP 1100 OHM 5% 1/4W	01121	CB 1125	2
0683-1135	R:FXD COMP 11K OHM 5% 1/4W	01121	CB 1135	1
0683-1225	R:FXD COMP 1200 OHMS 5% 1/4W	01121	CB 1225	2
0683-1235	R:FXD COMP 12K OHM 5% 1/4W	01121	CB 1235	7
0683-1245	R:FXD COMP 120K OHM 5% 1/4W	01121	CB 1245	8
0683-1305	R:FXD COMP 13 OHMS 5% 1/4W	01121	CB 1305	1
0683-1325	R:FXD COMP 1300 OHMS 5% 1/4W	01121	CB 1325	4
0683-1515	R:FXD COMP 150 OHM 5% 1/4W	01121	CB 1515	1
0683-1525	R:FXD COMP 150 OHMS 5% 1/4W	01121	CB 1525	3
0683-1535	R:FXD COMP 15K OHMS 5% 1/4W	01121	CB 1535	8
0683-1545	R:FXD COMP 150K OHM 5% 1/4W	01121	CB 1545	5

See list of abbreviations in introduction to this section

Table 4-2. Replaceable Parts (Cont'd)

Stock No.	Description #	Mfr.	Mfr. Part No.	TQ
0683-1615	R:FXD COMP 160 OHM 5% 1/4W	01121	CB 1615	2
0683-1625	R:FXD COMP 1600 OHMS 5% 1/4W	01121	CB 1625	1
0683-1635	R:FXD COMP 16K OHM 5% 1/4W	01121	CB 1635	17
0683-1815	R:FXD COMP 180 OHM 5% 1/4W	01121	CB 1815	24
0683-1825	R:FXD COMP 1800 OHMS 5% 1/4W	01121	CB 1825	9
0683-1835	R:FXD COMP 18K OHM 5% 1/4W	01121	CB 1835	9
0683-1845	R:FXD COMP 180K OHMS 5% 1/4W	01121	CB 1845	5
0683-2015	R:FXD COMP 200 OHMS 5% 1/4W	01121	CB 2015	27
0683-2025	R:FXD COMP 2000 OHM 5% 1/4W	01121	CB 2025	20
0683-2205	R:FXD COMP 22 OHM 5% 1/4W	01121	CB 2205	2
0683-2215	R:FXD COMP 220 OHMS 5% 1/4W	01121	CB 2215	2
0683-2225	R:FXD COMP 2.2K OHM 5% 1/4W	01121	GB 2225	8
0683-2235	R:FXD COMP 22K OHM 5% 1/4W	01121	CB 2235	12
0683-2245	R:FXD COMP 220K OHM 5% 1/4W	01121	CB 2245	2
0683-2415	R:FXD COMP 240 OHMS 5% 1/4W	01121	CB 2415	4
0683-2425	R:FXD COMP 2400 OHMS 5% 1/4W	01121	CB 2425	4
0683-2435	R:FXD COMP 24K OHM 5% 1/4W	01121	CB 2435	1
0683-2715	R:FXD COMP 270 OHMS 5% 1/4W	01121	CB 2715	1
0683-2725	R:FXD COMP 2700 OHMS 5% 1/4W	01121	CB 2725	14
0683-2735	R:FXD COMP 27K OHM 5% 1/4W	01121	CB 2735	6
0683-3025	R:FXD COMP 3000 OHM 5% 1/4W	01121	CB 3025	17
0683-3305	R:FXD COMP 33 OHMS 5% 1/4W	01121	CB 3305	1
0683-3315	R:FXD COMP 330 OHMS 5% 1/4W	01121	CB 3315	8
0683-3325	R:FXD COMP 3300 OHM 5% 1/4W	01121	CB 3325	8
0683-3615	R:FXD COMP 360 OHM 5% 1/4W	01121	CB 3615	1
0683-3625	R:FXD COMP 3600 OHM 5% 1/4W	01121	CB 3625	4
0683-3915	R:FXD COMP 390 OHMS 5% 1/4W	01121	CB 3915	13
0683-3925	R:FXD COMP 3900 OHMS 5% 1/4W	01121	CB 3925	105
0683-3935	R:FXD COMP 39K OHM 5% 1/4W	01121	CB 3935	2
0683-3945	R:FXD COMP 390K OHMS 5% 1/4W	01121	CB 3945	32
0683-4315	R:FXD COMP 430 OHMS 5% 1/4W	01121	CB 4315	4
0683-4325	R:FXD COMP 4300 OHM 5% 1/4W	01121	CB 4325	2
0683-4335	R:FXD COMP 43K OHM 5% 1/4W	01121	CB 4335	41
0683-4705	R:FXD COMP 47 OHM 5% 1/4W	01121	CB 4705	1
0683-4715	R:FXD 470 OHMS 5% 1/4W	01121	CB-4715	10
0683-4725	R:FXD COMP 4700 OHM 5% 1/4W	01121	CB 4725	22
0683-4735	R:FXD COMP 47K OHMS 5% 1/4W	01121	CB 4735	124
0683-5105	R:FXD COMP 51 OHM 5% 1/4W	01121	CB 5105	3
0683-5115	R:FXD COMP 510 OHMS 5% 1/4W	01121	CB 5115	6
0683-5125	R:FXD COMP 5100 OHM 5% 1/4W	01121	CB 5125	7
0683-5135	R:FXD COMP 51K OHMS 5% 1/4W	01121	CB 5135	10
0683-5615	R:FXD COMP 560 OHMS 5% 1/4W	01121	CB 5615	1
0683-5635	R:FXD COMP 56K OHMS 5% 1/4W	01121	CB 5635	66
0683-6205	R:FXD COMP 62 OHM 5% 1/4W	01121	CB 6205	4
0683-6215	R:FXD COMP 620 OHM 5% 1/4W	01121	CB 6215	1
0683-6225	R:FXD COMP 6200 OHMS 5% 1/4W	01121	CB 6225	4
0683-6235	R:FXD COMP 62K OHM 5% 1/4W	01121	CB 6235	2
0683-6805	R:FXD COMP 68 OHMS 5% 1/4W	01121	CB 6805	4
0683-6815	R:FXD COMP 680 OHMS 5% 1/4W	01121	CB 6815	3
0683-6825	R:FXD COMP 6800 OHMS 5% 1/4W	01121	CB 6825	49

See list of abbreviations in introduction to this section

Table 4-2. Replaceable Parts (Cont'd)

Stock No.	Description #	Mfr.	Mfr. Part No.	TQ
0683-6835	R:FXD COMP 68K OHM 5% 1/4W	01121	CB 6835	18
0683-7515	R:FXD COMP 750 OHMS 5% 1/4W	01121	CB 7515	4
0683-7525	R:FXD COMP 7500 OHMS 5% 1/4W	01121	CB 7525	8
0683-7535	R:FXD COMP 75K OHM 5% 1/4W	01121	CB 7535	1
0683-8215	R:FXD COMP 820 OHMS 5% 1/4W	01121	CB 8215	3
0683-8225	R:FXD COMP 8200 OHMS 5% 1/4W	01121	CB 8225	22
0683-8235	R:FXD COMP 82K OHM 5% 1/4W	01121	EB 8235	1
0683-9105	R:FXD COMP 910 OHM 5% 1/4W	01121	CB 9105	4
0683-9115	R:FXD COMP 910 OHM 5% 1/4W	01121	CB 9115	1
0683-9125	R:FXD COMP 9100 OHM 5% 1/4W	01121	CB 9125	2
0683-9135	R:FXD COMP 91K OHM 5% 1/4W	01121	CB 9135	1
0686-1025	R:FXD COMP 1000 OHM 5% 1/2W	01121	EB 1025	3
0686-1035	R:FXD COMP 10K OHM 5% 1/2W	01121	EB 1035	6
0686-1045	R:FXD COMP 100K OHM 5% 1/2W	01121	EB 1045	1
0686-1055	R:FXD COMP 10 MEGOHM 5% 1/2W	01121	EB 1055	1
0686-1225	R:FXD COMP 1200 OHM 5% 1/2W	01121	EB 1225	2
0686-1325	R:FXD COMP 1.3K OHM 5% 1/2W	01121	EB 1325	2
0686-1525	R:FXD COMP 1500 OHM 5% 1/2W	01121	EB 1525	1
0686-1825	R:FXD COMP 1800 OHM 5% 1/2W	01121	EB 1825	1
0686-2035	R:FXD COMP 20K OHM 5% 1/2W	01121	EB 2035	2
0686-2225	R:FXD COMP 2200 OHM 5% 1/2W	01121	EB 2225	6
0686-2235	R:FXD COMP 22K OHM 5% 1/2W	01121	EB 2235	1
0686-2725	R:FXD COMP 2700 OHM 5% 1/2W	01121	EB 2725	1
0686-2735	R:FXD COMP 27K OHM 5% 1/2W	01121	EB 2735	2
0686-3025	R:FXD COMP 3000 OHM 5% 1/2W	01121	EB 3025	1
0686-3325	R:FXD COMP 3300 OHM 5% 1/2W	01121	EB 3325	1
0686-3625	R:FXD COMP 3600 OHM 5% 1/2W	01121	EB 3625	2
0686-4715	R:FXD COMP 470 OHMS 5% 1/2W	01121	EB 4715	3
0686-4725	R:FXD COMP 4700 OHM 5% 1/2W	01121	EB 4725	2
0686-4735	R:FXD COMP 47K OHM 5% 1/2W	01121	EB 4735	17
0686-6215	R:FXD COMP 620 OHM 5% 1/2W	01121	EB 6215	1
0686-7525	R:FXD COMP 7500 OHM 5% 1/2W	01121	EB 7525	42
0686-8215	R:FXD COMP 820 OHM 5% 1/2W	01121	EB 8215	3
0686-9115	R:FXD COMP 910 OHMS 5% 1/2W	01121	EB 9115	1
0686-9125	R:FXD COMP 9100 OHM 5% 1/2W	01121	EB 9125	1
0689-1525	R:FXD COMP 1500 OHM 5% 1W	01121	GB 1525	1
0689 2035	R:FXD COMP 20K OHM 5% 1W	01121	GB 2035	1
0699-0013	R:FXD COMP 6.8 OHM 10% 1W	01121	GB 68G1	1
0727-0081	R:FXD DEPC 600 OHM 1% 1/2W	19701	DC 1/2 AR5	1
0727-0105	R:FXD C-FLM 1200 OHM 1% 1/2W	28480	0727-0105	1

See list of abbreviations in introduction to this section

Table 4-2. Replaceable Parts (Cont'd)

Stock No.	Description #	Mfr.	Mfr. Part No.	TQ	
0727-0387	R:FXD DEPC 442 OHM 1% 1/2W	19701	DC 1/2A R5	1	
0757-0344	R:FXD MET FLM 1 MEGOHM 1% 1/4W	28480	0757-0344	1	
0757-0350	R:FXD MET FLM 909K OHM 1% 1/4W	28480	0757-0350	1	
0757-0368	R:FXD MET FLM 34 OHM 1% 1/8W	28480	0757-0368	2	
0757-0898	R:FXD MET FLM 82 OHM 2% 1/8W	28480	0757-0898	2	
0757-0900	R:FXD MET FLM 100 OHM 2% 1/8W	28480	0757-0900	2	
0757-0902	R:FXD MET FLM 120 OHM 2% 1/8W	28480	0757-0902	2	
0757-0904	R:FXD MET FLM 150 OHM 2% 1/8W	28480	0757-0904	2	
0757-0909	R:FXD MET FLM 240 OHM 2% 1/8W	28480	0757-0909	4	
0757-0914	R:FXD MET FLM 390 OHM 2% 1/8W	28480	0757-0914	3	
0757-0916	R:FXD MET FLM 470 OHM 2% 1/8W	28480	0757-0916	4	
0757-0920	R:FXD MET FLM 680 OHM 2% 1/8W	28480	0757-0920	2	
0757-0924	R:FXD MET FLM 1K OHM 2% 1/8W	28480	0757-0924	2	
0757-0930	R:FXD MET FLM 1.8K OHM 2% 1/8W	28480	0757-0930	4	
0757-0932	R:FXD MET FLM 2.2K OHM 2% 1/8W	28480	0757-0932	4	
0757-0936	R:FXD MET FLM 3.3K OHM 2% 1/8W	28480	0757-0936	4	
0757-0937	R:FXD MET FLM 3.6K OHM 2% 1/8W	28480	0757-0937	1	
0757-0940	R:FXD MET FLM 4.7K OHM 2% 1/8W	28480	0757-0940	2	
0757-0948	R:FXD MET FLM 10K OHM 2% 1/8W	28480	0757-0948	5	
0757-0950	R:FXD MET FLM 12K OHM 2% 1/8W	28480	0757-0950	4	
0757-0952	R:FXD MET FLM 15K OHM 2% 1/8W	28480	0757-0952	4	
0757-0972	R:FXD MET FLM 100K OHM 2% 1/8W	28480	0757-0972	4	
0758-0004	R:FXD MET FLM 2700 OHM 5% 1/2W	28480	0758-0004	14	
0758-0014	R:FXD MET OX 180 OHM 5%	28480	0758-0014	1	
0758-0015	R:FXD MET FLM 220 OHMS 5% 1/2W	07115	C 20	7	
0758-0024	R:FXD MET FLM 100 OHM 5% 1/2W	28480	0758-0024	1	
0758-0028	R:FXD MET FLM 270 OHMS 5% 1/2W	07115	C 20	1	
0758-0043	R:FXD MET FLM 1800 OHM 5% 1/2W	28480	0758-0043	4	
0758-0044	R:FXD MET OX 2200 OHM 5% 1/2W	28480	0758-0044	2	
0758-0054	R:FXD MET FLM 330 OHMS 5% 1/2W	07115	C 20	1	
0761-0010	R:FXD MET OX 1800 OHM 5% 1W	28480	0761-0010	4	
0761-0020	R:FXD MET FLM 91 OHM 5% 1W	07115	C32	1	
0767-0001	R:FXD MET FLM 400 OHMS 5% 3W	07115	LPI 3	1	
1200-0043	INSULATOR:TRANSISTOR ANODIZED ALUMINUM	76530	294457	3	
1200-0076	INSULATOR:TRANISTOR	02735	OBS#	1	
1200-0081	BUSHING:INSULATOR NYLON	26365	974SPECIAL	6	
1200-0087	CLAMP:TRANSISTOR	02735	DF-13-A	1	
1200-0092	BUSHING:TRANSISTOR	02735	OBS#	2	
1250-0118	CONNECTOR:BNC	91737	8427	7	
1251-0087	CONNECTOR:FEMALE 50-PIN MINAT	02660	57-4057-40500(375)	1	
1251-0101	CONNECTOR:FEMALE 50-CONTACT	02660	57-20500	1	
1251-0135	CONNECTOR-PRINTED CIRCUIT 15 CONTACTS	95354	SD-615UR	21	
1251-0148	CONNECTOR:POWER 3-PIN MALE	60427	H-1061 1G-3L	1	
1251-0158	CONNECTOR:6-CONTACT	95354	CD-606S	1	
1251-0159	CONNECTOR:2X15 CONTACT	95354	FD-630S	1	
1400-0084	FUSEHOLDER:EXTRACTOR POST TYPE	75915	342014	1	
1450-0049	INDICATOR:GLOW-LAMP NEON	28480	1450-0049	1	
1520-0001	PLATE:MOUNTING ELECTROLYTIC CAPACITOR	28480	1520-0001	4	
1520-0003	MOUNTING PLATE:CAPACITOR	37942	TYPE BP2	2	
1850-0038	TRANSISTOR:PNP GERMANIUM	86684	1850-0038	3	

See list of abbreviations in introduction to this section

Table 4-2. Replaceable Parts (Cont'd)

℗ Stock No.	Description #	Mfr.	Mfr. Part No.	TQ	
1850-0040	TRANSISTOR:GERMANIUM 2N383 PNP	94154	2N383	3	
1850-0048	TRANSISTOR:GERMANIUM 2N650 PNP	04713	2N650	1	
1850-0054	TRANSISTOR:GERMANIUM 2N652A PNP	04713	2N652A	2	
1850-0062	TRANSISTOR:GERMANIUM	28480	1850-0062	102	
1850-0090	TRANSISTOR:GERMANIUM 2N1183B PNP	86684	2N1183B	1	
1850-0091	TRANSISTOR:GERMANIUM 2N2048 PNP	87216	2N2048	3	
1850-0092	TRANSISTOR:GERMANIUM 2N2043A PNP	04713	2N2043	1	
1850-0101	TRANSISTOR:SPL2N582	28480	1850-0101	1	
1850-0102	TRANSISTOR:GE2N2455	28480	1854-0102	1	
1850-0158	TRANSISTOR:PNP GERMANIUM	28480	1850-0158	1	
1851-0017	TRANSISTOR:2N1304	01295	2N1304	6	
1851-0024	TRANSISTOR:GE NPN 2N388A	12952	N388A	1	
1853-0001	TRANSISTOR:PNP SILICON 30V 900MW	28480	1853-0001	4	
1853-0009	TRANSISTOR:SILICON PNP	28480	1853-0009	15	
1853-0015	TRANSISTOR:SILICON PNP 2N3640	07263	2N3640	6	
1853-0034	TRANSISTOR:SILICON PNP	28480	1853-0034	16	
1854-0003	TRANSISTOR:NPN SILICON	28480	1854-0003	8	
1854-0005	TRANSISTOR:2N708 NPN SILICON PLANAR	07263	2N708	15	
1854-0008	TRANSISTOR:NPN SILICON	28480	1854-0008	1	
1854-0009	TRANSISTOR:2N709 NPN SILICON	07263	2N709	18	
1854-0019	TRANSISTOR:SILICON NPN	28480	1854-0019	2	
1854-0073	TRANSISTOR:SILICON NPN 2N3478	02735	2N3478	2	
1854-0249	TRANSISTOR:DUAL NPN SILICON	28480	1854-0249	2	
1855-0036	TRANSISTOR:DUAL N CHAN FET	28480	1855-0036	2	
1901-0025	SEMICON DEVICE:DIODE JUNCTION	28480	1901-0025	29	
1901-0026	SEMICON DEVICE:DIODE SI	14099	SA-783	5	
1901-0029	SEMICON DEVICE:DIODE SI 600V	28480	1901-0029	2	
1901-0040	DIODE:SILICON:30 MA AT 1V 30 PIV	28480	1901-0040	51	
1901-0045	SEMICON DEVICE:DIODE SI	14099	SA-788	10	
1901-0049	SEMICON DEVICE:DIODE SI	14099	SC-05	4	
1901-0146	SEMICON DEVICE:DIODE SI	94145	RD 2809	4	
1902-0017	SEMICON DEVICE:DIODE SI	28480	1902-0017	2	
1902-0039	SEMICON DEVICE:DIODE 1N1597A	81438	1N1597A/3Z22T5	1	
1902-0057	SEMICON DEVICE:DIODE SILICON	28480	1902-0057	1	
1902-0214	DIODE:SILICON BREAKDOWN 56.2V 10% 1.5W	28480	1902-0214	1	
1902-0580	DIODE BREAKDOWN:SILICON	28480	1902-0580	2	
1910-0015	SEMICON DEVICE:DIODE GERMANIUM	73293	HD-1409	5	
1910-0016	SEMICON DEVICE:DIODE GERMANIUM	93332	D2361	79	
1910-0021	SEMICON DEVICE:DIODE	73293	HPS 1672A	5	
1910-0022	SEMICON DEVICE:DIODE GE 100MA 6PIV 3.5NS	28480	1910-0022	14	
1910-0034	DIODE:GERMANIUM	28480	1910-0034	2	
1970-0009	ELECTRON TUBE:INDICATOR 10 DIGIT	83594	B5991	8	
2100-0318	R:VAR 250K OHM 20% 1/4W/SPST SW	28480	2100)0318	1	
2100-0354	R:VAR WW 1000 OHM 10% LIN 2W	28480	2100 0354	1	
2100-0737	R:VAR WW 200 OHM 5% 1W	28480	2100-0737	1	
2100-1412	R:VAR COMP 500 OHM 20% LIN 1/4W	28480	2100-1412	3	
2100-1513	R:VAR WW 50 OHM 5% 1W	28480	2100-1513	2	
2100-1924	R:VAR COMP 5K OHM 20% 1/5W	28480	2100-1924	1	
2110-0006	FUSE:CARTRIDGE 2AMP 125V SLOW BLOW	71400	MDL2	1	
2110-0007	FUSE:CARTRIDGE 1 AMP 250V SLOW BLOW	71400	MDL 1	1	
2140-0015	LAMP:GLOW NEON NE-2H	24455	NE 2H	6	
2140-0028	LAMP:GLOW 1/15W	24455	NE 2E FROSTED	7	

See list of abbreviations in introduction to this section

Table 4-2. Replaceable Parts (Cont'd)

Stock No.	Description #	Mfr.	Mfr. Part No.	TQ
2190-0046	WASHER:SPLIT LOCK	28480	2190-0046	6
2390-0015	SCREW:MACHINE	73076	OBD	1
3100-0315	SWITCH:ROTARY 6 SECT 10 POSITION	28480	3100-0315	1
3100-0319	SWITCH:ROTARY 10 SECT 10 POSITION	28480	3100-0319	1
3100-0389	SWITCH:ROT 1-SECT 3-POS HP SPEC	28480	3100-0389	1
3100-0390	SWITCH:ROT 2-SECT 9-POS HP SPEC	28480	3100-0390	1
3100-1860	SWITCH:ROTARY	28480	3100-1860	1
3101-0014	SWITCH:PUSH SPDT NE	82389	4S-1106	1
3101-0034	SWITCH:SLIDE 4 PDT 0.5 AMP 125 VDC	42190	6633	1
3101-0037	SWITCH:TOG SPST 3 AMP 125V	04009	83050-A	1
3140-0052	MOTOR:ELECTRICALLY SHADED POLE 115V	28480	3140-0052	1
3150-0037	AIR FILTER ASSY	28480	3150-0037	1
3160-0060	FAN:IMPELLER AXIAL	28480	3160-0060	1
5040-0170	SUPPORT: PRINTED CIRCUIT BOARD	28480	5040-0170	1
8120-0078	CABLE:POWER SVT-18-3 7.5FT.	70903	KH4147	1
8500-0059	SILICONE GREASE(FOR TRANSISTOR HEAT-SINK)	71984	#5 COMPOUND	
9100-0164	TRANSFORMER:POWER	28480	9100-0164	1
9100-0166	TRANSFORMER:POWER	28480	9100-0166	1
9100-0346	COIL:FXD 0.5 UH 20%	36196	H-10886	2
9110-0051	INDUCTOR:A.F.	28480	9110-0051	2
9140-0095	COIL:FXD RF 0.27 UH	28480	9140-0095	1
9140-0125	COIL:VAR 0.9-1.9 UH	28480	9140-0125	2
9140-0126	COIL:VAR 1.76-4.02 UH	28480	9140-0126	2
9140-0127	COIL:VAR 8.3-18.7 UH	28480	9140-0127	2
9140-0136	COIL:FXD RF 22 UH	28480	9140-0136	2
9140-0137	COIL:FXD RF 100 UH	28480	9140-0137	3
9140-0138	COIL:FXD RF 180 UH	28480	9140-0138	3
9140-0142	COIL:FXD RF 2.2 UH	28480	9140-0142	3
9140-0143	COIL:FXD RF 3.3 UH	28480	9140-0143	3
9140-0146	COIL:FXD RF 10 UH	28480	9140-0146	2
9140-0158	COIL:FXD 1.0UH 10%	99800	1025-20	2
9140-0159	COIL:FXD 0.47UH 20%	99800	1025-SERIES	5
9170-0016	BEAD:MAGNETIC	02114	56-590-6513B	1
05212-6011	READOUT BLOCK ASSEMBLY	28480	05212 6011	7
05232-2010	BOARD:BLANK PC	28480	05232-2010	2
05232-6009	DECADE DIVIDER ASSEMBLY	28480	05232-6009	1
05232-6010	DECIMAL COUNTER ASSEMBLY	28480	05232-6010	2
05243-0007	RETAINER:LATCH	28480	05243-0007	1
05243-0008	RETAINER:FRONT PANEL	28480	05243-0008	1
05243-2013	PAWL	28480	05243-2013	1
05243-2014	SHAFT:LATCH	28480	05243-2014	1
05243-2015	KNOB	28480	05243-2015	1
05243-2018	HOUSING:PLUG-IN	28480	05243-2018	1
05243-6036	PANEL:PLUG-IN	28480	05243-6036	1
05245-2005	PANEL:FRONT	28480	05245-2005	1
05245-2007	PANEL:REAR	28480	05245-2007	1
05245-2008	BOARD: BLANK PC	28480	05245-2008	1
05245-2014	BOARD:BLANK PC	28480	05245-2014	2
05245-2015	BOARD:BLANK PC	28480	05245-2015	1
05245-6013	ASSY: OSCILLATOR BOARD	28480	05245-6013	1
05245-6014	BOARD ASSY:INPUT AMPLIFIER	28480	05245-6014	2

See list of abbreviations in introduction to this section

Table 4-2. Replaceable Parts (Cont'd)

℗ Stock No.	Description #	Mfr.	Mfr. Part No.	TQ	
05245-6015	BOARD ASSY:FUNCTION	28480	05245-6015	1	
05245-6016	SWITCH ASSY:ATTENUATOR	28480	05245-6016	1	
5212A-65C	ASSY:DECADE DIVIDER	28480	5212A-65C	6	
5212A-65C-1	BOARD:BLANK P.C.	28480	5212A-65C-1	6	
5212L-4A	ASSY:DECIMAL COUNTER	28480	5212L-4A	5	
5212L-4A-1	BOARD:BLANK P.C.	28480	5212L-4A-1	5	
5212L-83A	SUPPORT:READOUT	28480	5212A-83A	1	
5212L-83B	READOUT:UNITS	28480	5212L-83B	1	
5243A-12C	BRACKET:SWITCH	28480	5243A-12C	3	
5243A-12E	SUPPORT:CAPACITOR	28480	5243A-12E	1	
5243A-12F	BRACKET:CRYSTAL OVEN	28480	5243A-12F	1	
5243A-20A	HOUSING:FAN	28480	5243A-20A	1	
5243A-44A	KIT:5-1/4" RACK MOUNT	28480	5243A-44A	1	
5243A-47C	SUPPORT:PANEL	28480	5243A-47C	1	
5243A-55A	SHIELD:OSCILLATOR	28480	5243A-55A	1	
5243A-65A-1	BOARD:BLANK P.C.	28480	5243A-65A-1	1	
5243A-65C	ASSY:MULTIPLIER	28480	5243A-65C	1	
5243A-65C-1	BOARD:BLANK P.C.	28480	5243A-65C-1	1	
5243A-65H	ASSY:REGULATOR	28480	5243A-65H	1	
5243A-65H-1	BOARD:BLANK P.C.	28480	5243A-65H-1	1	
5243A-65J	ASSY:TIME-BASE CONTROL	28480	5243A-65J	1	
5243A-65J-1	BOARD:BLANK P.C.	28480	5243A-65J-1	1	
5243A-65L	ASSY:RECTIFIER	28480	5243A-65L	1	
5243A-65L-1	BOARD:BLANK P.C.	28480	5243A-65L-1	1	
5243A-65R	ASSY:GATE CONTROL	28480	5243A-65R	1	
5243A-65R-1	BOARD:BLANK P.C.	28480	5243A-65R-1	1	
5243A-65S	ASSY:SAMPLING CONTROL	28480	5243A-65S	1	
5243A-65S-1	BOARD:BLANK P.C.	28480	5243A-65S-1	1	
5243A-65T	ASSY:OVEN CONTROL	28480	5243A-65T	1	
5243A-65T-1	BOARD:BLANK P.C.	28480	5243A-65T-1	1	
5243A-69A	ASSY:CRYSTAL OVEN	28480	5243A-69A	1	
5243A-69A-1	BOARD:BLANK P.C.	28480	5243A 69A 1	1	
5243A-6A	GUARD:FAN	28480	5243A-6A	1	
5243L-107A	BAR:READOUT	28480	5243L-107A	1	
5243L-110A	GUIDE:BOARD FRONT	28480	5243L-110A	1	
5243L-110B	GUIDE:BOARD REAR	28480	5243L-110B	1	
5243L-110C	GUIDE:BOARD DUAL	28480	5243L-110C	1	
5243L-12B	BRACKET:BOARD	28480	5243L-12B	1	
5243L-12C	BRACKET:BOARD GUIDE	28480	5243L-12C	1	
5243L-17A	BUSHING:LATCH	28480	5243L-17A	1	
5243L-41A	PLATE:CASTING	28480	5243L-41A	1	
5243L-55B	SHIELD:INPUT	28480	5243L-55B	1	
5243L-65A	ASSY:DECIMAL POINT	28480	5243L-65A	1	
5243L-65B	ASSY:MEASUREMENT UNITS	28480	5243L-65B	1	
5243L-65B-1	BOARD:BLANK P.C.	28480	5243L-65B-1	1	
5243L-83A	HOLDER:DECIMAL	28480	5243L-83A	1	
5243L-83B	COVER:READOUT	28480	5243L-83B	1	
5243L-83C	INSERT:UNITS READOUT	28480	5243L-83C	1	

See list of abbreviations in introduction to this section

Table 4-2. Replaceable Parts (Cont'd)

℗ Stock No.	Description #	Mfr.	Mfr. Part No.	TQ	
5243L-91A	SPRING:LATCH	28480	5243L-91A	1	
5243L-99A	WINDOW	28480	5243L-99A	1	
5245A-65C	ASSY:DECIMAL COUNTER	28480	5245A-65C	1	
5245A-65C-1	BOARD:BLANK P.C.	28480	5245A-65C-1	1	
5245L-19A	ASSY:OUTPUT SWITCH	28480	5245L-19A	1	
5245L-19B	ASSY:MODE SWITCH	28480	5245L-19B	1	
5245L-4B	ASSY:READOUT	28480	5245L-4B	1	
5245L-55A	SHIELD:AMPLIFIER	28480	5245L-55A	1	

See list of abbreviations in introduction to this section

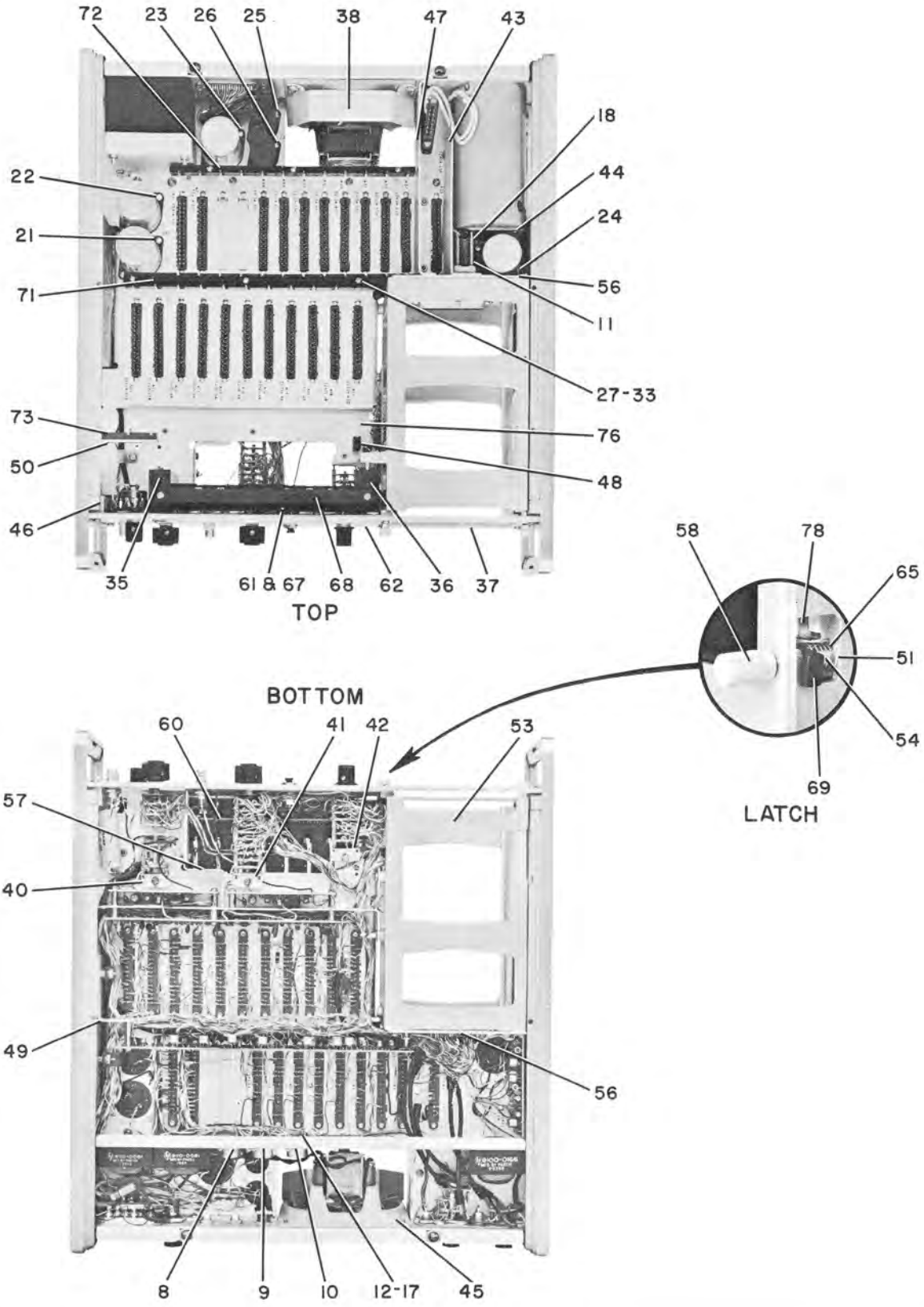

Figure 4-2. Mechanical Parts Locations

Table 4-3. Manufacturer's Code List

The following code numbers are from the Federal Supply Code for Manufacturers Cataloging Handbooks H4-1 (Name to Code) and H4-2 (Code to Name) and their latest supplements. The date of revision and the date of the supplements used appear at the bottom of each page. Alphabetical codes have been arbitrarily assigned to suppliers not appearing in the H4 Handbooks.

Code No.	Manufacturer	Address
00000	U. S. A. Common	Any supplier of U. S.
00136	McCoy Electronics	Mount Holly Springs, Pa.
00213	Sage Electronics Corp.	Rochester, N. Y.
00287	Cemco Inc.	Danielson, Conn.
00334	Humidial	Colton, Calif.
00348	Microtron Co., Inc.	Valley Stream, N. Y.
00373	Garlock Inc., Electronics Products Div.	Camden, N. J.
00656	Aerovox Corp.	New Bedford, Mass.
00779	Amp. Inc.	Harrisburg, Pa.
00781	Aircraft Radio Corp.	Boonton, N. J.
00815	Northern Engineering Laboratories, Inc.	Burlington, Wis.
00853	Sangamo Electric Co., Pickens Div.	Pickens, S. C.
00866	Goe Engineering Co.	Los Angeles, Calif.
00891	Carl E. Holmes Corp.	Los Angeles, Calif.
00929	Microlab Inc.	Livingston, N. J.
01009	Alden Products Co.	Brockton, Mass.
01121	Allen Bradley Co.	Milwaukee, Wis.
01255	Litton Industries, Inc.	Beverly Hills, Calif.
01281	TRW Semiconductors, Inc.	Lawndale, Calif.
01295	Texas Instruments, Inc., Transistor Products Div.	Dallas, Texas
01349	The Alliance Mfg. Co.	Alliance, Ohio
01589	Pacific Relays, Inc.	Van Nuys, Calif.
01930	Amerock Corp.	Rockford, Ill.
01961	Pulse Engineering Co.	Santa Clara, Calif.
02114	Ferroxcube Corp. of America	Saugerties, N. Y.
02286	Cole Rubber and Plastics Inc.	Sunnyvale, Calif.
02660	Amphenol-Borg Electronics Corp.	Chicago, Ill.
02735	Radio Corp. of America, Semiconductor and Materials Div.	Somerville, N. J.
02771	Vocaline Co. of America, Inc.	Old Saybrook, Conn.
02777	Hopkins Engineering Co.	San Fernando, Calif.
03508	G. E. Semiconductor Prod. Dept.	Syracuse, N. Y.
03705	Apex Machine & Tool Co.	Dayton, Ohio
03797	Eldema Corp.	Compton, Calif.
03877	Transitron Electric Corp.	Wakefield, Mass.
03888	Pyrofilm Resistor Co., Inc.	Cedar Knolls, N. J.
03954	Singer Co., Diehl Div. Finderne Plant	Sumerville, N. J.
04009	Arrow, Hart and Hegeman Elect. Co.	Hartford, Conn.
04013	Taurus Corp.	Lambertville, N. J.
04222	Hi-Q Division of Aerovox	Myrtle Beach, S. C.
04354	Precision Paper Tube Co.	Chicago, Ill.
04404	Dymec Division of Hewlett-Packard Co.	Palo Alto, Calif.
04651	Sylvania Electric Products, Microwave Device Div.	Mountain View, Calif.
04713	Motorola, Inc., Semiconductor Prod. Div.	Phoenix, Arizona
04732	Filtron Co., Inc. Western Div.	Culver City, Calif.
04773	Automatic Electric Co.	Northlake, Ill.
04796	Sequoia Wire Co.	Redwood City, Calif.
04811	Precision Coil Spring Co.	El Monte, Calif.
04870	P.M. Motor Company	Westchester, Ill.
05006	Twentieth Century Plastics, Inc.	Los Angeles, Calif.
05277	Westinghouse Electric Corp. Semi-Conductor Dept.	Youngwood, Pa.
05347	Ultronix, Inc.	San Mateo, Calif.
05593	Illumitronic Engineering Co.	Sunnyvale, Calif.
05616	Cosmo Plastic (c o Electrical Spec. Co.)	Cleveland, Ohio
05624	Barber Colman Co.	Rockford, Ill.
05728	Tiffen Optical Co.	Roslyn Heights, Long Island, N. Y.
05729	Metro-Tel Corp.	Westbury, N. Y.
05783	Stewart Engineering Co.	Santa Cruz, Calif.
05820	Wakefield Engineering Inc.	Wakefield, Mass.
06004	Bassick Co., The	Bridgeport, Conn.
06090	Raychem Corp.	Redwood City, Calif.
06175	Bausch and Lomb Optical Co.	Rochester, N. Y.
06402	E. T. A. Products Co. of America	Chicago, Ill.
06540	Amatom Electronic Hardware Co., Inc.	New Rochelle, N. Y.
06555	Beede Electrical Instrument Co., Inc.	Penacook, N. H.
06666	General Devices Co., Inc.	Indianapolis, Ind.
06751	Semcor Div. Components Inc.	Phoenix, Ariz.
06812	Torrington Mfg. Co., West Div.	Van Nuys, Calif.
06980	Varian Assoc. Eimac Div.	San Carlos, Calif.
07088	Kelvin Electric Co.	Van Nuys, Calif.
07126	Digitran Co.	Pasadena, Calif.
07137	Transistor Electronics Corp	Minneapolis, Minn.
07138	Westinghouse Electric Corp. Electronic Tube Div.	Elmira, N. Y.
07149	Frimohm Corp.	New York, N. Y.
07233	Cinch-Graphik Co.	City of Industry, Calif.
07261	Avnet Corp.	Culver City, Calif.
07263	Fairchild Camera & Inst. Corp. Semiconductor Div.	Mountain View, Calif.
07322	Minnesota Rubber Co.	Minneapolis, Minn.
07387	Birtcher Corp., The	Monterey Park, Calif.
07700	Technical Wire Products Inc.	Cranford, N. J.
07910	Continental Device Corp.	Hawthorne, Calif.
07933	Raytheon Mfg. Co., Semiconductor Div.	Mountain View, Calif.
07966	Shockley Semi-Conductor Laboratories	Palo Alto, Calif.
07980	Hewlett-Packard Co., Boonton Radio Div.	Rockaway, N. J.
08145	U. S. Engineering Co.	Los Angeles, Calif.
08289	Blinn, Delbert Co.	Pomona, Calif.
08358	Burgess Battery Co.	Niagara Falls, Ontario, Canada
08664	Bristol Co., The	Waterbury, Conn.
08717	Sloan Company	Sun Valley, Calif.
08718	ITT Cannon Electric Inc., Phoenix Div.	Phoenix, Arizona
08792	CBS Electronics Semiconductor Operations, Div of C. B. S. Inc.	Lowell, Mass.
08984	Mel-Rain	Indianapolis, Ind.
09026	Babcock Relays Div.	Costa Mesa, Calif.
09134	Texas Capacitor Co.	Houston, Texas
09145	Atohm Electronics	Sun Valley, Calif.
09250	Electro Assemblies, Inc.	Chicago, Ill.
09569	Mallory Battery Co. of Canada, Ltd.	Toronto, Ontario, Canada
10214	General Transistor Western Corp.	Los Angeles, Calif.
10411	Tri-Tal, Inc.	Berkeley, Calif.
10646	Carborundum Co.	Niagara Falls, N. Y.
11236	CTS of Berne, Inc.	Berne, Ind.
11237	Chicago Telephone of California, Inc.	So. Pasadena, Calif.
11242	Bay State Electronics Corp.	Waltham, Mass.
11312	Teledyne Inc., Microwave Div.	Palo Alto, Calif.
11534	Duncan Electronics Inc.	Costa Mesa, Calif.
11711	General Instrument Corp., Semiconductor Div., Products Group	Newark, N. J.
11717	Imperial Electronic, Inc.	Buena Park, Calif.
11870	Metabs, Inc.	Palo Alto, Calif.
12136	Philadelphia Handle Co.	Camden, N. J.
12697	Clarostat Mfg. Co.	Dover, N. H.
12859	Nippon Electric Co., Ltd.	Tokyo, Japan
12881	Metex Electronics Corp.	Clark, N. J.
12930	Delta Semiconductor Inc.	Newport Beach, Calif.
12954	Dickson Electronics Corp.	Scottsdale, Arizona
13103	Thermolloy	Dallas, Texas
13396	Telefunken (GmbH)	Hanover, Germany
13835	Midland-Wright Div. of Pacific Industries, Inc.	Kansas City, Kansas
14099	Sem-Tech	Newbury Park, Calif.
14193	Calif. Resistor Corp.	Santa Monica, Calif.
14298	American Components, Inc.	Conshohocken, Pa.
14433	ITT Semiconductor, A Div. of Int. Telephone & Telegraph Corp.	West Palm Beach, Fla.
14493	Hewlett-Packard Company	Loveland, Colo.
14655	Cornell Dublier Electric Corp.	Newark, N. J.
14674	Corning Glass Works	Corning, N. Y.
14752	Electro Cube Inc.	So. Pasadena, Calif.
14960	Williams Mfg. Co.	San Jose, Calif.
15203	Webster Electronics Co.	New York, N. Y.
15291	Adjustable Bushing Co.	N. Hollywood, Calif.
15558	Micron Electronics	Garden City, Long Island, N. Y.
15566	Amprobe Inst. Corp.	Lynbrook, N. Y.
15772	Twentieth Century Coil Spring Co.	Santa Clara, Calif.
15818	Amelco Inc.	Mt. View, Calif.
15909	Daven Div. Thomas A. Edison Ind. McGraw-Edison Co.	Long Island City, N. Y.
16037	Spruce Pine Mica Co.	Spruce Pine, N. C.
16179	Omni-Spectra Inc.	Detroit, Ill.
16352	Computer Diode Corp.	Lodi, N. J.
16688	Ideal Prec. Meter Co., Inc. De Jur Meter Div.	Brooklyn, N. Y.
16758	Delco Radio Div. of G.M. Corp.	Kokomo, Inc.
17109	Thermonetics Inc.	Canoga Park, Calif.
17474	Tranex Company	Mountain View, Calif.
17675	Hamlin Metal Products Corp.	Akron, Ohio
17745	Angstrohm Prec. Inc.	No. Hollywood, Calif.
18042	Power Design Pacific Inc.	Palo Alto, Calif.
18476	Ty-Car Mfg. Co., Inc.	Holliston, Mass.
18486	TRW Elect. Comp. Div.	Des Plaines, Ill.
18583	Curtis Instrument, Inc.	Mt. Kisco, N. Y.
18873	E. I. DuPont and Co., Inc.	Wilmington, Del.
18911	Durant Mfg. Co.	Milwaukee, Wis.
19315	Bendix Corp., The Eclipse-Poineer Div.	Teterboro, N. J.
19500	Thomas A. Edison Industries, Div. of McGraw-Edison Co.	West Orange, N. J.
19644	LRC Electronics	Horseheads, N. Y.
19701	Electra Mfg. Co.	Independence, Kansas
20183	General Atronics Corp.	Philadelphia, Pa.
21226	Executone, Inc.	Long Island City, N. Y.
21335	Fafnir Bearing Co., The	New Britain, Conn.
21520	Fansteel Metallurgical Corp.	N. Chicago, Ill.
23783	British Radio Electronics Ltd.	Washington, D. C.
24455	G.E. Lamp Division	Nela Park, Cleveland, Ohio
24655	General Radio Co.	West Concord, Mass.
26365	Gries Reproducer Corp.	New Rochelle, N. Y.
26462	Grobet File Co. of America, Inc.	Carlstadt, N. J.
26992	Hamilton Watch Co.	Lancaster, Pa.
28480	Hewlett-Packard Co.	Palo Alto, Calif.
33173	G. E. Receiving Tube Dept.	Owensboro, Ky.
35434	Lectrohm Inc.	Chicago, Ill.
36196	Stanwyck Coil Products Ltd.	Hawkesbury, Ontario, Canada
37942	P. R. Mallory & Co. Inc.	Indianapolis, Ind.
39543	Mechanical Industries Prod. Co.	Akron, Ohio
40920	Miniature Precision Bearings, Inc.	Keene, N.H.
42190	Muter Co.	Chicago, Ill.
43990	C. A. Norgren Co.	Englewood, Colo.

00015 42
Revised: July, 1966

From: FSC. Handbook Supplements
H4-1 Dated JULY 1965
H4-2 Dated NOV 1962

Table 4-3. Manufacturer's Code List (Cont'd)

Code No.	Manufacturer	Address
44655	Ohmite Mfg. Co.	Skokie, Ill.
46384	Penn Eng. & Mfg. Corp.	Doylestown, Pa.
47904	Polaroid Corp.	Cambridge, Mass.
48620	Precision Thermometer & Inst. Co.	Southampton, Pa.
49956	Microwave & Power Tube Div.	Waltham, Mass.
52090	Rowan Controller Co.	Westminster, Md.
52983	Sanborn Company	Waltham, Mass.
54294	Shallcross Mfg. Co.	Selma, N.C.
55026	Simpson Electric Co.	Chicago, Ill.
55933	Sonotone Corp.	Elmsford, N.Y.
55938	Raytheon Co. Commercial Apparatus & Systems Div.	So. Norwalk, Conn.
56137	Spaulding Fibre Co., Inc.	Tonawanda, N.Y.
56289	Sprague Electric Co.	North Adams, Mass.
59446	Telex, Inc.	St. Paul, Minn.
59730	Thomas & Betts Co.	Elizabeth, N.J.
60741	Triplett Electrical Inst. Co.	Bluffton, Ohio
61775	Union Switch and Signal, Div. of Westinghouse Air Brake Co.	Pittsburgh, Pa.
62119	Universal Electric Co.	Owosso, Mich.
63743	Ward-Leonard Electric Co.	Mt. Vernon, N.Y.
64959	Western Electric Co., Inc.	New York, N.Y.
65092	Weston Inst. Inc. Weston-Newark	Newark, N.J.
66295	Wittek Mfg. Co.	Chicago, Ill.
66346	Revere Wollansak Div. Minn. Mining & Mfg. Co.	St. Paul, Minn.
70276	Allen Mfg. Co.	Hartford, Conn.
70318	Allmetal Screw Product Co., Inc.	Garden City, N.Y.
70485	Atlantic India Rubber Works, Inc.	Chicago, Ill.
70563	Amperite Co., Inc.	Union City, N.J.
70903	Belden Mfg. Co.	Chicago, Ill.
70998	Bird Electronic Corp.	Cleveland, Ohio
71002	Birnbach Radio Co.	New York, N.Y.
71041	Boston Gear Works Div. of Murray Co. of Texas	Quincy, Mass.
71218	Bud Radio, Inc.	Willoughby, Ohio
71286	Camloc Fastener Corp.	Paramus, N.J.
71313	Cardwell Condenser Corp.	Lindenhurst L.I., N.Y.
71400	Bussmann Mfg. Div. of McGraw-Edison Co.	St. Louis, Mo.
71436	Chicago Condenser Corp.	Chicago, Ill.
71447	Calif. Spring Co., Inc.	Pico-Rivera, Calif.
71450	CTS Corp.	Elkhart, Ind.
71468	ITT Cannon Electric Inc.	Los Angeles, Calif.
71471	Cinema Plant, Hi-Q Div. Aerovox Corp.	Burbank, Calif.
71482	C.P. Clare & Co.	Chicago, Ill.
71590	Centralab Div. of Globe Union Inc.	Milwaukee, Wis.
71616	Commercial Plastics Co.	Chicago, Ill.
71700	Cornish Wire Co., The	New York, N.Y.
71707	Coto Coil Co., Inc.	Providence, R.I.
71744	Chicago Miniature Lamp Works	Chicago, Ill.
71753	A.O. Smith Corp., Crowley Div.	West Orange, N.J.
71785	Cinch Mfg. Co., Howard B. Jones Div.	Chicago, Ill.
71984	Dow Corning Corp.	Midland, Mich.
72136	Electro Motive Mfg. Co., Inc.	Willimantic, Conn.
72354	John E. Fast Co., Div. Victoreen Instr. Co.	Chicago, Ill.
72619	Dialight Corp.	Brooklyn, N.Y.
72656	Indiana General Corp., Electronics Div.	Keasby, N.J.
72699	General Instrument Corp., Cap. Div.	Newark, N.J.
72765	Drake Mfg. Co.	Chicago, Ill.
72825	Hugh H. Eby Inc.	Philadelphia, Pa.
72928	Gudeman Co.	Chicago, Ill.
72964	Robert M. Hadley Co.	Los Angeles, Calif.
72982	Erie Technological Products, Inc.	Erie, Pa.
73061	Hansen Mfg. Co., Inc.	Princeton, Ind.
73076	H.M. Harper Co.	Chicago, Ill.
73138	Helipot Div. of Beckman Inst., Inc.	Fullerton, Calif.
73293	Hughes Products Division of Hughes Aircraft Co.	Newport Beach, Calif.
73445	Amperex Electronic Co., Div. of North American Phillips Co., Inc.	Hicksville, N.Y.
73506	Bradley Semiconductor Corp.	New Haven, Conn.
73559	Carling Electric, Inc.	Hartford, Conn.
73682	George K. Garrett Co., Div. MSL Industries Inc.	Philadelphia, Pa.
73734	Federal Screw Products Inc.	Chicago, Ill.
73743	Fischer Special Mfg. Co.	Cincinnati, Ohio
73793	General Industries Co., The	Elyria, Ohio
73846	Goshen Stamping & Tool Co.	Goshen, Ind.
73899	JFD Electronics Corp.	Brooklyn, N.Y.
73905	Jennings Radio Mfg. Corp.	San Jose, Calif.
74276	Signalite Inc.	Neptune, N.J.
74455	J.H. Winns, and Sons	Winchester, Mass.
74861	Industrial Condenser Corp.	Chicago, Ill.
74868	R.F. Products Division of Amphenol-Borg Electronics Corp.	Danbury, Conn.
74970	E.F. Johnson Co.	Waseca, Minn.
75042	International Resistance Co.	Philadelphia, Pa.
75378	CTS Knights Inc.	Sandwich, Ill.
75382	Kulka Electric Corporation	Mt. Vernon, N.Y.
75818	Lenz Electric Mfg. Co.	Chicago, Ill.
75915	Littlefuse, Inc.	Des Plaines, Ill.
76005	Lord Mfg. Co.	Erie, Pa.
76210	C.W. Marwedel	San Francisco, Calif.
76487	James Millen Mfg. Co., Inc.	Malden, Mass.
76493	J.W. Miller Co.	Los Angeles, Calif.
76530	Cinch-Monadnock, Div. of United Carr Fastener Corp.	San Leandro, Calif.
76545	Mueller Electric Co.	Cleveland, Ohio
76703	National Union	Newark, N.J.
76854	Oak Manufacturing Co.	Crystal Lake, Ill.
77068	Bendix Corp., The Bendix Pacific Div.	N. Hollywood, Calif.
77075	Pacific Metals Co.	San Francisco, Calif.
77221	Phanostran Instrument and Electronic Co.	South Pasadena, Calif.
77252	Philadelphia Steel and Wire Corp.	Philadelphia, Pa.
77342	American Machine & Foundry Co. Potter & Brumfield Div.	Princeton, Ind.
77630	TRW Electronic Components Div.	Camden, N.J.
77638	General Instrument Corp., Rectifier Div.	Brooklyn, N.Y.
77764	Resistance Products Co.	Harrisburg, Pa.
77969	Rubbercraft Corp. of Calif.	Torrance, Calif.
78189	Shakeproof Division of Illinois Tool Works	Elgin, Ill.
78283	Signal Indicator Corp.	New York, N.Y.
78290	Struthers-Dunn Inc.	Pitman, N.J.
78452	Thompson-Bremer & Co.	Chicago, Ill.
78471	Tilley Mfg. Co.	San Francisco, Calif.
78488	Stackpole Carbon Co.	St. Marys, Pa.
78493	Standard Thomson Corp.	Waltham, Mass.
78553	Tinnerman Products, Inc.	Cleveland, Ohio
78790	Transformer Engineers	San Gabriel, Calif.
78947	Ucinite Co.	Newtonville, Mass.
79136	Waldes Kohinoor Inc.	Long Island City, N.Y.
79142	Veeder Root, Inc.	Hartford, Conn.
79251	Wenco Mfg. Co.	Chicago, Ill.
79727	Continental-Wirt Electronics Corp.	Philadelphia, Pa.
79963	Zierick Mfg. Corp.	New Rochelle, N.Y.
80031	Mepco Division of Sessions Clock Co.	Morristown, N.J.
80120	Schnitzer Alloy Products Co.	Elizabeth, N.J.
80130	Times Telephoto Equipment	New York, N.Y.
80131	Electronic Industries Association. Any brand Tube meeting EIA Standards-Washington, DC.	
80207	Unimax Switch, Div. Maxon Electronics Corp.	Wallingford, Conn.
80223	United Transformer Corp.	New York, N.Y.
80248	Oxford Electric Corp.	Chicago, Ill.
80294	Bourns Inc.	Riverside, Calif.
80411	Acro Div. of Robertshaw Controls Co.	Columbus, Ohio
80486	All Star Products Inc.	Defiance, Ohio
80509	Avery Adhesive Label Corp.	Monrovia, Calif.
80583	Hammarlund Co., Inc.	New York, N.Y.
80640	Stevens, Arnold, Co., Inc.	Boston, Mass.
81030	International Instruments Inc.	Orange, Conn.
81073	Grayhill Co.	LaGrange, Ill.
81095	Triad Transformer Corp.	Venice, Calif.
81312	Winchester Elec. Div. Litton Ind., Inc.	Oakville, Conn.
81349	Military Specification	. . . . .
81483	International Rectifier Corp.	El Segundo, Calif.
81541	Airpax Electronics, Inc.	Cambridge, Mass.
81860	Barry Controls, Div. Barry Wright Corp.	Watertown, Mass.
82042	Carter Precision Electric Co.	Skokie, Ill.
82047	Sperti Faraday Inc., Copper Hewitt Electric Div.	Hoboken, N.J.
82142	Jeffers Electronics Division of Speer Carbon Co.	Du Bois, Pa.
82170	Fairchild Camera & Inst. Corp., Defense Prod. Division	Clifton, N.J.
82209	Maguire Industries, Inc.	Greenwich, Conn.
82219	Sylvania Electric Prod. Inc. Electronic Tube Division	Emporium, Pa.
82376	Astron Corp.	East Newark, Harrison, N.J.
82389	Switchcraft, Inc.	Chicago, Ill.
82647	Metals & Controls Inc. Spencer Products	Attleboro, Mass.
82768	Phillips-Advance Control Co.	Joliet, Ill.
82866	Research Products Corp.	Madison, Wis.
82877	Rotron Mfg. Co., Inc.	Woodstock, N.Y.
82893	Vector Electronic Co.	Glendale, Calif.
83053	Western Washer Mfg. Co.	Los Angeles, Calif.
83058	Carr Fastener Co.	Cambridge, Mass.
83086	New Hampshire Ball Bearing, Inc.	Peterborough, N.H.
83125	General Instrument Corp., Capacitor Div.	Darlington, S.C.
83148	ITT Wire and Cable Div.	Los Angeles, Calif.
83186	Victory Engineering Corp.	Springfield, N.J.
83298	Bendix Corp., Red Bank Div.	Red Bank, N.J.
83315	Hubbell Corp.	Mundelein, Ill.
83330	Smith, Herman H., Inc.	Brooklyn, N.Y.
83385	Central Screw Co.	Chicago, Ill.
83501	Gavitt Wire and Cable Co. Div. of Amerace Corp.	Brookfield, Mass.
83594	Burroughs Corp. Electronic Tube Div.	Plainfield, N.J.
83740	Union Carbide Corp. Consumer Prod. Div.	New York, N.Y.
83777	Model Eng. and Mfg., Inc.	Huntington, Ind.
83821	Loyd Scruggs Co.	Festus, Mo.
83942	Aeronautical Inst. & Radio Co.	Lodi, N.J.
84171	Arco Electronics Inc.	Great Neck, N.Y.
84396	A.J. Glesener Co., Inc.	San Francisco, Calif.
84411	TRW Capacitor Div.	Ogallala, Neb.
84970	Sarkes Tarzian, Inc.	Bloomington, Ind.
85454	Boonton Molding Company	Boonton, N.J.

From: FSC. Handbook Supplements
H4-1 Dated JULY 1965
H4-2 Dated NOV. 1962

00015-42
Revised: July, 1966

Table 4-3. Manufacturer's Code List (Cont'd)

Code No.	Manufacturer	Address
85471	A. B. Boyd Co.	San Francisco, Calif.
85474	R. M. Bracamonte & Co.	San Francisco, Calif.
85660	Koiled Kords, Inc.	Hamden, Conn.
85911	Seamless Rubber Co.	Chicago, Ill.
86197	Clifton Precision Products Co., Inc.	Clifton Heights, Pa.
86579	Precision Rubber Products Corp.	Dayton, Ohio
86684	Radio Corp. of America, Electronic Comp. & Devices Div.	Harrison, N. J.
87034	Marco Industries	Anaheim, Calif.
87216	Philco Corporation (Lansdale Division)	Lansdale, Pa.
87473	Western Fibrous Glass Products Co.	San Francisco, Calif.
87664	Van Waters & Rogers Inc.	San Francisco, Calif.
87930	Tower Mfg. Corp.	Providence, R. I.
88140	Cutler-Hammer, Inc.	Lincoln, Ill.
88220	Gould-National Batteries, Inc.	St. Paul, Minn.
88421	Federal Telephone & Radio Corp.	Clifton, N. J.
88698	General Mills, Inc.	Buffalo, N. Y.
89231	Graybar Electric Co.	Oakland, Calif.
89665	United Transformer Co.	Chicago, Ill.
90179	US Rubber Co., Consumer Ind. & Plastics Prod. Div.	Passaic, N. J.
90970	Bearing Engineering Co.	San Francisco, Calif.
91260	Connor Spring Mfg. Co.	San Francisco, Calif.
91345	Miller Dial & Nameplate Co.	El Monte, Calif.
91418	Radio Materials Co.	Chicago, Ill.
91506	Augat Inc.	Attleboro, Mass.
91637	Dale Electronics, Inc.	Columbus, Nebr.
91662	Elco Corp.	Willow Grove, Pa.
91737	Gremar Mfg. Co., Inc.	Wakefield, Mass.
91827	K F Development Co.	Redwood City, Calif.
91929	Honeywell Inc., Micro Switch Div.	Freeport, Ill.
91961	Nahm-Bros. Spring Co.	Oakland, Calif.
92180	Tru-Connector Corp.	Peabody, Mass.
92367	Elgeet Optical Co. Inc.	Rochester, N. Y.
92196	Universal Industries, Inc.	City of Industry, Calif.
92607	Tensolite Insulated Wire Co., Inc.	Tarrytown, N. Y.
93332	Sylvania Electric Prod. Inc. Semiconductor Div.	Woburn, Mass.
93369	Robbins and Myers, Inc.	New York, N. Y.
93410	Stevens Mfg. Co., Inc.	Mansfield, Ohio
93929	G. V. Controls	Livingston, N. J.
94137	General Cable Corp.	Bayonne, N. J.
94144	Raytheon Co., Comp. Div., Ind. Comp. Operations	Quincy, Mass.
94148	Scientific Electronics Products, Inc.	Loveland, Colo.
94154	Tung-Sol Electric, Inc.	Newark, N. J.
94197	Curtiss-Wright Corp. Electronics Div.	East Paterson, N. J.
94222	South Chester Corp.	Chester, Pa.
94310	Tru-Ohm Products Memcor Components Div.	Huntington, Ind.
94330	Wire Cloth Products, Inc.	Bellwood, Ill.
94682	Worcester Pressed Aluminum Corp.	Worcester, Mass.
94696	Magnecraft Electric Co.	Chicago, Ill.
95023	George A. Philbrick Researchers, Inc.	Boston, Mass.
95236	Allies Products Corp.	Miami, Fla.
95238	Continental Connector Corp.	Woodside, N. Y.
95263	Leecraft Mfg. Co., Inc.	Long Island, N. Y.
95264	Lerco Electronics, Inc.	Burbank, Calif.
95265	National Coil Co.	Sheridan, Wyo.
95275	Vitramon, Inc.	Bridgeport, Conn.
95348	Gordos Corp.	Bloomfield, N. J.
95354	Methode Mfg. Co.	Chicago, Ill.
95712	Dage Electric Co., Inc.	Franklin, Ind.
95984	Siemon Mfg. Co.	Wayne, Ill.
95987	Weckesser Co.	Chicago, Ill.
96067	Huggins Laboratories	Sunnyvale, Calif.
96095	Hi-Q Div. of Aerovox Corp.	Olean, N. Y.
96256	Thordarson-Meissner Inc.	Mt. Carmel, Ill.
96296	Solar Manufacturing Co.	Los Angeles, Calif.
96330	Carlton Screw Co.	Chicago, Ill.
96341	Microwave Associates, Inc.	Burlington, Mass.
96501	Excel Transformer Co.	Oakland, Calif.
97464	Industrial Retaining Ring Co.	Irvington, N. J.
97539	Automatic & Precision Mfg.	Englewood, N. J.
97979	Reon Resistor Corp.	Yonkers, N. Y.
97983	Litton System Inc., Adler-Westrex Commun. Div.	New Rochelle, N. Y.
98141	R-Troncis, Inc.	Jamaica, N. Y.
98159	Rubber Teck, Inc.	Gardena, Calif.
98220	Hewlett-Packard Co., Moseley Div.	Pasadena, Calif.
98278	Microdot, Inc.	So. Pasadena, Calif.
98291	Sealectro Corp.	Mamaroneck, N. Y.
98376	Zero Mfg. Co.	Burbank, Calif.
98731	General Mills Inc., Electronics Div.	Minneapolis, Minn.
98734	Paeco Div. of Hewlett-Packard Co.	Palo Alto, Calif.
98821	North Hills Electronics, Inc.	Glen Cove, N. Y.
98978	International Electronic Research Corp.	Burbank, Calif.
99109	Columbia Technical Corp.	New York, N. Y.
99313	Varian Associates	Palo Alto, Calif.
99378	Atlee Corp.	Winchester, Mass.
99515	Marshall Ind. Elect. Products Div.	San Marino, Calif.
99707	Control Switch Division, Controls Co. of America	El Segundo, Calif.
99800	Delevan Electronics Corp.	East Aurora, N. Y.
99848	Wilco Corporation	Indianapolis, Ind.
99934	Renbrandt, Inc.	Boston, Mass.
99942	Hoffman Electronics Corp. Semiconductor Div.	El Monte, Calif.
99957	Technology Instrument Corp. of Calif.	Newbury Park, Calif.

THE FOLLOWING HP VENDORS HAVE NO NUMBER ASSIGNED IN THE LATEST SUPPLEMENT TO THE FEDERAL SUPPLY CODE FOR MANUFACTURERS HANDBOOK.

0000F	Malco Tool and Die	Los Angeles, Calif.
0000M	Western Coil Div. of Automatic Ind., Inc.	Redwood City, Calif.
0000Z	Willow Leather Products Corp.	Newark, N. J.
000AA	British Radio Electronics Ltd.	Washington, D. C.
000AB	ETA	England
000BB	Precision Instrument Components Co.	Van Nuys, Calif.
000MM	Rubber Eng. & Development	Hayward, Calif.
000NN	A "N" D Mfg. Co.	San Jose, Calif.
000QQ	Cooltron	Oakland, Calif.
000WW	California Eastern Lab.	Burlington, Calif.
000YY	S. K. Smith Co.	Los Angeles, Calif.

From: FSC. Handbook Supplements
H4-1 Dated JULY 1965
H4-2 Dated NOV. 1962

00015-42
Revised: July, 1966

SECTION V
OPTIONS AND MANUAL CHANGES

5-1. OPTIONS.

5-2. The 5245L has two options available. They are Option 02, 4-line BCD 1-2-4-8 "1" state positive and Option 03, 4-line BCD 1-2-4-8 "1" state negative. These options change the BCD output code of the digits. The decimal point and measurement units BCD output code is 1-2-2-4 "1" state positive.

5-3. OPTION 02 +1248 BCD CODE.

5-4. Option 02 consists of changing the assemblies listed in Table 5-1. Circuit diagrams for the Option 02 assemblies are shown in Figures 7-10, 7-12, and 7-15.

Table 5-1. Option 02 Replacement Assemblies

Standard Assemblies	Option 02 Assemblies
A10-A14 DCA 5212L-4A	A10-A14 DCA 05212-6002
A15-A16 DCA 05232-6010	A15-A16 DCA 05232-6002
A18 Readout 5245L-4B	A18 Readout 05245-6001

5-5. OPTION 03 -1248 BCD CODE.

5-6. Option 03 consists of changing the assemblies listed in Table 5-2. Circuit diagrams for the Option 03 assemblies are shown in Figures 7-10, 7-12, and 7-16.

Table 5-2. Option 03 Replacement Assemblies

Standard Assemblies	Option 03 Assemblies
A10-A14 DCA 5212L-4A	A10-A14 DCA 05212-6003
A15-A16 DCA 05232-6010	A15-A16 DCA 05232-6003
A18 Readout 5245L-4B	A18 Readout 05245-6003

5-7. The parts lists for the Option 02 and 03 assemblies are listed in Tables 5-4, 5-5, 5-6, and 5-7.

5-8. Figures 7-10 and 7-12 are used for both Option 02 +1-2-4-8 BCD output and Option 03 -1-2-4-8 BCD output. The boards are identical with one exception. The DCA's with "1" state positive BCD output have resistors marked with a double asterisk (**) connected to collectors as shown by + + lines. The DCA's with "1" state negative BCD output have these resistors connected to opposite collectors as shown by - - - lines.

Table 5-3. 1-2-4-8 Code Truth Table

Digit	4-Line Code, 1-2-4-8			
	D = 8	C = 4	B = 2	A = 1
0	0	0	0	0
1	0	0	0	1
2	0	0	1	0
3	0	0	1	1
4	0	1	0	0
5	0	1	0	1
6	0	1	1	0
7	0	1	1	1
8	1	0	0	0
9	1	0	0	1
Option 02: Output Code: 0 = -8V, 1 = +18V Option 03: Output Code: 1 = -8V, 0 = +18V				

5-9. SPECIALS.

5-10. Decimal Point and Measurement Units assemblies with either "1" state positive or negative 1-2-4-8 BCD output may be obtained by special order. Specification J35-5245L is a modified 5245L that provides a 1-2-4-8 "1" state positive BCD code for all eight digits, decimal point assembly, and measurement units assembly. Specification J36-5245L is a modified 5245L that provides a 1-2-4-8 "1" state negative BCD code for all eight digits, decimal point assembly, and measurement units assembly.

5-11. Circuit diagrams for these specials are shown in Figures 5-1 and 5-2. Parts lists for the specials are listed in Tables 5-8 and 5-9.

5-12. Remote control operation is also available by special order. Programming information is covered in the Model 5245L Operating Manual, Paragraphs 3-14 through 3-17, page 3-11. Circuit diagram showing additional wiring is shown in Figure 5-3.

5-13. MANUAL CHANGES.

5-14. CURRENT INSTRUMENTS.

5-15. This manual applies directly to standard Model 5245L Electronic Counter having serial prefix number 628- (refer to Paragraph 1-6).

5-16. OLDER INSTRUMENTS.

5-17. This manual covers all instruments currently available with serial prefix 628-. As instrument changes are made and this manual is revised, backdating information to cover older instruments will be included in this section. For instruments with serial prefix numbers below 628-, see 5245L Operating and Service Manual prefixed 544-.

Table 5-4 Reference Designation Index (A18 Option 02)

Reference Designation	Stock No.	Description #	Note
A18	05245-6001	50 MC +1248 READOUT ASSEMBLY	
	05212-6014	READOUT BLOCK ASSY	
C1	0150-0093	C:FXD CER 0.01 UF +80-20% 100VDCW	
CR1	1901-0025	SEMICON DEVICE:DIODE JUNCTION	
CR2	1901-0025	SEMICON DEVICE:DIODE JUNCTION	
CR3	1901-0025	SEMICON DEVICE:DIODE JUNCTION	
CR4	1901-0025	SEMICON DEVICE:DIODE JUNCTION	
CR5	1901-0025	SEMICON DEVICE:DIODE JUNCTION	
CR6	1901-0025	SEMICON DEVICE:DIODE JUNCTION	
CR7	1901-0025	SEMICON DEVICE:DIODE JUNCTION	
CR8	1901-0025	SEMICON DEVICE:DIODE JUNCTION	
CR9 THRU			
CR10		NOT ASSIGNED	
CR11	1901-0025	SEMICON DEVICE:DIODE JUNCTION	
CR12	1901-0025	SEMICON DEVICE:DIODE JUNCTION	
CR13	1901-0025	SEMICON DEVICE:DIODE JUNCTION	
CR14	1901-0025	SEMICON DEVICE:DIODE JUNCTION	
CR15	1901-0025	SEMICON DEVICE:DIODE JUNCTION	
CR16	1901-0040	SEMICON DEVICE:DIODE SILICON	
CR17	1901-0040	SEMICON DEVICE:DIODE SILICON	
CR18 THRU			
CR23		NOT ASSIGNED	
CR24	1901-0025	SEMICON DEVICE:DIODE JUNCTION	
CR25	1902-0032	SEMICON DEVICE:DIODE SILICON JUNCTION	
DS1		NSR PART OF READOUT BLOCK ASSY	
DS2		NSR PART OF READOUT BLOCK ASSY	
DS3		NSR PART OF READOUT BLOCK ASSY	
DS4		NSR PART OF READOUT BLOCK ASSY	
DS5		NOT ASSIGNED	
DS6	1970-0009	ELECTRON TUBE INDICATOR 10 DIGIT	
Q1	1854-0003	TRANSISTOR NPN SILICON	
Q2	1854-0003	TRANSISTOR NPN SILICON	
Q3	1854-0003	TRANSISTOR NPN SILICON	
Q4	1854-0003	TRANSISTOR NPN SILICON	
Q5	1854-0003	TRANSISTOR NPN SILICON	
Q6	1854-0003	TRANSISTOR NPN SILICON	
Q7	1854-0003	TRANSISTOR NPN SILICON	
Q8	1854-0003	TRANSISTOR NPN SILICON	
Q9	1854-0003	TRANSISTOR NPN SILICON	
Q10	1854-0015	TRANSISTOR:NPN SILICON BVCBO 50V	
Q11	1854-0003	TRANSISTOR NPN SILICON	
R1	0686-4735	R:FXD COMP 47K OHM 5% 1/2W	
R2		NSR PART OF READOUT BLOCK ASSY	
R3 THRU			
R5		NOT ASSIGNED	
R6	0683-3945	R:FXD COMP 390K OHM 5% 1/4W	
R7	0683-3945	R:FXD COMP 390K OHM 5% 1/4W	
R8	0683-3945	R:FXD COMP 390K OHM 5% 1/4W	

Table 5-4. Reference Designation Index (A18 Option 02) Cont'd.

Reference Designation	Stock No.	Description #	Note
R9	0683-3945	R:FXD COMP 390K OHM 5% 1/4W	
R10	0683-5635	R:FXD COMP 56K OHM 5% 1/4W	
R11	0683-5635	R:FXD COMP 56K OHM 5% 1/4W	
R12	0683-5635	R:FXD COMP 56K OHM 5% 1/4W	
R13	0683-5635	R:FXD COMP 56K OHM 5% 1/4W	
R14	0683-5635	R:FXD COMP 56K OHM 5% 1/4W	
R15	0683-5635	R:FXD COMP 56K OHM 5% 1/4W	
R16	0683-5635	R:FXD COMP 56K OHM 5% 1/4W	
R17	0683-5635	R:FXD COMP 56K OHM 5% 1/4W	
R18	0683-2025	R:FXD COMP 2000 OHM 5% 1/4W	
R19	0683-7525	R:FXD COMP 7500 OHM 5% 1/4W	
R20	0683-1545	R:FXD COMP 150K OHM 5% 1/4W	
R21	0683-5135	R:FXD COMP 51K OHM 5% 1/4W	
R22	0683-6805	R:FXD COMP 68 OHM 5% 1/4W	
R23		NOT ASSIGNED	
R24	0683-7525	R:FXD COMP 7500 OHM 5% 1/4W	
R25		NOT ASSIGNED	
R26	0683-2025	R:FXD COMP 2000 OHM 5% 1/4W	
R27	0683-7525	R:FXD COMP 7500 OHM 5% 1/4W	
R28	0683-1545	R:FXD COMP 150K OHM 5% 1/4W	
R29	0683-5135	R:FXD COMP 51K OHM 5% 1/4W	
R30	0683-9105	R:FXD COMP 91 OHM 5% 1/4W	
R31		NOT ASSIGNED	
R32	0683-7525	R:FXD COMP 7500 OHM 5% 1/4W	
R33		NOT ASSIGNED	
R34	0683-2025	R:FXD COMP 2000 OHM 5% 1/4W	
R35	0683-7525	R:FXD COMP 7500 OHM 5% 1/4W	
R36	0683-1545	R:FXD COMP 150K OHM 5% 1/4W	
R37	0683-5135	R:FXD COMP 51K OHM 5% 1/4W	
R38	0683-9105	R:FXD COMP 91 OHM 5% 1/4W	
R39		NOT ASSIGNED	
R40	0683-7525	R:FXD COMP 7500 OHM 5% 1/4W	
R41		NOT ASSIGNED	
R42	0683-2025	R:FXD COMP 2000 OHM 5% 1/4W	
R43	0683-7525	R:FXD COMP 7500 OHM 5% 1/4W	
R44	0683-1545	R:FXD COMP 150K OHM 5% 1/4W	
R45	0683-5135	R:FXD COMP 51K OHM 5% 1/4W	
R46	0683-9105	R:FXD COMP 91 OHM 5% 1/4W	
R47		NOT ASSIGNED	
R48	0683-7525	R:FXD COMP 7500 OHM 5% 1/4W	
R49 THRU			
R50		NOT ASSIGNED	
R51	0683-4735	R:FXD COMP 47K OHM 5% 1/4W	
R52	0683-4735	R:FXD COMP 47K OHM 5% 1/4W	
R53	0683-4735	R:FXD COMP 47K OHM 5% 1/4W	
R54	0683-4735	R:FXD COMP 47K OHM 5% 1/4W	
R55	0683-4735	R:FXD COMP 47K OHM 5% 1/4W	
R56	0683-1245	R:FXD COMP 120K OHM 5% 1/4W	
R57 THRU			
R61		NOT ASSIGNED	
R62	0683-4735	R:FXD COMP 47K OHM 5% 1/4W	

Table 5-4. Reference Designation Index (A18 Option 02) Cont'd.

Reference Designation	℗ Stock No.	Description #	Note
R63		NOT ASSIGNED	
R64	0683-7525	R:FXD COMP 7500 OHM 5% 1/4W	
R65	0683-7525	R:FXD COMP 7500 OHM 5% 1/4W	
R66	0683-7545	R:FXD COMP 750K OHM 5% 1/4W	
R67	0683-7525	R:FXD COMP 7500 OHM 5% 1/4W	
R68	0683-1045	R:FXD COMP 100K OHM 5% 1/4W	
R69	0683-1045	R:FXD COMP 100K OHM 5% 1/4W	
R70	0683-1045	R:FXD COMP 100K OHM 5% 1/4W	
R71	0683-1535	R:FXD COMP 15K OHM 5% 1/4W	
R72	0683-2735	R:FXD COMP 27K OHM 5% 1/4W	
R73	0683-3335	R:FXD COMP 33K OHM 5% 1/4W	
R74	0683-2735	R:FXD COMP 27K OHM 5% 1/4W	
R75	0683-2735	R:FXD COMP 27K OHM 5% 1/4W	
R76	0683-2735	R:FXD COMP 27K OHM 5% 1/4W	
R77	0683-1835	R:FXD COMP 18K OHM 5% 1/4W	
V1		NSR PART OF READOUT BLOCK ASSY	

Table 5-5. Reference Designation Index (A18 Option 03)

Reference Designation	Stock No.	Description #	Note
A18	05245-6003 05212-6014	-1248 READOUT ASSY READOUT BLOCK ASSY	
C1 THRU C2		NOT ASSIGNED	
C3	0150-0093	C:FXD CER 0.01 UF +80-20% 100VDCW	
CR1	1901-0025	DIODE JUNCTION:100 MA AT 1V 100PIV	
CR2	1901-0025	SEMICON DEVICE:DIODE JUNCTION	
CR3	1901-0025	SEMICON DEVICE:DIODE JUNCTION	
CR4	1901-0025	SEMICON DEVICE:DIODE JUNCTION	
CR5	1901-0025	SEMICON DEVICE:DIODE JUNCTION	
CR6	1901-0025	SEMICON DEVICE:DIODE JUNCTION	
CR7	1901-0025	SEMICON DEVICE:DIODE JUNCTION	
CR8	1901-0025	SEMICON DEVICE:DIODE JUNCTION	
CR9 THRU CR10		NOT ASSIGNED	
CR11	1901-0025	SEMICON DEVICE:DIODE JUNCTION	
CR12	1901-0025	SEMICON DEVICE:DIODE JUNCTION	
CR13	1901-0025	SEMICON DEVICE:DIODE JUNCTION	
CR14	1901-0025	SEMICON DEVICE:DIODE JUNCTION	
CR15	1901-0025	SEMICON DEVICE:DIODE JUNCTION	
CR16	1901-0040	SEMICON DEVICE:DIODE SILICON	
CR17	1901-0040	SEMICON DEVICE:DIODE SILICON	
CR18	1901-0025	SEMICON DEVICE:DIODE JUNCTION	
CR19	1902-0032	SEMICON DEVICE:DIODE SILICON JUNCTION	
DS1		NSR:PART OF READOUT BLOCK ASSY	
DS2		NSR:PART OF READOUT BLOCK ASSY	
DS3		NSR:PART OF READOUT BLOCK ASSY	
DS4		NSR:PART OF READOUT BLOCK ASSY	
DS5		NOT ASSIGNED	
DS6	1970-0009	ELECTRON TUBE INDICATOR 10 DIGIT	
Q1	1854-0003	TRANSISTOR NPN SILICON	
Q2	1854-0003	TRANSISTOR NPN SILICON	
Q3	1854-0003	TRANSISTOR NPN SILICON	
Q4	1854-0003	TRANSISTOR NPN SILICON	
Q5	1854-0003	TRANSISTOR NPN SILICON	
Q6	1854-0003	TRANSISTOR NPN SILICON	
Q7	1854-0003	TRANSISTOR NPN SILICON	
Q8	1854-0003	TRANSISTOR NPN SILICON	
Q9	1854-0015	TRANSISTOR:NPN SILICON BVCBO 50V	
Q10	1854-0015	TRANSISTOR:NPN SILICON BVCBO 50V	
Q11	1854-0003	TRANSISTOR NPN SILICON	
R1	0686-4735	R:FXD COMP 47K OHM 5% 1/2W	
R2		NSR:PART OF READOUT BLOCK ASSY	
R3 THRU R5		NOT ASSIGNED	
R6	0683-3945	R:FXD COMP 390K OHM 5% 1/4W	
R7	0683-3945	R:FXD COMP 390K OHM 5% 1/4W	
R8	0683-3945	R:FXD COMP 390K OHM 5% 1/4W	

Table 5-5. Reference Designation Index (A18 Option 03) Cont'd.

Reference Designation	Stock No.	Description #	Note
R9	0683-3945	R:FXD COMP 390K OHM 5% 1/4W	
R10	0683-5635	R:FXD COMP 56K OHM 5% 1/4W	
R11	0683-5635	R:FXD COMP 56K OHM 5% 1/4W	
R12	0683-5635	R:FXD COMP 56K OHM 5% 1/4W	
R13	0683-5635	R:FXD COMP 56K OHM 5% 1/4W	
R14	0683-5635	R:FXD COMP 56K OHM 5% 1/4W	
R15	0683-5635	R:FXD COMP 56K OHM 5% 1/4W	
R16	0683-5635	R:FXD COMP 56K OHM 5% 1/4W	
R17	0683-5635	R:FXD COMP 56K OHM 5% 1/4W	
R18	0683-2025	R:FXD COMP 2000 OHM 5% 1/4W	
R19	0683-7525	R:FXD COMP 7500 OHM 5% 1/4W	
R20	0683-1545	R:FXD COMP 150K OHM 5% 1/4W	
R21	0683-5135	R:FXD COMP 51K OHM 5% 1/4W	
R22	0683-6805	R:FXD COMP 68 OHM 5% 1/4W	
R23		NOT ASSIGNED	
R24	0683-7525	R:FXD COMP 7500 OHM 5% 1/4W	
R25		NOT ASSIGNED	
R26	0683-2025	R:FXD COMP 2000 OHM 5% 1/4W	
R27	0683-7525	R:FXD COMP 7500 OHM 5% 1/4W	
R28	0683-1545	R:FXD COMP 150K OHM 5% 1/4W	
R29	0683-5135	R:FXD COMP 51K OHM 5% 1/4W	
R30	0683-9105	R:FXD COMP 91 OHM 5% 1/4W	
R31		NOT ASSIGNED	
R32	0683-7525	R:FXD COMP 7500 OHM 5% 1/4W	
R33		NOT ASSIGNED	
R34	0683-2025	R:FXD COMP 2000 OHM 5% 1/4W	
R35	0683-7525	R:FXD COMP 7500 OHM 5% 1/4W	
R36	0683-1545	R:FXD COMP 150K OHM 5% 1/4W	
R37	0683-5135	R:FXD COMP 51K OHM 5% 1/4W	
R38	0683-9105	R:FXD COMP 91 OHM 5% 1/4W	
R39		NOT ASSIGNED	
R40	0683-7525	R:FXD COMP 7500 OHM 5% 1/4W	
R41		NOT ASSIGNED	
R42	0683-2025	R:FXD COMP 2000 OHM 5% 1/4W	
R43	0683-7525	R:FXD COMP 7500 OHM 5% 1/4W	
R44	0683-1545	R:FXD COMP 150K OHM 5% 1/4W	
R45	0683-5135	R:FXD COMP 51K OHM 5% 1/4W	
R46	0683-9105	R:FXD COMP 91 OHM 5% 1/4W	
R47		NOT ASSIGNED	
R48	0683-7525	R:FXD COMP 7500 OHM 5% 1/4W	
R49 THRU			
R50		NOT ASSIGNED	
R51	0683-4735	R:FXD COMP 47K OHM 5% 1/4W	
R52	0683-8235	R:FXD COMP 82K OHM 5% 1/4W	
R53	0683-8235	R:FXD COMP 82K OHM 5% 1/4W	
R54	0683-4735	R:FXD COMP 47K OHM 5% 1/4W	
R55	0683-2735	R:FXD COMP 27K OHM 5% 1/4W	
R56	0683-1245	R:FXD COMP 120K OHM 5% 1/4W	
R57	0683-2735	R:FXD COMP 27K OHM 5% 1/4W	
R58	0683-1035	R:FXD COMP 10K OHM 5% 1/4W	
R59	0683-1035	R:FXD COMP 10K OHM 5% 1/4W	

Table 5-5. Reference Designation Index (A18 Option 03) Cont'd.

Reference Designation	℗ Stock No.	Description #	Note
R60	0683-1245	R:FXD COMP 120K OHM 5% 1/4W	
R61	0683-1045	R:FXD COMP 100K OHM 5% 1/4W	
R62		NOT ASSIGNED	
R63	0683-1045	R:FXD COMP 100K OHM 5% 1/4W	
R64	0683-7525	R:FXD COMP 7500 OHM 5% 1/4W	
R65	0683-7525	R:FXD COMP 7500 OHM 5% 1/4W	
R66	0683-7545	R:FXD COMP 750K OHM 5% 1/4W	
R67	0683-7525	R:FXD COMP 7500 OHM 5% 1/4W	
R68	0683-1045	R:FXD COMP 100K OHM 5% 1/4W	
R69	0683-1045	R:FXD COMP 100K OHM 5% 1/4W	
R70	0683-1045	R:FXD COMP 100K OHM 5% 1/4W	
R71	0683-1535	R:FXD COMP 15K OHM 5% 1/4W	
V1		NSR PART OF READOUT BLOCK ASSY	

Table 5-6. Reference Designation Index (A15, A16 Options 02 & 03)

Reference Designation	℗ Stock No.	Description #	Note
A15-A16	05232-6002	ASSY:DECIMAL COUNTER +1248	
	05232-6003	ASSY:DECIMAL COUNTER -1248	
	05212-6014	READOUT BLOCK ASSY	
C1	0140-0203	C:FXD MICA 30PF 5% 500VDCW	
C2	0160-0178	C:FXD MICA 27PF 5% 300VDCW	
C3	0140-0191	C:FXD MICA 56 PF 5% 300 VDCW	
C4	0150-0023	C:FXD CER 2000 PF 20% 1000VDCW	
C5	0140-0203	C:FXD MICA 30PF 5% 500VDCW	
C6	0160-0179	C:FXD MICA 33PF 5% 300VDCW	
C7	0160-0178	C:FXD MICA 27PF 5% 300VDCW	
C8	0150-0023	C:FXD CER 2000 PF 20% 1000VDCW	
C9	0160-0196	C:FXD MICA 24PF 5% 300VDCW	
C10	0140-0145	C:FXD MICA 22 PF 5% 500 VDCW	
C11	0140-0214	C:FXD MICA 60PF 5% 300VDCW	
C12	0140-0214	C:FXD MICA 60PF 5% 300VDCW	
C13	0140-0204	C:FXD MICA 47PF 5% NPO 500VDCW	
C14	0140-0214	C:FXD MICA 60PF 5% 300VDCW	
C15	0140-0219	C:FXD MICA 180 PF 2% 300VDCW	
CR1	1901-0025	SEMICON DEVICE:DIODE JUNCTION	
CR2	1901-0025	SEMICON DEVICE:DIODE JUNCTION	
CR3	1901-0025	SEMICON DEVICE:DIODE JUNCTION	
CR4	1901-0025	SEMICON DEVICE:DIODE JUNCTION	
CR5	1901-0025	SEMICON DEVICE:DIODE JUNCTION	
CR6	1901-0025	SEMICON DEVICE:DIODE JUNCTION	
CR7	1901-0025	SEMICON DEVICE:DIODE JUNCTION	
CR8	1901-0025	SEMICON DEVICE:DIODE JUNCTION	
CR9	1901-0040	SEMICON DEVICE:DIODE SILICON	
CR10	1901-0040	SEMICON DEVICE:DIODE SILICON	
CR11	1901-0040	SEMICON DEVICE:DIODE SILICON	
CR12	1901-0040	SEMICON DEVICE:DIODE SILICON	
CR13	1901-0040	SEMICON DEVICE:DIODE SILICON	
CR14	1901-0040	SEMICON DEVICE:DIODE SILICON	
CR15	1901-0040	SEMICON DEVICE:DIODE SILICON	
CR16	1901-0040	SEMICON DEVICE:DIODE SILICON	
CR17	1901-0040	SEMICON DEVICE:DIODE SILICON	
CR18	1901-0040	SEMICON DEVICE:DIODE SILICON	
CR19	1901-0040	SEMICON DEVICE:DIODE SILICON	
CR20	1901-0040	SEMICON DEVICE:DIODE SILICON	
CR21	1901-0040	SEMICON DEVICE:DIODE SILICON	
CR22	1901-0040	SEMICON DEVICE:DIODE SILICON	
CR23	1901-0040	SEMICON DEVICE:DIODE SILICON	
CR24	1901-0040	SEMICON DEVICE:DIODE SILICON	
CR25	1901-0040	SEMICON DEVICE:DIODE SILICON	
CR26	1901-0040	SEMICON DEVICE:DIODE SILICON	
DS1		NSR PART OF READOUT BLOCK ASSY	
DS2		NSR PART OF READOUT BLOCK ASSY	
DS3		NSR PART OF READOUT BLOCK ASSY	
DS4		NSR PART OF READOUT BLOCK ASSY	
DS5		NOT ASSIGNED	

Table 5-6. Reference Designation Index (A15, A16 Options 02 & 03) Cont'd.

Reference Designation	Stock No.	Description #	Note
DS6	1970-0009	ELECTRON TUBE INDICATOR 10 DIGIT	
Q1	1853-0009	TRANSISTOR:SILICON PNP	
Q2	1853-0009	TRANSISTOR:SILICON PNP	
Q3	1853-0009	TRANSISTOR:SILICON PNP	
Q4	1853-0009	TRANSISTOR:SILICON PNP	
Q5	1853-0009	TRANSISTOR:SILICON PNP	
Q6	1853-0009	TRANSISTOR:SILICON PNP	
Q7	1853-0009	TRANSISTOR:SILICON PNP	
Q8	1853-0009	TRANSISTOR:SILICON PNP	
R1	0686-4735	R:FXD COMP 47K OHM 5% 1/2W	
R2		NSR PART OF READOUT BLOCK ASSY	
R3 THRU			
R5		NOT ASSIGNED	
R6	0683-3945	R:FXD COMP 390K OHMS 5% 1/4W	
R7	0683-3945	R:FXD COMP 390K OHMS 5% 1/4W	
R8	0683-3945	R:FXD COMP 390K OHMS 5% 1/4W	
R9	0683-3945	R:FXD COMP 390K OHMS 5% 1/4W	
R10	0683-5635	R:FXD COMP 56K OHMS 5% 1/4W	
R11	0683-5635	R:FXD COMP 56K OHMS 5% 1/4W	
R12	0683-5635	R:FXD COMP 56K OHMS 5% 1/4W	
R13	0683-5635	R:FXD COMP 56K OHMS 5% 1/4W	
R14	0683-5635	R:FXD COMP 56K OHMS 5% 1/4W	
R15	0683-5635	R:FXD COMP 56K OHMS 5% 1/4W	
R16	0683-5635	R:FXD COMP 56K OHMS 5% 1/4W	
R17	0683-5635	R:FXD COMP 56K OHMS 5% 1/4W	
R18	0683-9115	R:FXD COMP 910 OHM 5% 1/4W	
R19	0758-0043	R:FXD MET FLM 1800 OHM 5% 1/2W	
R20	0683-1235	R:FXD COMP 12K OHM 5% 1/4W	
R21	0683-1825	R:FXD COMP 1800 OHMS 5% 1/4W	
R22	0683-1635	R:FXD COMP 16K OHMS 5% 1/4W	
R23	0683-1215	R:FXD COMP 120 OHM 5% 1/4W	
R24	0683-1045	R:FXD COMP 100K OHM 5% 1/4W	
R25	0758-0043	R:FXD MET FLM 1800 OHM 5% 1/2W	
R26	0683-1235	R:FXD COMP 12K OHM 5% 1/4W	
R27	0683-1825	R:FXD COMP 1800 OHMS 5% 1/4W	
R28	0683-4325	R:FXD COMP 4300 OHM 5% 1/4W	
R29	0758-0043	R:FXD MET FLM 1800 OHM 5% 1/2W	
R30	0683-1235	R:FXD COMP 12K OHM 5% 1/4W	
R31	0683-1825	R:FXD COMP 1800 OHMS 5% 1/4W	
R32	0683-1635	R:FXD COMP 16K OHMS 5% 1/4W	
R33	0683-1215	R:FXD COMP 120 OHM 5% 1/4W	
R34	0683-1045	R:FXD COMP 100K OHM 5% 1/4W	
R35	0758-0043	R:FXD MET FLM 1800 OHM 5% 1/2W	
R36	0683-1235	R:FXD COMP 12K OHM 5% 1/4W	
R37	0683-1825	R:FXD COMP 1800 OHMS 5% 1/4W	
R38	0683-1825	R:FXD COMP 1800 OHMS 5% 1/4W	
R39	0758-0043	R:FXD MET FLM 1800 OHM 5% 1/2W	
R40	0683-1235	R:FXD COMP 12K OHM 5% 1/4W	
R41	0683-1635	R:FXD COMP 16K OHMS 5% 1/4W	
R42	0683-1015	R:FXD COMP 100 OHM 5% 1/4W	

Table 5-6. Reference Designation Index (A15, A16 Options 02 & 03) Cont'd.

Reference Designation	Stock No.	Description #	Note
R43	0683-1045	R:FXD COMP 100K OHM 5% 1/4W	
R44	0758-0043	R:FXD MET FLM 1800 OHM 5% 1/2W	
R45	0683-1235	R:FXD COMP 12K OHM 5% 1/4W	
R46	0683-1825	R:FXD COMP 1800 OHMS 5% 1/4W	
R47	0683-1825	R:FXD COMP 1800 OHMS 5% 1/4W	
R48	0758-0043	R:FXD MET FLM 1800 OHM 5% 1/2W	
R49	0683-1235	R:FXD COMP 12K OHM 5% 1/4W	
R50	0683-1515	R:FXD COMP 150 OHM 5% 1/4W	
R51	0683-1335	R:FXD COMP 13K OHM 5% 1/4W	
R52	0683-1015	R:FXD COMP 100 OHM 5% 1/4W	
R53	0683-1045	R:FXD COMP 100K OHM 5% 1/4W	
R54	0683-1025	R:FXD COMP 1000 OHM 5% 1/4W	
R55	0758-0043	R:FXD MET FLM 1800 OHM 5% 1/2W	
R56	0683-1825	R:FXD COMP 1800 OHMS 5% 1/4W	
R57	0683-3325	R:FXD COMP 3300 OHM 5% 1/4W	
R58	0683-5125	R:FXD COMP 5100 OHM 5% 1/4W	
V1		NSR PART OF READOUT BLOCK ASSY	

Table 5-7. Reference Designation Index (A10-A14 Options 02 & 03)

Reference Designation	℗ Stock No.	Description #	Note
A10-A14	05212-6002	+1248 DECIMAL COUNTER ASSY	
	05212-6003	+1248 DECIMAL COUNTER ASSY	
	05212-6014	READOUT BLOCK ASSEMBLY	
C1	0140-0194	C:FXD MICA 110 PF 5% 300 VDCW	
C2	0140-0217	C:FXD MICA 140PF 2% 300VDCW	
C3	0140-0194	C:FXD MICA 110 PF 5% 300 VDCW	
C4	0140-0197	C:FXD MICA 180 PF 5% 300 VDCW	
C5	0140-0194	C:FXD MICA 110 PF 5% 300 VDCW	
C6	0140-0194	C:FXD MICA 110 PF 5% 300 VDCW	
C7	0140-0195	C:FXD MICA 130 PF 5% 300 VDCW	
C8	0140-0194	C:FXD MICA 110 PF 5% 300 VDCW	
C9	0140-0194	C:FXD MICA 110 PF 5% 300 VDCW	
C10	0140-0196	C:FXD MICA 150 PF 5% 300 VDCW	
C11	0140-0198	C:FXD MICA 200PF 5% 300VDCW	
C12	0140-0198	C:FXD MICA 200PF 5% 300VDCW	
C13	0150-0121	C:FXD CER 0.1UF 50 VDCW	
CR1	1901-0025	SEMICON DEVICE:DIODE JUNCTION	
CR2	1901-0025	SEMICON DEVICE:DIODE JUNCTION	
CR3	1901-0025	SEMICON DEVICE:DIODE JUNCTION	
CR4	1901-0025	SEMICON DEVICE:DIODE JUNCTION	
CR5	1901-0025	SEMICON DEVICE:DIODE JUNCTION	
CR6	1901-0025	SEMICON DEVICE:DIODE JUNCTION	
CR7	1901-0025	SEMICON DEVICE:DIODE JUNCTION	
CR8	1901-0025	SEMICON DEVICE:DIODE JUNCTION	
CR9	1910-0016	SEMICON DEVICE:DIODE GERMANIUM	
CR10	1910-0016	SEMICON DEVICE:DIODE GERMANIUM	
CR11	1910-0016	SEMICON DEVICE:DIODE GERMANIUM	
CR12	1910-0016	SEMICON DEVICE:DIODE GERMANIUM	
CR13	1910-0016	SEMICON DEVICE:DIODE GERMANIUM	
CR14	1910-0016	SEMICON DEVICE:DIODE GERMANIUM	
DS1		NSR:PART OF READOUT BLOCK ASSY	
DS2		NSR:PART OF READOUT BLOCK ASSY	
DS3		NSR:PART OF READOUT BLOCK ASSY	
DS4		NSR:PART OF READOUT BLOCK ASSY	
DS5		NOT ASSIGNED	
DS6	1970-0009	ELECTRON TUBE INDICATOR 10 DIGIT	
L1	9140-0161	COIL:FXD 3600UH 5%	
Q1	1850-0062	TRAN$ISTOR GERMANIUM PNP SELECTED	
Q2	1850-0062	TRAN$ISTOR GERMANIUM PNP SELECTED	
Q3	1850-0062	TRAN$ISTOR GERMANIUM PNP SELECTED	
Q4	1850-0062	TRAN$ISTOR GERMANIUM PNP SELECTED	
Q5	1850-0062	TRAN$ISTOR GERMANIUM PNP SELECTED	
Q6	1850-0062	TRAN$ISTOR GERMANIUM PNP SELECTED	
Q7	1850-0062	TRAN$ISTOR GERMANIUM PNP SELECTED	
Q8	1850-0062	TRAN$ISTOR GERMANIUM PNP SELECTED	
R1	0686-4735	R:FXD COMP 47K OHM 5% 1/2W	
R2		NSR:PART OF READOUT BLOCK ASSY	

Table 5-7. Reference Designation Index (A10-A14 Options 02 & 03) Cont'd.

Reference Designation	Stock No.	Description #	Note
R3 THRU R5		NOT ASSIGNED	
R6	0683-3945	R:FXD COMP 390K OHM 5% 1/4W	
R7	0683-3945	R:FXD COMP 390K OHM 5% 1/4W	
R8	0683-3945	R:FXD COMP 390K OHM 5% 1/4W	
R9	0683-3945	R:FXD COMP 390K OHM 5% 1/4W	
R10	0683-5635	R:FXD COMP 56K OHM 5% 1/4W	
R11	0683-5635	R:FXD COMP 56K OHM 5% 1/4W	
R12	0683-5635	R:FXD COMP 56K OHM 5% 1/4W	
R13	0683-5635	R:FXD COMP 56K OHM 5% 1/4W	
R14	0683-5635	R:FXD COMP 56K OHM 5% 1/4W	
R15	0683-5635	R:FXD COMP 56K OHM 5% 1/4W	
R16	0683-5635	R:FXD COMP 56K OHM 5% 1/4W	
R17	0683-5635	R:FXD COMP 56K OHM 5% 1/4W	
R18	0686-7525	R:FXD COMP 7500 OHM 5% 1/2W	
R19	0683-4335	R:FXD COMP 43K OHM 5% 1/4W	
R20	0683-1035	R:FXD COMP 10K OHM 5% 1/4W	
R21	0683-4735	R:FXD COMP 47K OHM 5% 1/4W	
R22	0683-3925	R:FXD COMP 3900 OHM 5% 1/4W	
R23	0683-1815	R:FXD COMP 180 OHM 5% 1/4W	
R24	0683-1045	R:FXD COMP 100K OHM 5% 1/4W	
R25	0683-3925	R:FXD COMP 3900 OHM 5% 1/4W	
R26	0686-7525	R:FXD COMP 7500 OHM 5% 1/2W	
R27	0683-4335	R:FXD COMP 43K OHM 5% 1/4W	
R28	0683-1035	R:FXD COMP 10K OHM 5% 1/4W	
R29	0683-1035	R:FXD COMP 10K OHM 5% 1/4W	
R30	0686-7525	R:FXD COMP 7500 OHM 5% 1/2W	
R31	0683-4335	R:FXD COMP 43K OHM 5% 1/4W	
R32	0683-4735	R:FXD COMP 47K OHM 5% 1/4W	
R33	0683-3925	R:FXD COMP 3900 OHM 5% 1/4W	
R34	0683-1815	R:FXD COMP 180 OHM 5% 1/4W	
R35	0683-1045	R:FXD COMP 100K OHM 5% 1/4W	
R36	0683-3925	R:FXD COMP 3900 OHM 5% 1/4W	
R37	0686-7525	R:FXD COMP 7500 OHM 5% 1/2W	
R38	0683-4335	R:FXD COMP 43K OHM 5% 1/4W	
R39	0683-1035	R:FXD COMP 10K OHM 5% 1/4W	
R40	0683-1035	R:FXD COMP 10K OHM 5% 1/4W	
R41	0686-7525	R:FXD COMP 7500 OHM 5% 1/2W	
R42	0683-4335	R:FXD COMP 43K OHM 5% 1/4W	
R43	0683-4735	R:FXD COMP 47K OHM 5% 1/4W	
R44	0683-3925	R:FXD COMP 3900 OHM 5% 1/4W	
R45	0683-1815	R:FXD COMP 180 OHM 5% 1/4W	
R46	0683-1045	R:FXD COMP 100K OHM 5% 1/4W	
R47	0683-3925	R:FXD COMP 3900 OHM 5% 1/4W	
R48	0686-7525	R:FXD COMP 7500 OHM 5% 1/2W	
R49	0683-4335	R:FXD COMP 43K OHM 5% 1/4W	
R50	0683-1035	R:FXD COMP 10K OHM 5% 1/4W	
R51	0683-1035	R:FXD COMP 10K OHM 5% 1/4W	
R52	0686-7525	R:FXD COMP 7500 OHM 5% 1/2W	
R53	0683-4335	R:FXD COMP 43K OHM 5% 1/4W	
R54	0683-4735	R:FXD COMP 47K OHM 5% 1/4W	

Table 5-7. Reference Designation Index (A10-A14 Options 02 & 03) Cont'd.

Reference Designation	Stock No.	Description #	Note
R55	0683-3925	R:FXD COMP 3900 OHM 5% 1/4W	
R56	0683-1815	R:FXD COMP 180 OHM 5% 1/4W	
R57	0683-1045	R:FXD COMP 100K OHM 5% 1/4W	
R58	0683-3925	R:FXD COMP 3900 OHM 5% 1/4W	
R59	0686-7525	R:FXD COMP 7500 OHM 5% 1/2W	
R60	0683-4335	R:FXD COMP 43K OHM 5% 1/4W	
R61	0683-1035	R:FXD COMP 10K OHM 5% 1/4W	
R62	0683-7525	R:FXD COMP 7500 OHM 5% 1/4W	
R63	0683-4725	R:FXD COMP 4700 OHM 5% 1/4W	
R64	0683-4335	R:FXD COMP 43K OHM 5% 1/4W	
V1		NSR:PART OF READOUT BLOCK ASSY	

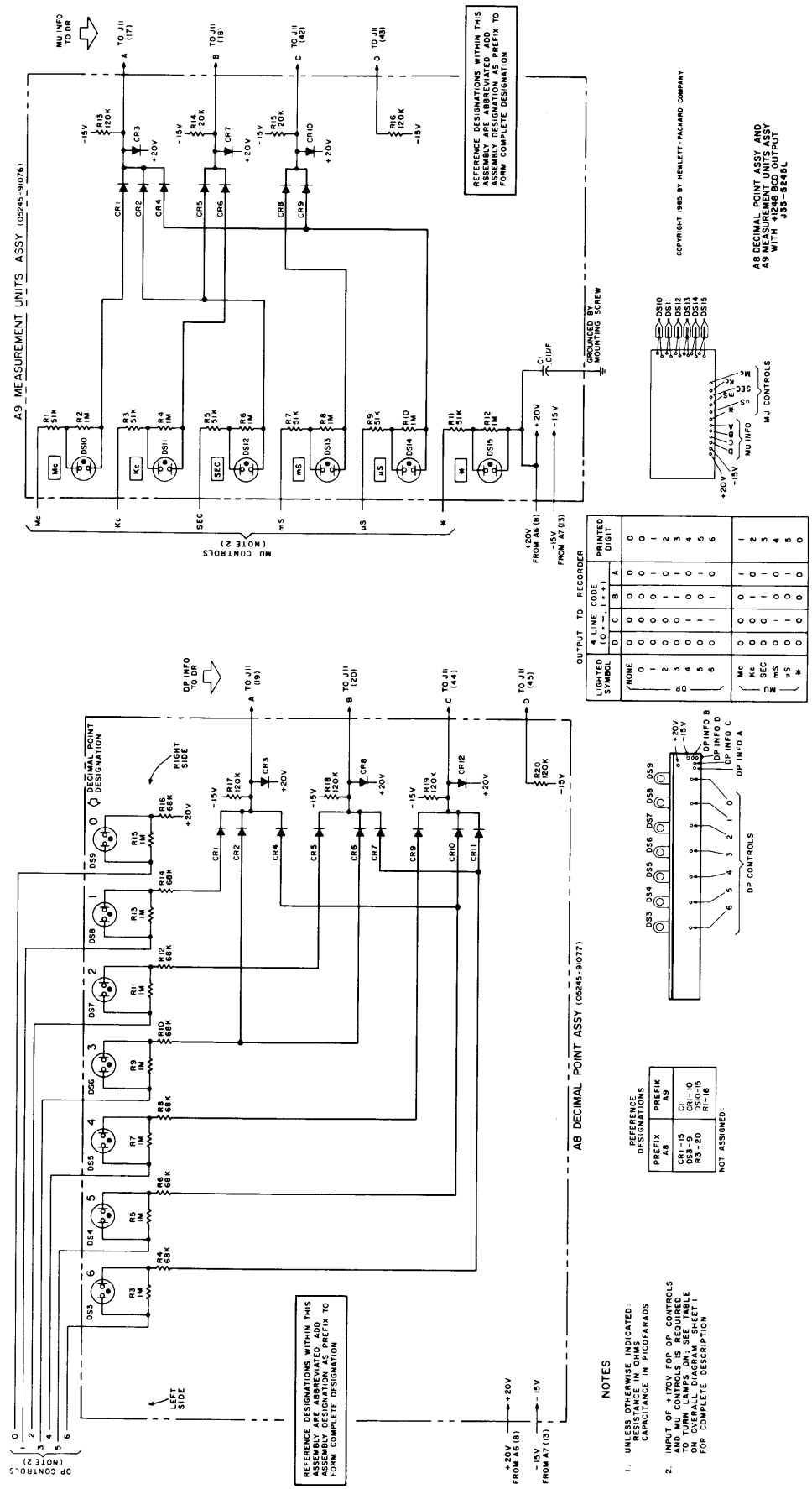

Figure 5-1. DP and MU with +1248 BCD Output (J35-5245L Special)

Table 5-8. Reference Designation Index (J35-5245L)

Reference Designation	℗ Stock No.	Description #	Note
A8	05245-91077	Assembly: decimal lights, with +1248 BCD output	
A8CR1 thru A8CR12	1901-0025	Semicon Device: diode junction, silicon	
A8DS1, A8DS2		Not assigned	
A8DS3 thru A8DS9	2140-0028	Lamp: glow, 1/15W	
A8R1		Not assigned	
A8R2		Not assigned	
A8R3	0683-1055	R: fxd, comp, 1 megohm 5%, 1/4W	
A8R4	0683-0835	R: fxd, comp, 68K ohms 5%, 1/4W	
A8R5	0683-1055	R: fxd, comp, 1 megohm 5%, 1/4W	
A8R6	0683-6835	R: fxd, comp, 68K ohms 5%, 1/4W	
A8R7	0683-1055	R: fxd, comp, 1 megohm 5%, 1/4W	
A8R8	0683-6835	R: fxd, comp, 68K ohms 5%, 1/4W	
A8R9	0683-1055	R: fxd, comp, 1 megohm 5%, 1/4W	
A8R10	0683-6835	R: fxd, comp, 68K ohms 5%, 1/4W	
A8R11	0683-1055	R: fxd, comp, 1 megohm 5%, 1/4W	
A8R12	0683-6835	R: fxd, comp, 68K ohms 5%, 1/4W	
A8R13	0683-1055	R: fxd, comp, 1 megohm 5%, 1/4W	
A8R14	0683-6835	R: fxd, comp, 68K ohms 5%, 1/4W	
A8R15	0683-1055	R: fxd, comp, 1 megohm 5%, 1/4W	
A8R16	0683-6835	R: fxd, comp, 68K ohms 5%, 1/4W	
A8R17	0683-1245	R: fxd, comp, 120K ohms 5%, 1/4W	
A8R18	0683-1245	R: fxd, comp, 120K ohms 5%, 1/4W	
A8R19	0683-1245	R: fxd, comp, 120K ohms 5%, 1/4W	
A8R20	0683-1245	R: fxd, comp, 120K ohms 5%, 1/4W	
A9	05245-91076	Assembly: measurement units, with +1248 BCD output	
A9C1	0150-0012	C: fxd, cer, 0.01 μf 20%, 1000 vdcw	
A9CR1 thru A9CR10	1901-0025	Semicon Device: diode junction, silicon	
A9DS1 thru A9DS9		Not assigned	
A9DS10 thru A9DS15	2140-0015	Lamp: glow, neon, NE2E	
A9R1	0683-5135	R: fxd, comp, 51K ohms 5%, 1/4W	
A9R2	0683-1055	R: fxd, comp, 1 megohm 5%, 1/4W	
A9R3	0683-5135	R: fxd, comp, 51K ohms 5%, 1/4W	
A9R4	0683-1055	R: fxd, comp, 1 megohm 5%, 1/4W	
A9R5	0683-5135	R: fxd, comp, 51K ohms 5%, 1/4W	
A9R6	0683-1055	R: fxd, comp, 1 megohm 5%, 1/4W	
A9R7	0683-5135	R: fxd, comp, 51K ohms 5%, 1/4W	
A9R8	0683-1055	R: fxd, comp, 1 megohm 5%, 1/4W	
A9R9	0683-5135	R: fxd, comp, 51K ohms 5%, 1/4W	
A9R10	0683-1055	R: fxd, comp, 1 megohm 5%, 1/4W	
A9R11	0683-5135	R: fxd, comp, 51K ohms 5%, 1/4W	
A9R12	0683-1055	R: fxd, comp, 1 megohm 5%, 1/4W	
A9R13	0683-1245	R: fxd, comp, 120K ohms 5%, 1/4W	
A9R14	0683-1245	R: fxd, comp, 120K ohms 5%, 1/4W	
A9R15	0683-1245	R: fxd, comp, 120K ohms 5%, 1/4W	
A9R16	0683-1245	R: fxd, comp, 120K ohms 5%, 1/4W	

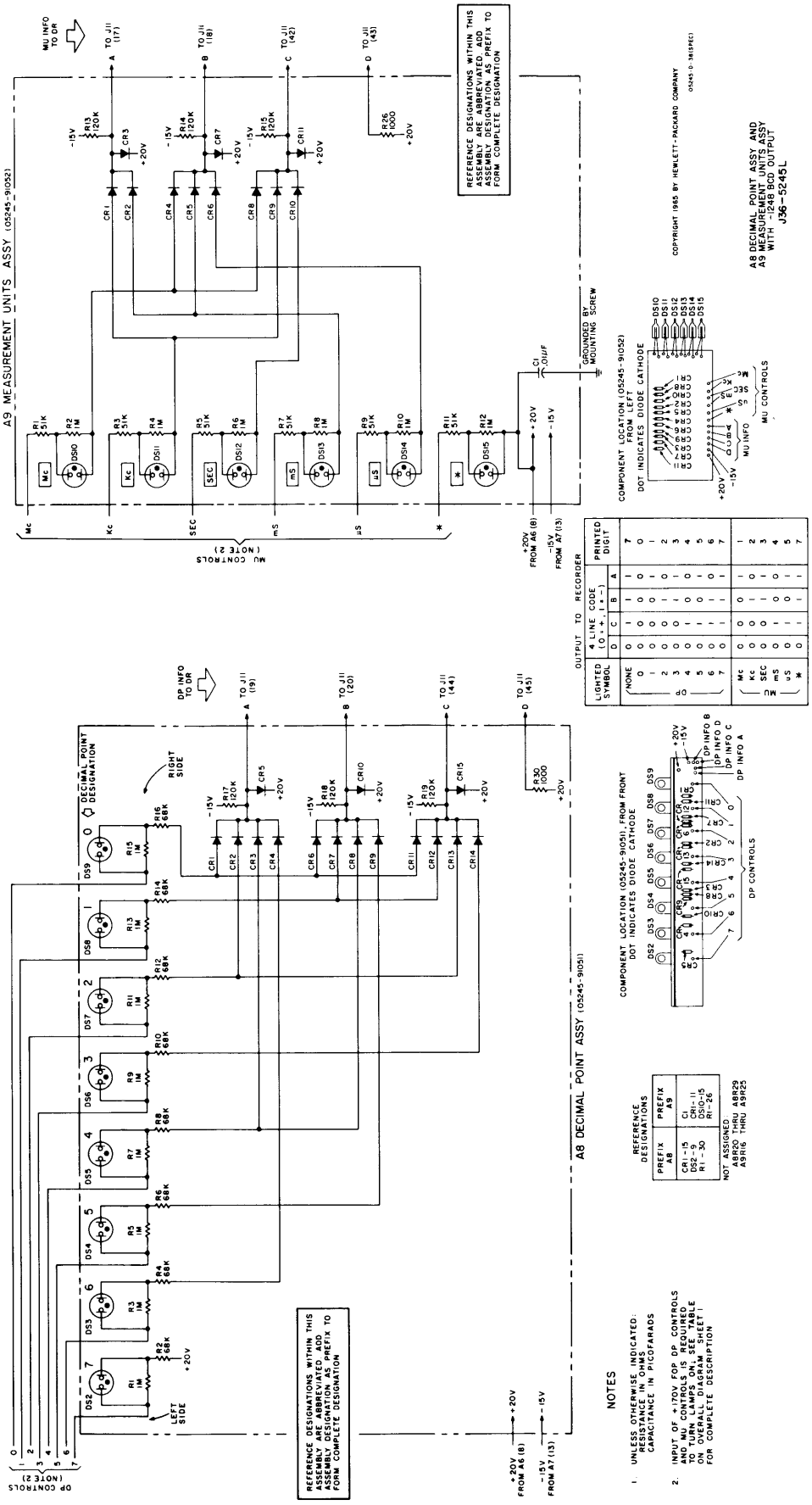

Figure 5-2. DP and MU with -1248 BCD Output (J36-5245L Special)

Table 5-9. Reference Designation Index (J36-5245L)

Reference Designation	℗ Stock No.	Description #	Note
A8	05245-91051	Assembly: decimal lights, with -1248 BCD output	
A8CR1 thru A8CR15	1901-0025	Semicon Device: diode junction, silicon	
A8DS1		Not assigned	
A8DS2	2140-0028	Lamp: glow, 1/15W	
A8R1	0683-1055	R: fxd, comp, 1 megohm 5%, 1/4W	
A8R2	0683-6835	R: fxd, comp, 68K ohms 5%, 1/4W	
A8R3	0683-1055	R: fxd, comp, 1 megohm 5%, 1/4W	
A8R4	0683-6835	R: fxd, comp, 68K ohms 5%, 1/4W	
A8R5	0683-1055	R: fxd, comp, 1 megohm 5%, 1/4W	
A8R6	0683-6835	R: fxd, comp, 68K ohms 5%, 1/4W	
A8R7	0683-1055	R: fxd, comp, 1 megohm 5%, 1/4W	
A8R8	0683-6835	R: fxd, comp, 68K ohms 5%, 1/4W	
A8R9	0683-1055	R: fxd, comp, 1 megohm 5%, 1/4W	
A8R10	0683-6835	R: fxd, comp, 68K ohms 5%, 1/4W	
A8R11	0683-1055	R: fxd, comp, 1 megohm 5%, 1/4W	
A8R12	0683-6835	R: fxd, comp, 68K ohms 5%, 1/4W	
A8R13	0683-1055	R: fxd, comp, 1 megohm 5%, 1/4W	
A8R14	0683-6835	R: fxd, comp, 68K ohms 5%, 1/4W	
A8R15	0683-1055	R: fxd, comp, 1 megohm 5%, 1/4W	
A8R16	0683-6835	R: fxd, comp, 68K ohms 5%, 1/4W	
A8R17	0683-1245	R: fxd, comp, 120K ohms 5%, 1/4W	
A8R18	0683-1245	R: fxd, comp, 120K ohms 5%, 1/4W	
A8R19	0683-1245	R: fxd, comp, 120K ohms 5%, 1/4W	
A8R20 thru A9R29		Not assigned	
A8R30	0683-1025	R: fxd, comp, 1000 ohms 5%, 1/4W	
A9	05245-91052	Assembly: measurement units, with -1248 BCD output	
A9C1	0150-0012	C: fxd, cer, 0.01 μf 20%, 1000 vdcw	
A9CR1 thru A9CR11	1901-0025	Semicon Device: diode junction, silicon	
A9DS1 thru A9DS9		Not assigned	
A9DS10 thru A9DS15	2140-0015	Lamp: glow, neon, NE2E	
A9R1	0683-5135	R: fxd, comp, 51K ohms 5%, 1/4W	
A9R2	0683-1055	R: fxd, comp, 1 megohm 5%, 1/4W	
A9R3	0683-5135	R: fxd, comp, 51K ohms 5%, 1/4W	
A9R4	0683-1055	R: fxd, comp, 1 megohm 5%, 1/4W	
A9R5	0683-5135	R: fxd, comp, 51K ohms 5%, 1/4W	
A9R6	0683-1055	R: fxd, comp, 1 megohm 5%, 1/4W	
A9R7	0683-5135	R: fxd, comp, 51K ohms 5%, 1/4W	
A9R8	0683-1055	R: fxd, comp, 1 megohm 5%, 1/4W	
A9R9	0683-5135	R: fxd, comp, 51K ohms 5%, 1/4W	
A9R10	0683-1055	R: fxd, comp, 1 megohm 5%, 1/4W	
A9R11	0683-5135	R: fxd, comp, 51K ohms 5%, 1/4W	
A9R12	0683-1055	R: fxd, comp, 1 megohm 5%, 1/4W	
A9R13	0683-1245	R: fxd, comp, 120K ohms 5%, 1/4W	
A9R14	0683-1245	R: fxd, comp, 120K ohms 5%, 1/4W	
A9R15	0683-1245	R: fxd, comp, 120K ohms 5%, 1/4W	
A9R16 thru A9R25		Not assigned	
A9R26	0683-1025	R: fxd, comp, 1000 ohms 5%, 1/4W	

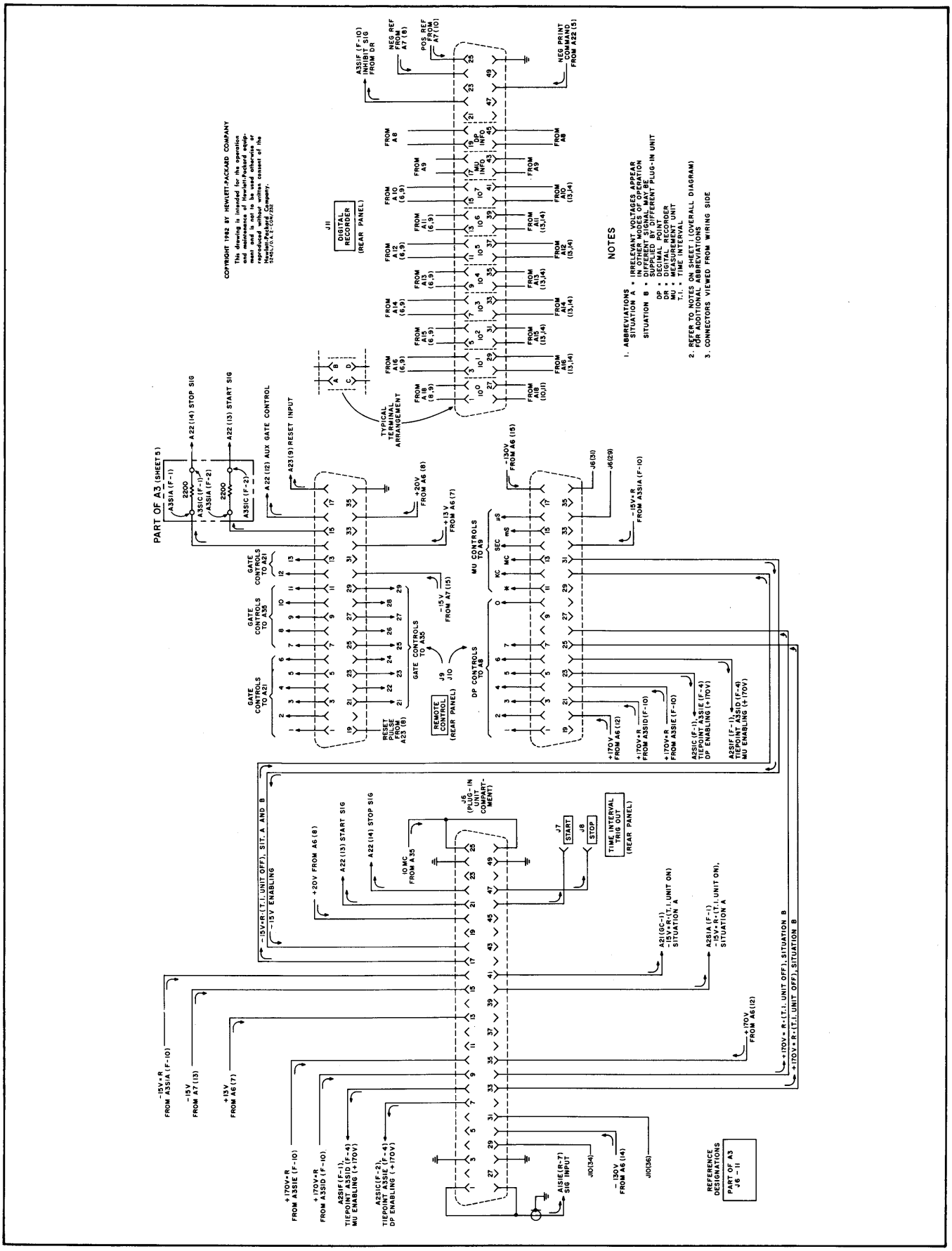

Figure 5-3. Remote Control Wiring and Connectors (Special)

SECTION VI

ADJUSTMENT AND TROUBLESHOOTING

6-1. INTRODUCTION.

6-2. This section provides maintenance, adjustments, and troubleshooting information for the Model 5245L Electronic Counter.

6-3. MAINTENANCE.

6-4. AIR FILTER. Inspect the air filter (center of rear panel) regularly and clean it before it becomes dirty enough to restrict air flow. Proceed as follows:

a. Remove top cover (unlock the two quarter turn fasteners and slide cover to the rear).

b. Remove four screws holding filter in place.

c. Wash filter in warm water and detergent.

d. Allow filter to dry completely.

e. DO NOT APPLY ANY COATING COMPOUND TO NON-METAL FILTERS. Coat metal filters with light film of filter oil. We recommend No. 3 Filter Coat from Research Products Company. This adhesive is available in "Handi-Koter" sprayer cans at most heating supply stores or from your Hewlett-Packard field office.

6-5. FUSE REPLACEMENT. Table 6-1 lists fuse rating and HP Part No. for proper operation with either 115V or 230Vac.

Table 6-1. Fuse Replacement

Conversion	115 Volt	230 Volt
Slide switch	Left ("115")	Right ("230")
AC LINE FUSE	2 ampere slow-blow (HP 2110-0006)	1 ampere slow-blow (HP 2110-0007)

6-6. FAN MOTOR. Two drops of light machine oil should be applied to the fan motor shaft once a year.

6-7. TEST EQUIPMENT.

6-8. Recommended test equipment for adjustments and troubleshooting is listed in Table 6-2. Test instruments other than those listed may be used if their specifications are equal to or exceed the required characteristics.

6-9. ASSEMBLY CONNECTION IDENTIFICATION.

6-10. Throughout the manual, connections to printed circuit assemblies are referred to in abbreivated form. For example, the connection to pin 15 of assembly A6 is A6(15).

Table 6-2. Recommended Test Equipment

Instrument Type	Required Characteristics	Use	Instrument Recom..
Oscilloscope	50 MHz bandwidth, dual trace plug-in, ext sync capability	Observe waveforms during troubleshooting and adjustment. Performance Check.	HP Model 175A Oscilloscope HP Model 1750A Dual Trace Vertical Ampl HP AC-21C Voltage Divider Probe (two) HP 10003A 10:1 Probe
Test Oscillator	Continuously variable from 10 Hz to 50 MHz, 100 mV output	Performance Check Adjustments Troubleshooting	HP Model 204B Oscillator HP Model 606A Test Oscillator
Low Frequency Generator	Continuously variable from 2 Hz to 10 Hz, 100 mV output	Performance Check Troubleshooting	HP Model 202A Low Frequency Function Generator
Pulse Generator	1 μsec wide, 1 V negative, 1 kHz repetition rate	Performance Check Troubleshooting	HP Model 212A Pulse Generator
DC Voltmeter	0V to $\pm$ 170V, 10 megohm input impedance, 1% accuracy	Troubleshooting Adjustments	HP Model 412A
Digital to Analog Converter	1-2-2-4 BCD code	Performance Check Troubleshooting	HP Model 581A
Strip-Chart Recorder		Performance Check Troubleshooting	Moseley 680A

6-11. INSTRUMENT COVER REMOVAL.

6-12. To remove top or bottom cover, unlock two quarter turn fasteners which secure cover to instrument. Then slide cover toward rear of instrument. To replace cover, reverse procedure.

WARNING

115/230 VAC AND DC SUPPLY WIRES ARE EXPOSED WHEN EITHER INSTRUMENT COVER IS REMOVED. EXERCISE CAUTION DURING TROUBLESHOOTING, ADJUSTMENT, OR REPAIR. REMOVE POWER FROM INSTRUMENT BEFORE REMOVING OR REPLACING COVERS OR ASSEMBLIES.

6-13. ASSEMBLY LOCATION

6-14. Top and bottom internal views of the Counter are shown in Figures 6-4 and 6-5. These figures show the location of the assemblies, connectors, chassis parts and test points.

Table 6-3. Assembly Designations

A1	INPUT SWITCH ASSEMBLY (SENSITIVITY)
A2	TIME BASE SWITCH ASSEMBLY
A3	FUNCTION SWITCH ASSEMBLY
A4	MODE SWITCH ASSEMBLY
A5	OUTPUT SWITCH ASSEMBLY
A6	RECTIFIER ASSEMBLY
A7	REGULATOR ASSEMBLY
A8	DECIMAL POINT ASSEMBLY
A9	MEASUREMENT UNITS ASSEMBLY
A10-A14	LOW FREQUENCY DECIMAL COUNTER
A15-A16	MEDIUM FREQUENCY DECIMAL COUNTER
A17	HIGH FREQUENCY DECIMAL COUNTER
A18	HIGH FREQUENCY READOUT
A19-A20	INPUT AMPLIFIER ASSEMBLIES
A21	FUNCTION CONTROL ASSEMBLY
A22	GATE CONTROL ASSEMBLY
A23	SAMPLING CONTROL ASSEMBLY
A24	CRYSTAL OVEN ASSEMBLY
A25	OVEN CONTROL ASSEMBLY
A26	OSCILLATOR ASSEMBLY
A27	MULTIPLIER ASSEMBLY
A28	MEDIUM FREQUENCY DECADE DIVIDER
A29-A34	LOW FREQUENCY DECADE DIVIDERS
A35	TIME BASE CONTROL ASSEMBLY

6-15. PRINTED CIRCUIT COMPONENT REPLACEMENT.

6-16. Component lead holes in the Model 5245L circuit boards have plated walls to ensure good electrical contact between conductors on the opposite sides of the board. To prevent damage to this plating and to the replacement component, apply heat sparingly and work carefully. The following replacement procedure is recommended.

a. Remove defective component.

b. Melt solder in component lead holes. Use clean dry soldering iron to remove excess solder. Clean holes with toothpick or wooden splinter. Do not use metal tool for cleaning as this may damage through-hole plating.

c. Bend lead of replacement component to the correct shape and insert component leads into component lead holes. Using heat and solder sparingly, solder leads in place. Heat may be applied to either side of board. A heat sink (longnose pliers, commercial heat-sink tweezers, etc) should be used when replacing transistors and diodes in order to prevent conduction of excessive heat from the soldering iron to the component.

d. Through-hole plating breaks are indicated by the separation from the board of the round conductor pad on either side of the board. To repair breaks, press conductor pads against board and solder replacement component lead to conductor pad on both sides of the board.

6-17. ADJUSTMENTS.

6-18. REGULATOR ASSEMBLY A7.

CAUTION

When troubleshooting or adjusting the power supply, do not short supplies to ground or to each other. This will damage the diodes and transistors.

a. Set line voltage to normal value (115 or 230 Vac).

b. Connect dc voltmeter (Table 6-2) to buss wire between A16(11) and A18(6).

c. Voltmeter should read +20 Vdc ± 0.5 Vdc. If voltage is outside this range, adjust A7R17 (Figure 7-7.

d. Vary line voltage from 103 to 127 Vac (207 to 255 Vac). The +20 Vdc supply should not vary more than 0.5 Vdc.

e. Check all supply voltages at locations, and under conditions shown in Table 6-4.

Note

Input sensitivity levels must be rechecked if power supply voltages are readjusted.

Table 6-4. Power Supply Voltages

Test Point	Line Voltage			Adjustment
	103	115	127	
A6(15)	-120 ±10%	-130 ± 10%	-150 ±10%	None
A6(12)	+160 ±10%	+170 ± 10%	+180 ±10%	None
A7(13)	- 15 ±.5	- 15 ±.5	- 15 ±.5	R5
A7(4)	+ 13 ±.5	+ 13 ±.5	+ 13 ±.5	R12
A16(11)	+ 20 ±.5	+ 20 ±.5	+ 20 ±.5	R17
A7(8)	-6.9 ± 1	-6.9 ± 1	-6.9 ± 1	Depends on adjustment of +20 vdc and -15vdc above
A7(10)	+17.6 ± 1	+17.6 ± 1	+17.6 ± 1	

6-19. INPUT AMPLIFIER A19.

6-20. The following procedure sets the output level and checks the gain, frequency response, and sensitivity of the input amplifier.

a. Turn counter on and set LEVEL to PRESET.

b. With no input connected, measure the output dc voltage at A19(6).

c. Adjust dc voltage with A19R20 to +6.3V ± .2V.

d. Connect output of Test Oscillator to Counter DC INPUT connector with 50-ohm termination at Counter.

e. Set Test Oscillator output to 50 MHz at 100 mV rms.

f. Check output at A19(6) with Oscilloscope; output should be 1.5V p-p minimum.

g. Increase output of Test Oscillator to 3V rms. The output at A19(6) is a symmetrically clipped waveform approximately 2V p-p.

h. Set SENSITIVITY to .1V, TIME BASE to 10 ms, and FUNCTION to FREQUENCY.

i. Set Test Oscillator output to 50 MHz at 100 mV rms.

j. Adjust A19R20 until correct count appears. Reduce input signal amplitude and readjust A19R20 for maximum sensitivity.

6-21. RATIO INPUT AMPLIFIER A20.

6-22. Repeat steps a through g in Paragraph 6-20. Change A19(6) to A20(6).

a. Set SIGNAL INPUT SENSITIVITY to 1V range, TIME BASE to EXT., AND FUNCTION to 1 PERIOD AVERAGE. Set OUTPUT STANDARD FREQUENCY (rear panel) to 100 Hz. Connect a coaxial cable from OUTPUT STANDARD FREQUENCY (rear panel) to AC SIGNAL INPUT (front panel).

b. Connect output of Test Oscillator 50 MHz at 100 mV to Counter EXT. TIME BASE through 50-ohm termination.

c. Adjust A20R20 until correct count appears. Reduce input signal amplitude and readjust A20R20 for maximum sensitivity.

6-23. FUNCTION CONTROL A21.

a. Set TIME BASE to .1 μs and FUNCTION to 1 PERIOD AVERAGE.

b. Set Test Oscillator to 1.5 MHz at 100 mV and connect to the Counter AC SIGNAL INPUT connector.

c. Observe correct count on counter. Reduce the Test Oscillator output and adjust A21R31 for maximum sensitivity.

Note

Do not change the setting of the output level control A19R20.

6-24. TROUBLESHOOTING.

6-25. TROUBLESHOOTING AIDS.

6-26. OPERATING MANUAL. The Operating Manual provided with the HP 5245L provides general information about the instrument and its capabilities. Refer to the Operating Manual for specifications, installations, step-by-step operating procedures, and a quick operator's check of instrument operation.

6-27. PRINCIPLES OF OPERATION. Section II provides valuable information on how the instrument and its circuits function.

6-28. SCHEMATIC DIAGRAMS. Schematic diagrams and a block diagram are provided in Section VII.

6-29. COMPONENT LOCATION. Photographs are provided with the schematic diagrams to aid in locating components on switches or circuit boards.

6-30. TROUBLESHOOTING "TREE". A step-by-step troubleshooting procedure is provided on pages 6-10 through 6-13. This procedure is based on the self check feature of the instrument and makes maximum use of front panel controls and indicators.

6-31. SELF CHECK TABLES. Table 6-8 provides 33 unique combinations of Go-No Go situations possible in the Self Check function. Circuit elements to be checked are indicated for each combination. Table 6-6 lists assemblies checked in Self Check functions.

6-32. TROUBLESHOOTING PROCEDURE.

6-33. MALFUNCTION AT TURN ON. If counter fails to turn on (no display, decimal point, or measurement units) make the following checks:

a. Line voltage switch set for power source.

b. Power cord plugged into counter and power source.

c. Line fuse good.

d. Ac power available at source.

e. Power supply (A6, A7, T2, L1, L2, C5).

6-34. MALFUNCTION DURING SELF CHECK. If counter malfunctions in some, but not all, check functions, see Table 6-8 for probable cause. If counter will not self-check for any function, see Trouble-shooting "Tree," Table 6-7.

6-35. MALFUNCTION DURING OPERATION. If the counter will turn on, but malfunctions when operation is attempted, switch to Self Check for the function and time base desired. If Counter will Self Check but will not function with an external signal, check setting of SENSITIVITY and LEVEL controls, input signal level, and connections to counter.

6-36. If counter will function in FREQUENCY mode but not in PERIOD (below 1 MHz) check control gate 5 (A21 CR5, CR11). If counter will function in PERIOD but not in FREQUENCY, check control gate 2 (A21CR3, CR9). If counter malfunctions in both PERIOD and FREQUENCY, but self checks in both functions, check input attenuator and input amplifier.

6-37. If counter malfunctions when operation is attempted and fails to self-check in the function desired (see Paragraph 6-34).



1. Turn SAMPLE RATE control clockwise from POWER OFF position to turn counter on.
2. Set SENSITIVITY switch to CHECK.
3. Set LEVEL control to PRESET.
4. Set FUNCTION switch to FREQUENCY.
5. See table below for proper display (± 1 count) for each position of TIME BASE switch.

TIME BASE	DISPLAY
1 μs	00000010. MHz
10 μs	0000010.0 MHz
.1 ms	000010.00 MHz
1 ms	00010000. kHz
10 ms	0010000.0 kHz
.1 s	010000.00 kHz
1 s	10000.000 kHz
10 s	0000.0000 kHz

6. Set FUNCTION switch to MANUAL START. Counter should count continuously at frequency selected on TIME BASE switch.
7. Set FUNCTION switch to 1 PERIOD AVERAGE.
8. See table below for proper display (±1 count) for each PERIOD AVERAGE position of the FUNCTION switch.

PERIOD AVERAGE	DISPLAY
1	00000001
10	00000010
100	00000100
1K	00001000
10K	00010000
100K	00100000

Figure 6-1. Self Check

Table 6-5. Period Average Checks With External Signal

TIME BASE SWITCH	FUNCTION SWITCH - PERIOD AVERAGE					
	1	10	100	1K	10K	100K
10 s	*	*	*	*	*	*
1 s	00000000. sec	0000000.0 sec	*	*	*	*
.1 s	0000000.0 sec	000000.00 sec	00000000. ms	*	*	*
10 ms	000000.00 sec	00000000. ms	0000000.0 ms	000000.00 ms	*	*
1 ms	00000000. ms	0000000.0 ms	000000.00 ms	00000003. ms	0000003.3 μs	*
.1 ms	0000000.0 ms	000000.00 ms	00000003. μs	0000003.3 μs	000003.33 μs	00003.333 μs
10 μs	000000.00 ms	00000003. μs	0000003.3 μs	000003.33 μs	00003.333 μs	0003.3333 μs
1 μs	00000003. μs	0000003.3 μs	000003.33 μs	00003.333 μs	0003.3333 μs	003.33333 μs
.1 μs	0000003.0 μs	000003.33 μs	00010.000 μs	0003.3333 μs	003.33333 μs	03.333333 μs
Input Frequency = 300 kHz						

Table 6-6. Assembly Check

FUNCTION	TIME BASE	DISPLAYS	ASSEMBLIES CHECKED																GATES CHECKED
			2	3	10	11	12	13	14	15	16	27	28	29	30	31	32	33	34	
Frequency	1 μs	00000010. Mc	x								x	x								3, 6, 28
	10 μs	0000010.0 Mc	x							x	x	x	x							3, 6, 27
	.1 ms	000010.00 Mc	x						x	x	x	x	x	x						3, 6, 26
	1 ms	00010000. kc	x					x	x	x	x	x	x	x	x					3, 6, 25
	10 ms	0010000.0 kc	x				x	x	x	x	x	x	x	x	x	x				3, 6, 24
	.1 s	010000.00 kc	x			x	x	x	x	x	x	x	x	x	x	x	x			3, 6, 23
	1 s	10000.000 kc	x		x	x	x	x	x	x	x	x	x	x	x	x	x	x		3, 6, 22
	10 s	0000.0000 kc	x		x	x	x	x	x	x	x	x	x	x	x	x	x	x	x	3, 6, 21
Period Average	1	00000001		x									x	x						12, 27
	10	00000010		x							x		x	x	x					11, 13, 27
	100	00000100		x						x	x		x	x	x	x				10, 13, 27
	1K	00001000		x					x	x	x		x	x	x	x	x			9, 13, 27
	10K	00010000		x				x	x	x	x		x	x	x	x	x	x		8, 13, 27
	100K	00100000		x			x	x	x	x	x		x	x	x	x	x	x	x	7, 13, 27

The following assemblies are checked in all positions used in the Self-Check Table:

6, 7, 17, 18, 21, 22, 23, 24, 25, 26, and 35.

Assemblies 8 and 9 are checked in all Frequency Self-Checks.

The SENSITIVITY switch (A1) is in the check position for all Self Check functions.

Assemblies 4, 5, 19, 20, are not checked in Self Check functions.

Assembly A26 is checked for operation, but not for accuracy or stability.

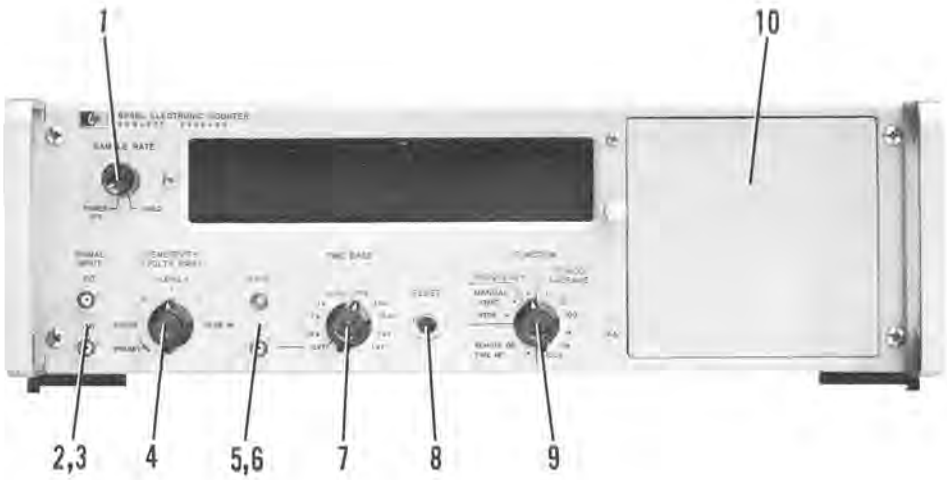

1. SAMPLE RATE
   a. Controls power to all circuits except crystal oven heater; max ccw turns POWER OFF.
   b. Controls time between measurements from 0.2 sec to 5 sec.
   c. Causes display to HOLD indefinitely when maximum cw.

2. DC SIGNAL INPUT provides direct coupling to internal amplifier for most measurements.

3. AC SIGNAL INPUT provides coupling to internal amplifier through .022 μf (600 vdc maximum).

4. SIGNAL INPUT SENSITIVITY & LEVEL control.
   a. Controls input attenuator; set to highest position which includes signal amplitude (max overload; 50v in position 0.1, 150v in position 1; 500v in position 10).
   b. Maximum CCW (CHECK position) gives internal self check; counts 10 MHz with selected TIME-BASE gate for FREQUENCY; 100 kHz for number of periods averaged (10 μsec to 1 sec) for PERIOD AVERAGE, or continuously at selected TIME BASE frequency (0.1 Hz to 10 MHz) for MANUAL START.
   c. Maximum CW (PLUG-IN position) connects output of plug-in unit directly to input amplifier.
   d. The LEVEL control adjusts the input trigger level from -0.3V dc to +0.3V dc when attenuator is set at 0.1V rms, from -3.0V dc to +3.0V dc when attenuator is set at 1V rms, and -30V dc to +30V dc when attenuator is set at 10V rms.
   e. Maximum counterclockwise position (PRESET) sets trigger level at zero volts.

5. GATE lamp glows during counting (main gate open).

6. EXT connector
   a. Provides input for higher of two frequencies for ratio measurement (lower frequency to SIGNAL INPUT) when TIME BASE set to EXT.
   b. Provides output frequency 0.1 Hz to 1 MHz as selected by TIME-BASE switch (see text for restrictions).

7. TIME BASE selects either time that main gate is on for frequency or time unit per count for period measurement.

8. RESET pushbutton returns both displayed and internal count to zero when pressed.

9. FUNCTION
   a. Permits totalizing of pulses applied to SIGNAL INPUT when set to MANUAL START; holds accumulated count when switched to MANUAL stop.
   b. Permits measurement of frequency applied to SIGNAL INPUT during interval selected by TIME-BASE switch when in FREQUENCY.
   c. Permits period measurement of waveforms applied to SIGNAL INPUT averaged over 1 to 100,000 periods when set to PERIOD AVERAGE.
   d. Removes control of TIME-BASE and FUNCTION switches when set to REMOTE or TIME INT; remote control is provided through rear connector or plug-in unit.

Figure 6-2. Operating Controls (Front Panel)

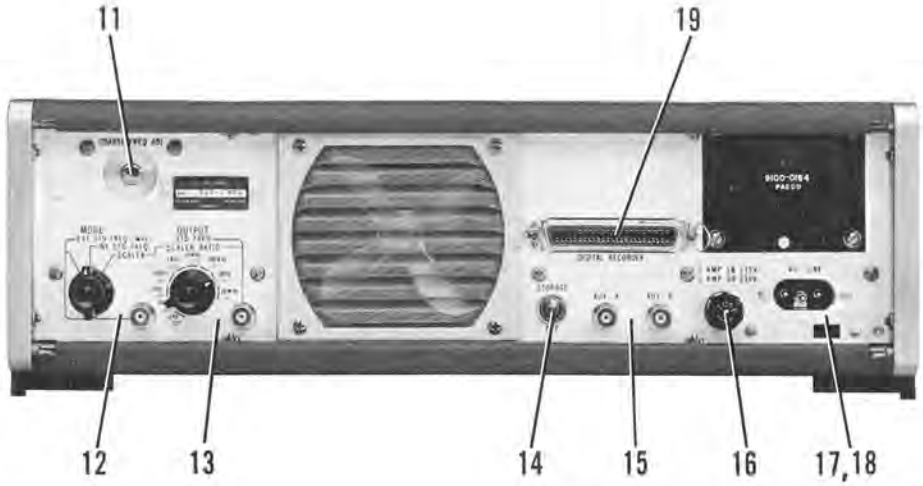

10. Plug-in compartment
    a. Receives plug-in unit to extend basic counter capabilities. To install plug-in (1) turn power off, (2) loosen knurled screw at side of compartment, (3) remove blank panel or plug-in unit, (4) slide desired plug-in unit into place and tighten knurled screw.
    b. Permits access to fine and medium frequency controls through panel at rear of compartment; FINE FREQ ADJ has range of about 5×10^{-8}; MED FREQ ADJ has range of about 1×10^{-6}.

11. COARSE FREQ ADJ permits adjustment of oscillator over a range of about 1×10^{-5}.

12. MODE
    a. Permits use of external 1-Mc frequency standard for time-base control when set to EXT STD FREQ (1 MHz).
    b. Permits normal operation of counter using internal oscillator when set to INT STD FREQ.
    c. Permits scaling of input signal by factors of 10 when set to SCALER.

13. OUTPUT
    a. Supplies selected frequency when MODE is set to INT STD FREQ (see text for restrictions).
    b. Supplies scaled input frequency when MODE is set to SCALER.

14. STORAGE switch provides display storage when up; continuous display of internal count when OFF (down).

15. AUX A/AUX B (TIME INTERVAL TRIGGER OUT - START/STOP). Auxiliary plug-in outputs. See appropriate plug-in manual.

16. Fuse provides overload protection; should be 2 ampere slow-blow for 115-volt operation; 1 ampere slow-blow for 230-volt operation.

17. Line-voltage switch permits selection of either 115- or 230-vac line; insert narrow blade and slide to left for 115 v, slide to right for 230v.

18. AC LINE connector connects to flat plug on power cable.

19. DIGITAL RECORDER connector supplies BCD information to recorder, analog converter, or data processing equipment.

Figure 6-3. Operating Controls (Rear Panel)

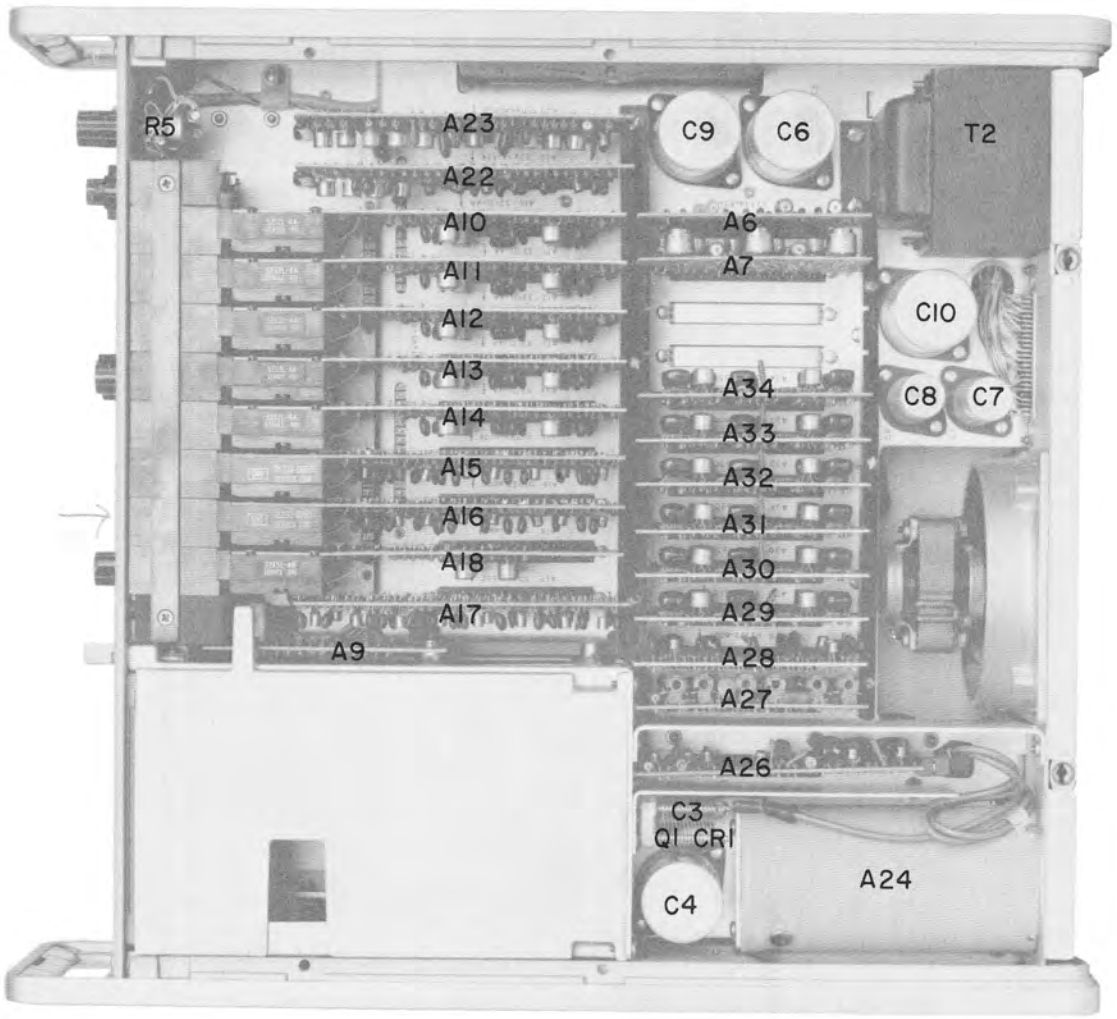

Figure 6-4. Top Internal View

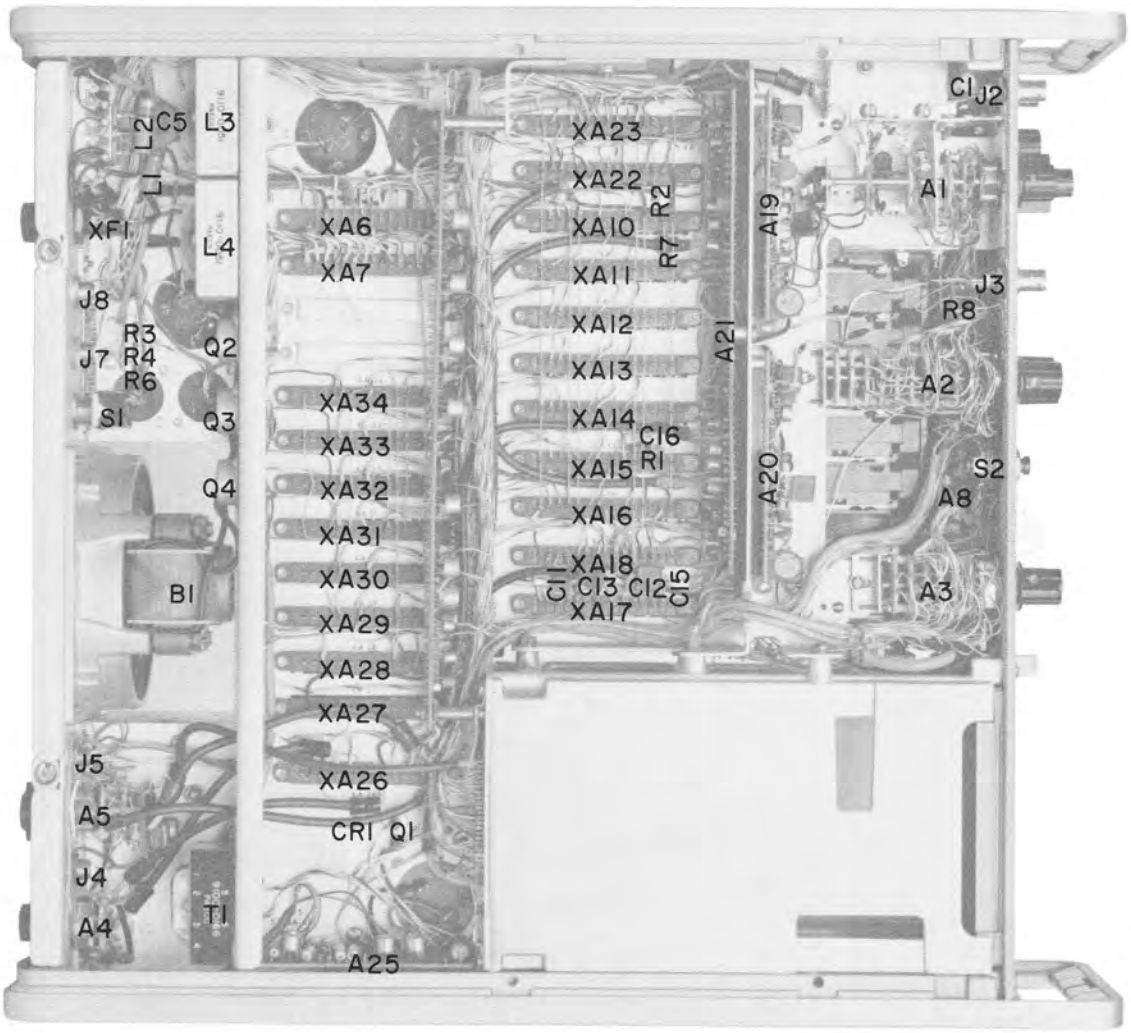

Figure 6-5. Bottom Internal View

Table 6-7. Troubleshooting "Tree".

Read Paragraphs 6-24 through 6-37.

Set Controls as follows:

MODE	INT STD FREQ
OUTPUT	1 MHz
SENSITIVITY . . .	CHECK
TIME BASE	.1 μs
FUNCTION.	MANUAL START

Circled numbers indicate corresponding waveforms and the location of test points on the circuit diagrams.

1 Observe Gate Light

OFF . . . . . Begin at **2** below
ON . . . . . Begin at **3** page 6-11

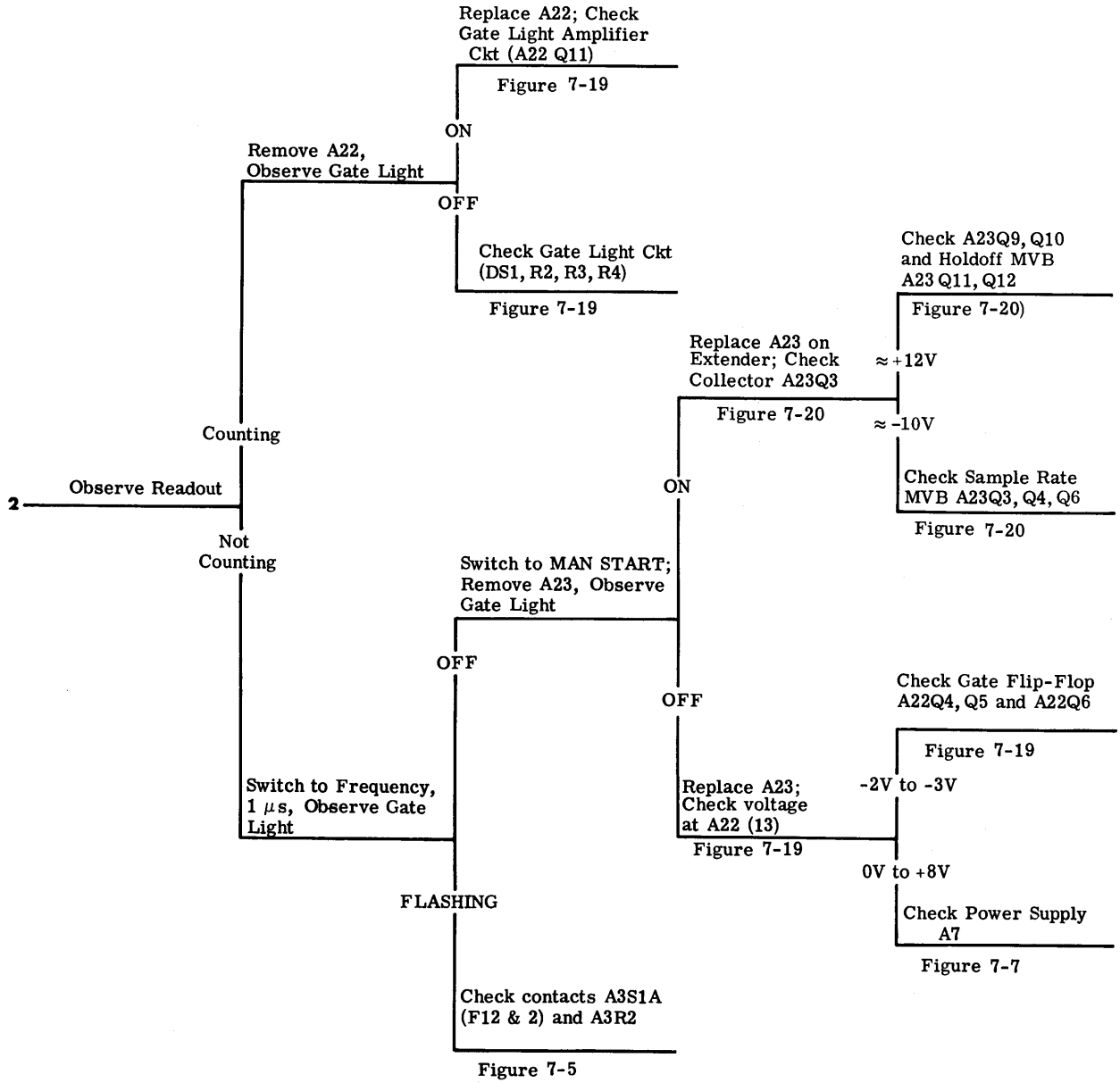

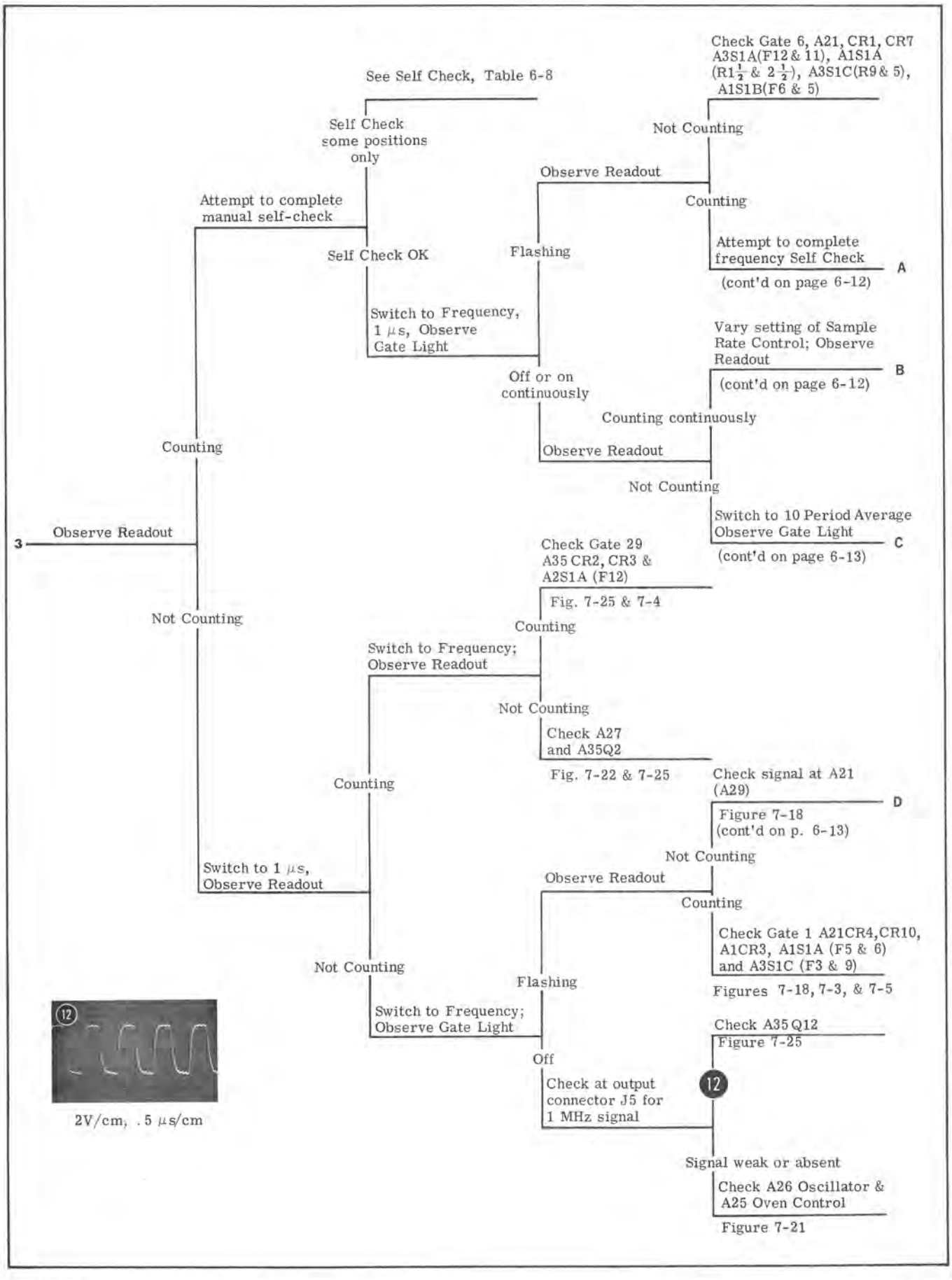
3
Observe Readout
Counting
Not Counting
Attempt to complete manual self-check
Switch to 1 μs, Observe Readout
Self Check some positions only
See Self Check, Table 6-8
Self Check OK
Switch to Frequency, 1 μs, Observe Gate Light
Flashing
Observe Readout
Not Counting
Check Gate 6, A21, CR1, CR7 A3S1A(F12 & 11), A1S1A (R1½ & 2½), A3S1C(R9 & 5), A1S1B(F6 & 5)
Counting
Attempt to complete frequency Self Check
A
(cont'd on page 6-12)
Off or on continuously
Vary setting of Sample Rate Control; Observe Readout
B
(cont'd on page 6-12)
Counting continuously
Observe Readout
Not Counting
Switch to 10 Period Average Observe Gate Light
C
(cont'd on page 6-13)
Counting
Switch to Frequency; Observe Readout
Not Counting
Check Gate 29 A35 CR2, CR3 & A2S1A (F12)
Fig. 7-25 & 7-4
Counting
Not Counting
Check A27 and A35Q2
Fig. 7-22 & 7-25
Check signal at A21 (A29)
D
Figure 7-18 (cont'd on p. 6-13)
Not Counting
Observe Readout
Counting
Check Gate 1 A21CR4,CR10, A1CR3, A1S1A (F5 & 6) and A3S1C (F3 & 9)
Figures 7-18, 7-3, & 7-5
Flashing
Switch to Frequency; Observe Gate Light
Off
Check A35 Q12
Figure 7-25
12
Check at output connector J5 for 1 MHz signal
Signal weak or absent
Check A26 Oscillator & A25 Oven Control
Figure 7-21
12
2V/cm, .5 μs/cm

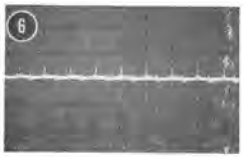

.2V/cm, 1 μs/cm

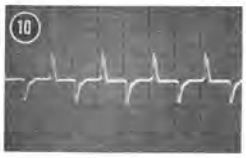

2V/cm, .5 μs/cm



5V/cm, 50 ms/cm



1V/cm, 50 ms/cm

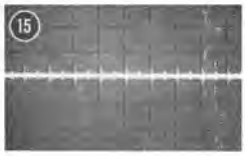

.1V/cm, 1 μs/cm



.2V/cm, .1 μs/cm

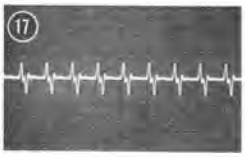

2V/cm, 1 μs/cm

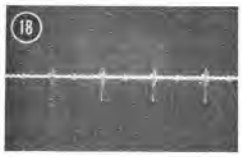

2V/cm, .5 ms/cm

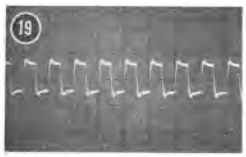

5V/cm, 1 μs/cm

See Paragraph 6-34

Attempt to complete period average Self Check

Self Check

Attempt to complete Frequency Self Check

Self Check OK

Self Check in some positions only

See Table Period Self Check

A

(cont'd from p. 6-11)

Self Check in some positions only

See Table 6-8 Frequency Self Check

Check Sample Trigger Amplifier A22Q10

Figure 7-19

14

Check signal at A22(6)

Figure 7-19

Signal weak or absent

Check Transfer MVB A22Q8, Q9, CR3, CR4

Figure 7-19

signal weak or absent

Check signal at A23(4)

Figure 7-20

Left DCA counts at steady 10 sec rate

13

Check Sample Rate MVB A23Q3, Q4, Q5, Q6, Q7

Figure 7-20

Vary setting of Sample Rate Control, Observe Readout

B

(cont'd from p. 6-11)

Check Holdoff Trigger Emitter Follower A23Q10

Figure 7-20

Count changes with setting of Sample Rate Control

Check voltage at A23(10) while depressing & releasing RESET

Figure 7-20

≈ +10V RESET depressed

≈ 0V RESET released

≈ 0V constant

signal absent or weak

Check signal at A22(7)

Figure 7-19

Check Holdoff MVB A23Q11, Q12

Figure 7-20

6

Check Gate Inhibit Amplifier A22Q6

Figure 7-19

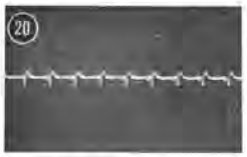

1V/cm, .1 μs/cm

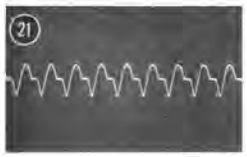

5V/cm
.1 μs/cm

Check A23Q9, Q10 and Holdoff MVB A23Q11, Q12
Figure 7-20

+12V

Put A23 on Extender Chk Collector A23Q3
Figure 7-20

-13V

Gate Light On
Left DCA counts at steady 10 sec rate

Check Sample Rate MVB A23Q3, Q4, Q6
Figure 7-20

Check Steering Amplifiers & Gate Flip-Flop Ckt A22Q2, Q3, Q4, Q5, Q6
Figure 7-19

18

Switch to frequency 1 μs, remove A23, observe Gate Light & Readout

Check signal at A22(4)
Figure 7-19

signal weak or absent

Check Trigger Amplifier Ckt A22Q1
Figure 7-19

OFF

Gate Light off
No Count

10

Switch to 10 Period Average; Observe Gate Light

C (cont'd from p. 6-11)

Check A21Q2 Gate 3, A21CR6, CR12, A3S1A (F12 & 11) A1S1A(R1½ & R2½) A3S1C (R9 & 5)
Figures 7-18, 7-5, 7-3

signal weak or absent

Replace A23, Check signal at A22(8)
Figure 7-19

Flashing

signal weak or absent

Check signal at Emitter A21Q2
Figure 7-18

19

Check Gate 12 Ckt A21CR15 & A3S1A (F12 & 4)
Figs. 7-5 and 7-18

Check Period Trigger Ckt A21Q5, Q6
Figure 7-18

Check Pulse Amplifier Ckt A21Q13
Figure 7-18

20

Check A17
Figure 7-13

Check Collector A21Q11
Figure 7-18

15

17

signal weak or absent

Check Main Gate Ckt A21Q10, Q11, Q12
Figure 7-18

Check signal at A21(29)

D Figure 7-18 (cont'd from p. 6-11)

Check Collector A21Q9
Figure 7-18

signal weak or absent

signal weak or absent

16

Check Frequency Trigger Ckt A21Q3, Q4
Figure 7-18

Check signal at A21(27)
Figure 7-18

Check Emitter A21Q1
Figure 7-18

21

signal weak or absent

signal weak or absent

Check Gate Amplifier Ckt A22Q7
Figure 7-19

Check Emitter Follower A21Q1
Figure 7-18

Table 6-8.
SELF CHECK →

SECTION VII
CIRCUIT DIAGRAMS

7-1. INTRODUCTION.

7-2. This section includes the following:

a. General Notes for Schematic Diagrams (Figure 7-1).

b. Block Diagram (Figure 7-2).

c. Schematic Diagrams and Component Location illustrations of Model 5245L circuits, assemblies and connectors in the order of their assembly designation (A1 through A35, Figures 7-3 through 7-26). These figures may also include waveforms and voltages.

d. Schematic Diagrams and Component Location illustrations for Options 02 and 03 assemblies follow after the standard assembly they replace (Figures 7-10, 7-12, 7-15, and 7-16).

7-3. The Block Diagram or any schematic diagram, when unfolded, can be used with any other part of this manual, or with the manual closed.

7-4. DC voltages are measured with a hp Model 412A DC Voltmeter. Typical voltages are shown.

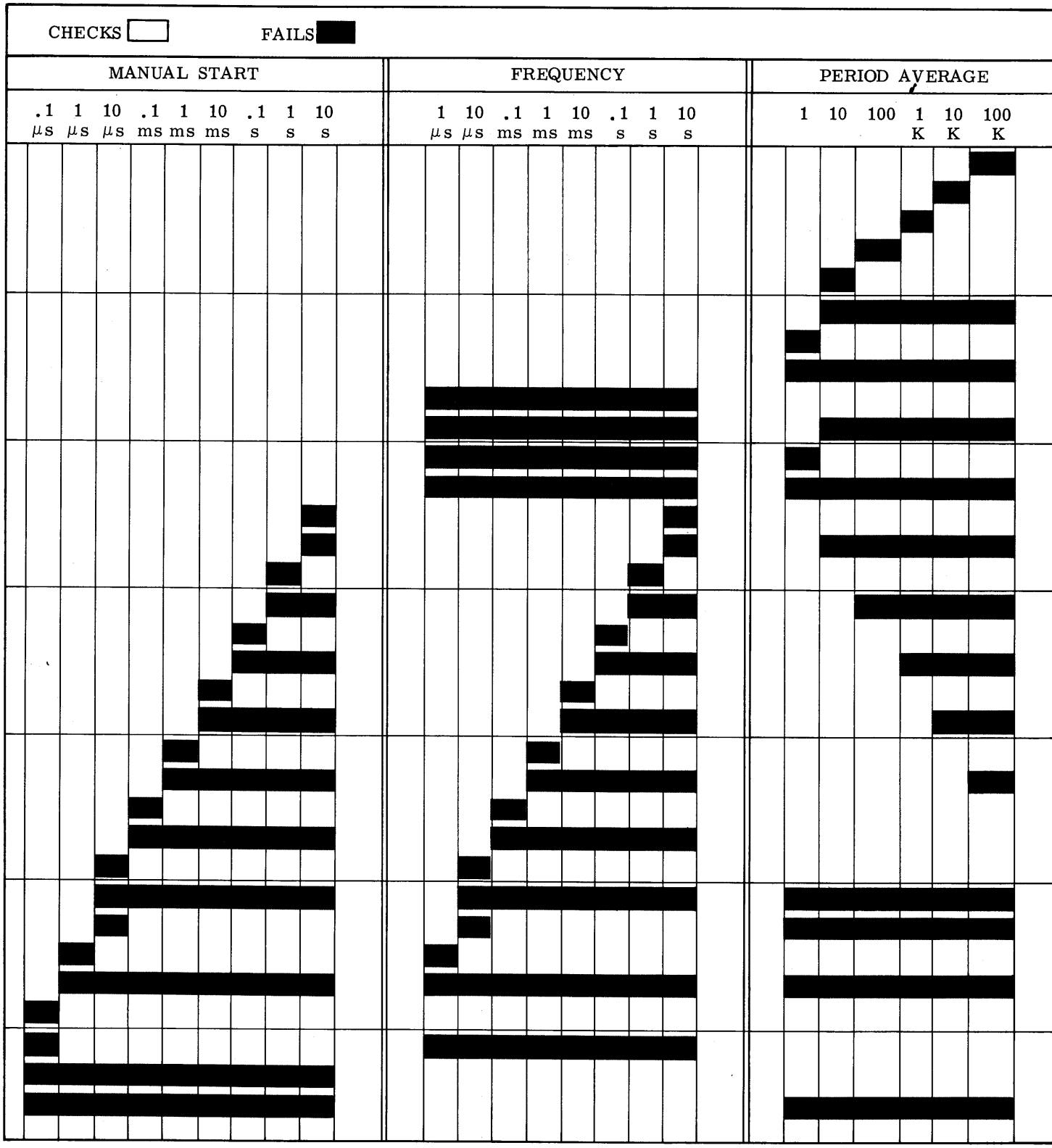
CHECKS
FAILS
MANUAL START
.1 μs
1 μs
10 μs
.1 ms
1 ms
10 ms
.1 s
1 s
10 s
FREQUENCY
1 μs
10 μs
.1 ms
1 ms
10 ms
.1 s
1 s
10 s
PERIOD AVERAGE
1
10
100
1 K
10 K
100 K

CHECK

10 s	PERIOD AVERAGE 1	10	100	1 K	10 K	100 K	DECADE DIVIDER	GATE	SWITCH CONTACT	ASSEME
								7 A35CR9	A3S1A(F9)	
								8 A35CR12	A3S1A(F8)	
								9 A35CR15	A3S1A(F7)	
								10 A35CR18	A3S1A(F6)	
								11 A35CR21	A3S1A(F5)	
								13 A21CR16	A3S1A(R9-1/2)	A27Q7, Q8
									A3S1A(F4)	
									A3S1B(F12) A1S1A(F8)	A1CR1, C
								6 A21CR1, CR7	A1S1A(R2-1/2) A1S1B(F5) A1S1C(R5)	
									A3S1A(F11)	
								12 A21CR15	A3S1A(F4)	
								3 A21CR6, CR12		A21Q2, Q5, Q
								21 A35CR22, Q9	A2S1A(F4)	
							A34	11 A35CR20		
								22 A35CR19, Q8	A2S1A(F5)	
							A33	10 A35CR17		
								23 A35CR16, Q7	A2S1A(F6)	
							A32	9 A35CR14		
								24 A35CR13, Q6	A2S1A(F7)	
							A31	8 A35CR11		
								25 A35CR10, Q5	A2S1A(F8)	
							A30	7 A35CR8		
								26 A35CR7, Q4	A2S1A(F9)	
							A29			
									A2S1A(F10)	
							A28			A35Q
								27 A35CR6, Q3		
								28 A35CR4, CR5	A2S1A(F11)	
										A26Q6,
								29 A35CR2, CR3	A2S1A(F12)	
										A27 A3
									A3S1C(F2 & 3), A3S1A(F2) A1S1A(F6)	A1CR3 A
								1 A21CR4, CR10		

CHECK		
GATE	SWITCH CONTACT	ASSEMBLY OR CIRCUIT
7 A35CR9	A3S1A(F9)	
8 A35CR12	A3S1A(F8)	
9 A35CR15	A3S1A(F7)	
10 A35CR18	A3S1A(F6)	
11 A35CR21	A3S1A(F5)	
13 A21CR16	A3S1A(R9-1/2)	A27Q7, Q8 A35Q1, Q10
	A3S1A(F4)	
	A3S1B(F12) A1S1A(F8)	A1CR1, CR2, CR3
6 A21CR1, CR7	A1S1A(R2-1/2) A1S1B(F5) A1S1C(R5)	
	A3S1A(F11)	
12 A21CR15	A3S1A(F4)	
3 A21CR6, CR12		A21Q2, Q5, Q6 A22Q1, Q2, Q3 A23
21 A35CR22, Q9	A2S1A(F4)	
11 A35CR20		
22 A35CR19, Q8	A2S1A(F5)	
10 A35CR17		
23 A35CR16, Q7	A2S1A(F6)	
9 A35CR14		
24 A35CR13, Q6	A2S1A(F7)	
8 A35CR11		
25 A35CR10, Q5	A2S1A(F8)	
7 A35CR8		
26 A35CR7, Q4	A2S1A(F9)	
	A2S1A(F10)	
		A35Q11
27 A35CR6, Q3		
28 A35CR4, CR5	A2S1A(F11)	
		A26Q6, Q7
29 A35CR2, CR3	A2S1A(F12)	
		A27 A35Q2
	A3S1C(F2 & 3), A3S1A(F2) A1S1A(F6)	A1CR3 A3R2
1 A21CR4, CR10		

Table 6-8. Self Check

SYMBOLS

- FRONT PANEL
- REAR PANEL
- KNOB CONTROL
- SCREWDRIVER ADJUST
- MAIN SIGNAL PATH
- FEEDBACK PATH
- CONDUCTING ELEMENT
- CW — WIPER MOVES TOWARD "CW" WHEN CONTROL IS ROTATED CLOCKWISE
- POWER LINE GROUND
- CIRCUIT COMMON GROUND
- 8 — TEST POINT
- A — "AND" GATE
- I — INHIBIT GATE
- O — "OR" GATE

WAVEFORMS SHOWN ARE TYPICAL

SWITCH DESIGNATIONS

A3S1BR(2-1/2)

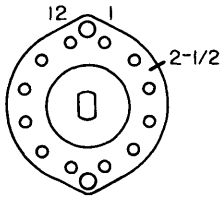

A3S1 SWITCH S1 WITHIN ASSEMBLY A3

B 2ND WAFER FROM FRONT (A=1ST, ETC)

R REAR OF WAFER (F=FRONT)

(2-1/2) TERMINAL LOCATION ($2\frac{1}{2}$) (VIEWED FROM FRONT)

REFERENCE DESIGNATIONS

REFERENCE DESIGNATIONS WITHIN ASSEMBLIES ARE ABBREVIATED. ADD ASSEMBLY NUMBER TO ABBREVIATION FOR COMPLETE DESCRIPTION.

ASSEMBLY	ABBREVIATION	COMPLETE DESCRIPTION
A25	C1	A25C1
A25A1	CR1	A25A1CR1
NO PREFIX	J3	J3

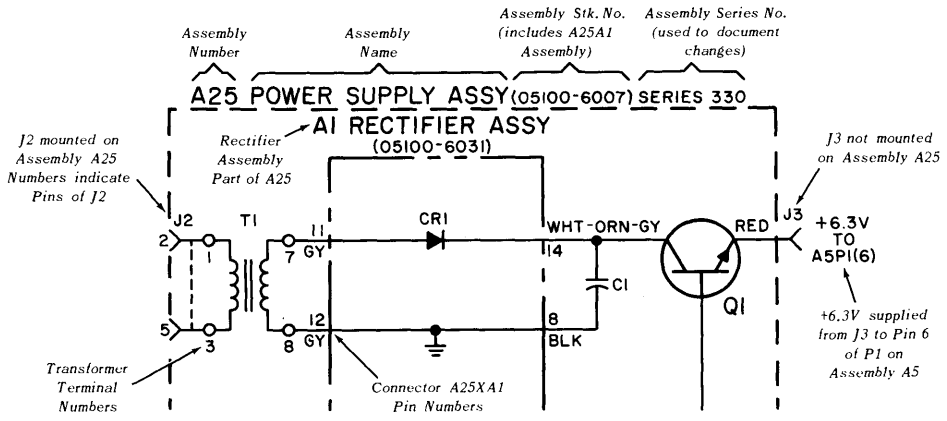

Figure 7-1. General Notes for Schematic Diagrams

NC

1. SYMBOLS

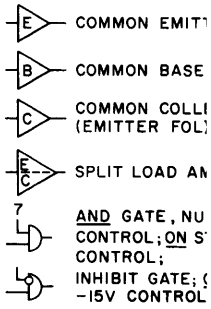

2. GENERAL ABBREVIATION
   - DP = DECIMAL POI
   - DR = DIGITAL RECOR
   - GC = GATE CONTROL
   - MU = MEASUREMENT
   - BCD = BINARY CODED
   - DCA = DECIMAL COUNT
   - DDA = DECADE DIVIDE
   - MPS = MULTIPLIED PE

3. SWITCH SITUATION ABBRE
   - · = AND
   - + = OR
   - C = INPUT SWITCH:
   - $\overline{C}$ = INPUT SWITCH:
   - E = TIME BASE SWI
   - $\overline{E}$ = TIME BASE SWI
   - F = FUNCTION SWIT
   - M = FUNCTION SWIT MANUAL STOP
   - $\overline{M}$ = FUNCTION SWIT OR MANUAL ST
   - P = FUNCTION SWIT (FOR ANY POSI
   - P_A = FUNCTION SWIT (FOR SPECIFIC
   - R = FUNCTION SWIT TIME INT
   - $\overline{R}$ = FUNCTION SWIT(TIME INT)

4. DP LAMPS ARE DESIGNAT POSITION FROM RIGHT T(FRONT

5. DP AND MU LAMPS OPER/ INPUT SWITCH IS NOT C IN CHECK ONLY IF FUNCT FREQUENCY

6. DP AND MU LAMPS ARE CONTROL SUPPLIED TO / TERMINAL FROM SWITCH

7. TIME RELATIONSHIPS

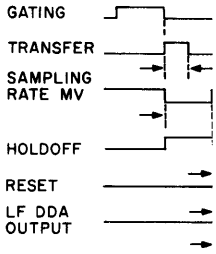

Figure 7-2
BLOCK DIAGRAM

NOTES

1. SYMBOLS

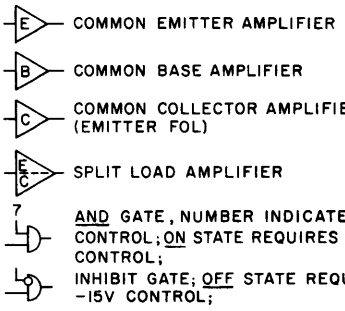

2. GENERAL ABBREVIATIONS
   - DP = DECIMAL POINT
   - DR = DIGITAL RECORDER
   - GC = GATE CONTROL
   - MU = MEASUREMENT UNIT
   - BCD = BINARY CODED DECIMAL
   - DCA = DECIMAL COUNTER ASSY
   - DDA = DECADE DIVIDER ASSY
   - MPS = MULTIPLIED PERIOD SIG

3. SWITCH SITUATION ABBREVIATIONS
   - · = AND
   - + = OR
   - C = INPUT SWITCH: CHECK
   - $\bar{C}$ = INPUT SWITCH: NOT CHECK
   - E = TIME BASE SWITCH: EXT
   - $\bar{E}$ = TIME BASE SWITCH: NOT EXT
   - F = FUNCTION SWITCH: FREQUENCY
   - M = FUNCTION SWITCH: MANUAL START OR MANUAL STOP
   - $\bar{M}$ = FUNCTION SWITCH: NOT (MANUAL START OR MANUAL STOP)
   - P = FUNCTION SWITCH: PERIOD AVERAGE (FOR ANY POSITION)
   - P_A = FUNCTION SWITCH: PERIOD AVERAGE (FOR SPECIFIC POSITION)
   - R = FUNCTION SWITCH: REMOTE OR TIME INT
   - $\bar{R}$ = FUNCTION SWITCH: NOT (REMOTE OR TIME INT)

4. DP LAMPS ARE DESIGNATED 0 THRU 7 FOR EACH POSITION FROM RIGHT TO LEFT AS VIEWED FROM FRONT

5. DP AND MU LAMPS OPERATE AS TABULATED WHEN INPUT SWITCH IS NOT CHECK; LAMPS OPERATE IN CHECK ONLY IF FUNCTION SWITCH IS SET TO FREQUENCY

6. DP AND MU LAMPS ARE LIGHTED BY +170V CONTROL SUPPLIED TO APPROPRIATE A8 - A9 TERMINAL FROM SWITCH OR J10

7. TIME RELATIONSHIPS

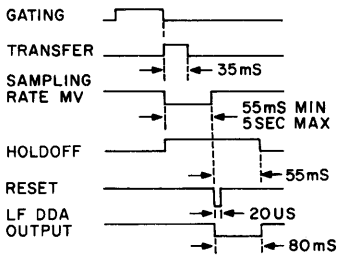

GATE CONTROL SUMMARY (NOTE 3)

GATE CONTROL DESIGNATION	INTERNAL CONTROL: SWITCH SITUATION FOR ON STATE (-15V), WITH (PLUG IN OFF)	INTERNAL CONTROL: SOURCE	REMOTE CONTROL (J9 PIN NO.)
1	$(M\cdot\bar{E}\cdot C)+(P\cdot E\cdot C)+(P\cdot\bar{E})$	A1SIC (F-5)	1
2	$(M+F)\cdot\bar{C}$	A1SIB (R-2)	2
3	$(F\cdot\bar{E})+(P\cdot C)$	A3SIC (R-5)	3
4	$(M+F)\cdot E+(P\cdot E\cdot\bar{C})$	A2SIA (F-3)	4
5	$P\cdot\bar{C}$	A1SIA (R-8)	5
6	$F\cdot\bar{E}\cdot C$	A1SIA (F-2)	6
7	100K P_A	A3SIA (F-9)	7
8	10K P_A	A3SIA (F-8)	8
9	1K P_A	A3SIA (F-7)	9
10	100P_A	A3SIA (F-6)	10
11	10P_A	A3SIA (F-5)	11
12	F + 1P_A	A3SIA (F-3,4)	12
13	ANY P_A EXCEPT 1P_A	A3SIA (R-9 1/2)	13
21	$(10S)\cdot(M+F+P\cdot\bar{C})$	A2SIA (F-4)	21
22	$(1S)\cdot(M+F+P\cdot\bar{C})$	A2SIA (F-5)	22
23	$(0.1S)\cdot(M+F+P\cdot\bar{C})$	A2SIA (F-6)	23
24	$(10mS)\cdot(M+F+P\cdot\bar{C})$	A2SIA (F-7)	24
25	$(1mS)\cdot(M+F+P\cdot\bar{C})$	A2SIA (F-8)	25
26	$(0.1mS)\cdot(M+F+P\cdot\bar{C})$	A2SIA (F-9)	26
27	$(10US)\cdot(M+F+P)+(P\cdot C)$	A2SIA (F-10)	27
28	$(1US)\cdot(M+F+P\cdot\bar{C})$	A2SIA (F-11)	28
29	$(0.1US)\cdot(M+F+P\cdot\bar{C})$	A2SIA (F-12)	29

DECIMAL POINT SITUATIONS (NOTES 3,4,5,6)

FUNCTION SWITCH	TIME BASE SWITCH: 0.1US	1US	10US	0.1mS	1mS	10mS	0.1S	1S	10S	EXT
M START	—	—	—	—	—	—	—	—	—	—
M STOP	—	—	—	—	—	—	—	—	—	—
F	—	0	1	2	0	1	2	3	4	—
1P_A	1	0	2	1	0	2	1	0	—	0
10P_A	2	1	0	2	1	0	2	1	—	1
100P_A	3	2	1	0	2	1	0	—	—	2
1KP_A	4	3	2	1	0	2	—	—	—	3
10KP_A	5	4	3	2	1	—	—	—	—	4
100KP_A	6	5	4	3	—	—	—	—	—	5
R	—	—	—	—	—	—	—	—	—	—

MEASUREMENT UNITS SITUATIONS (NOTES 3,5,6)

FUNCTION SWITCH	TIME BASE SWITCH: 0.1US	1US	10US	0.1mS	1mS	10mS	0.1S	1S	10S	EXT
M START	—	—	—	—	—	—	—	—	—	—
M STOP	—	—	—	—	—	—	—	—	—	—
F	*	MHz	MHz	MHz	KHz	KHz	KHz	KHz	KHz	X
1P_A	US	US	mS	mS	mS	SEC	SEC	SEC	*	—
10P_A	US	US	US	mS	mS	mS	SEC	SEC	*	—
100P_A	US	US	US	US	mS	mS	mS	*	*	—
1KP_A	US	US	US	US	US	mS	*	*	*	—
10KP_A	US	US	US	US	US	*	*	*	*	—
100KP_A	US	US	US	US	*	*	*	*	*	—
R	—	—	—	—	—	—	—	—	—	—

SOURCE OF DP AND MU CONTROLS (NOTES 5,6)

DP DESIGNATION	INTERNAL SOURCE	REMOTE CONTROL (J10 PIN NO)	MU DESIGNATION	INTERNAL SOURCE	REMOTE CONTROL (J10 PIN NO)
7	—	7	MHz	A2SIB (R-21/2)	13
6	A2SIE (R-5)	6	KHz	A2SIH (R-81/2)	12
5	A2SIE (R-8)	5	SEC	A2SIF (R-4)	14
4	A2SIE (F-7)	4	mS	A2SIG (R-7)	15
3	A2SID (R-6)	3	US	A2SIG (R-10)	16
2	A2SIC (F-7)	2	*	A2SIG (R-6)	11
1	A2SID (F-9)	1			
0	A2SIC (R-8)	10			

05245-D-7ABCDE

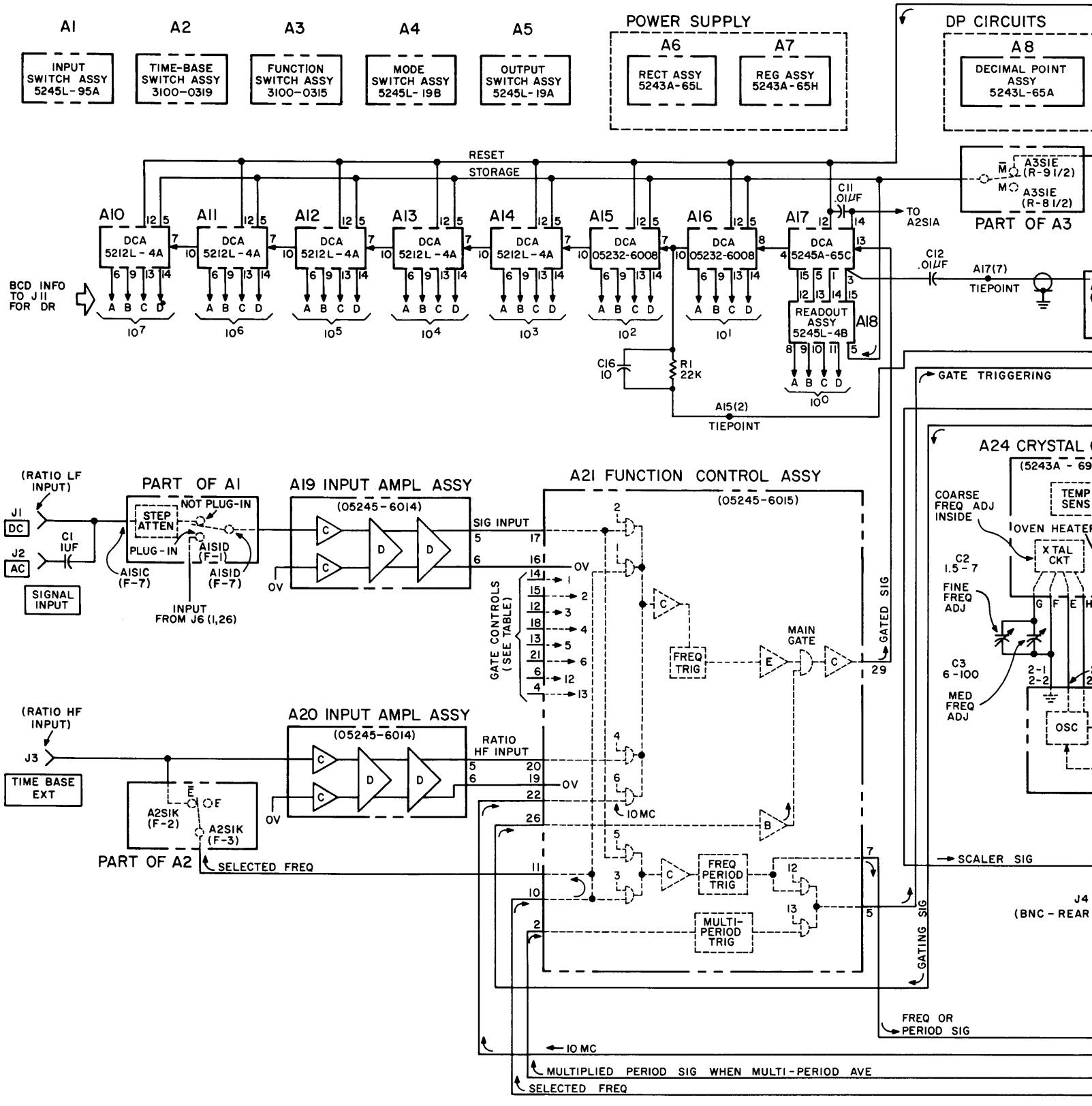
A1
INPUT SWITCH ASSY 5245L-95A
A2
TIME-BASE SWITCH ASSY 3100-0319
A3
FUNCTION SWITCH ASSY 3100-0315
A4
MODE SWITCH ASSY 5245L-198
A5
OUTPUT SWITCH ASSY 5245L-19A
POWER SUPPLY
A6
RECT ASSY 5243A-65L
A7
REG ASSY 5243A-65H
DP CIRCUITS
A8
DECIMAL POINT ASSY 5243L-65A
RESET
STORAGE
A3SIE (R-91/2)
A3SIE (R-81/2)
PART OF A3
A10
A11
A12
A13
A14
A15
A16
A17
DCA 5212L-4A
DCA 05232-6008
DCA 5245A-65C
C11 .01μF
TO A2SIA
C12 .01μF
A17(7) TIEPOINT
BCD INFO TO J11 FOR DR
READOUT ASSY 5245L-48
A18
C16 10
R1 22K
A15(2) TIEPOINT
GATE TRIGGERING
A24 CRYSTAL
(5243A-69
TEMP SENS
COARSE FREQ ADJ INSIDE
OVEN HEATER
XTAL CKT
C2 1.5-7
FINE FREQ ADJ
C3 6-100
MED FREQ ADJ
2-1
2-2
OSC
(RATIO LF INPUT)
J1
DC
J2
AC
SIGNAL INPUT
C1 1UF
PART OF A1
STEP ATTEN
NOT PLUG-IN
PLUG-IN
A1SID (F-1)
A1SIC (F-7)
A1SID (F-7)
INPUT FROM J6 (1,26)
A19 INPUT AMPL ASSY
(05245-6014)
SIG INPUT
A21 FUNCTION CONTROL ASSY
(05245-6015)
GATE CONTROLS (SEE TABLE)
FREQ TRIG
MAIN GATE
GATED SIG
(RATIO HF INPUT)
J3
TIME BASE EXT
A20 INPUT AMPL ASSY
(05245-6014)
RATIO HF INPUT
A2SIK (F-2)
A2SIK (F-3)
PART OF A2
SELECTED FREQ
10 MC
FREQ PERIOD TRIG
MULTI-PERIOD TRIG
SCALER SIG
GATING SIG
J4
(BNC-REAR
FREQ OR PERIOD SIG
10 MC
MULTIPLIED PERIOD SIG WHEN MULTI-PERIOD AVE
SELECTED FREQ

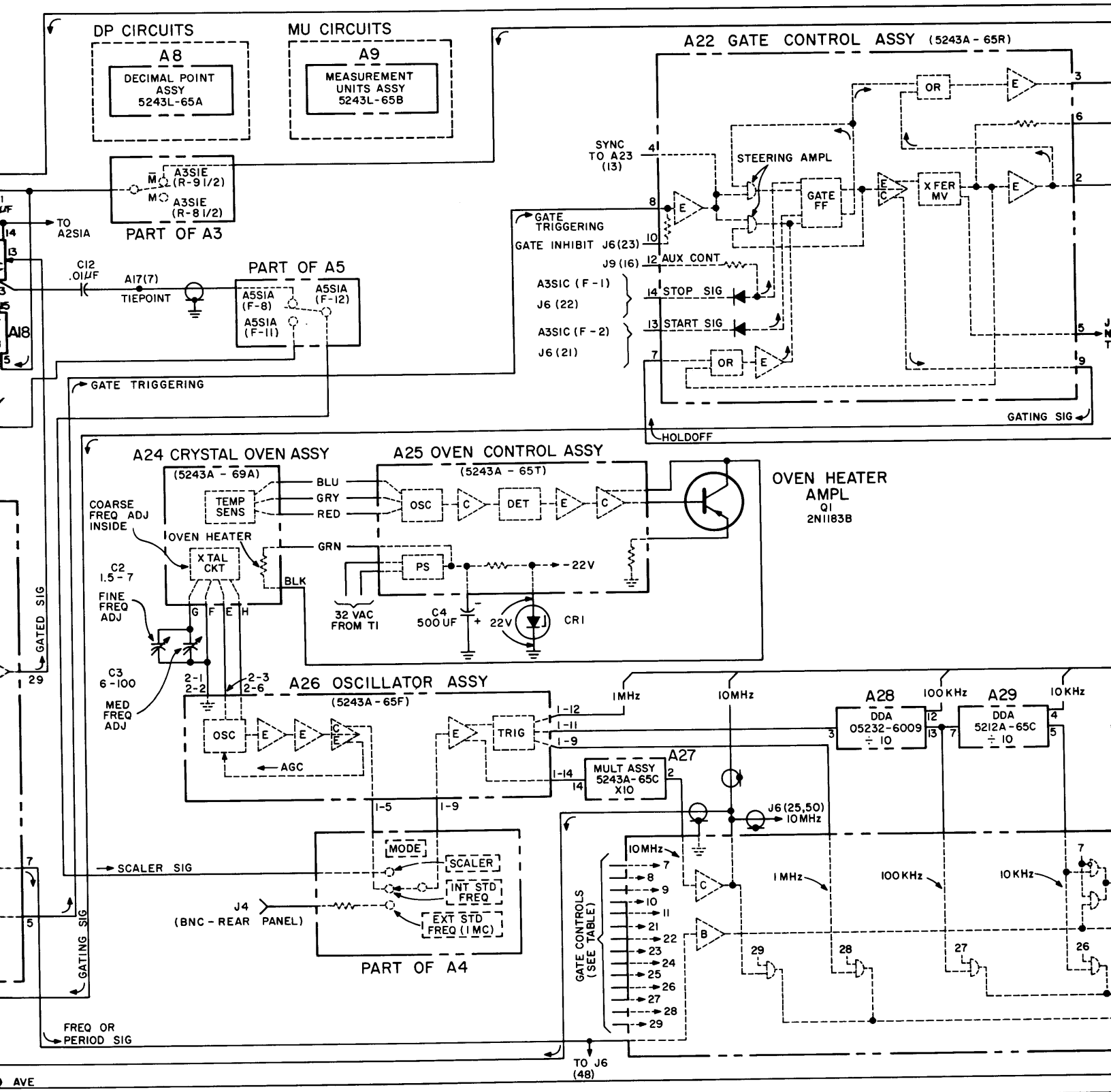
DP CIRCUITS
A8
DECIMAL POINT ASSY 5243L-65A
MU CIRCUITS
A9
MEASUREMENT UNITS ASSY 5243L-65B
A22 GATE CONTROL ASSY (5243A-65R)
A3S1E (R-9 1/2)
A3S1E (R-8 1/2)
PART OF A3
TO A2S1A
C12 .01μF
A17(7) TIEPOINT
PART OF A5
A5S1A (F-8)
A5S1A (F-12)
A5S1A (F-11)
SYNC TO A23 (13)
STEERING AMPL
GATE FF
XFER MV
OR
GATE TRIGGERING
GATE INHIBIT J6(23)
J9(16) AUX CONT
A3S1C (F-1) J6(22)
A3S1C (F-2) J6(21)
STOP SIG
START SIG
GATING SIG
HOLDOFF
A24 CRYSTAL OVEN ASSY (5243A-69A)
A25 OVEN CONTROL ASSY (5243A-65T)
TEMP SENS
BLU
GRY
RED
GRN
BLK
OSC
DET
PS
-22V
OVEN HEATER AMPL Q1 2N1183B
COARSE FREQ ADJ INSIDE
OVEN HEATER
XTAL CKT
C2 1.5-7
FINE FREQ ADJ
C3 6-100
MED FREQ ADJ
32 VAC FROM T1
C4 500 UF
22V
CR1
A26 OSCILLATOR ASSY (5243A-65F)
TRIG
AGC
1MHz
10MHz
100KHz
10KHz
A28 DDA 05232-6009 ÷10
A29 DDA 5212A-65C ÷10
A27 MULT ASSY 5243A-65C X10
J6(25,50) 10MHz
MODE
SCALER
INT STD FREQ
EXT STD FREQ (1MC)
J4 (BNC-REAR PANEL)
PART OF A4
SCALER SIG
GATED SIG
GATING SIG
GATE CONTROLS (SEE TABLE)
FREQ OR PERIOD SIG
TO J6 (48)

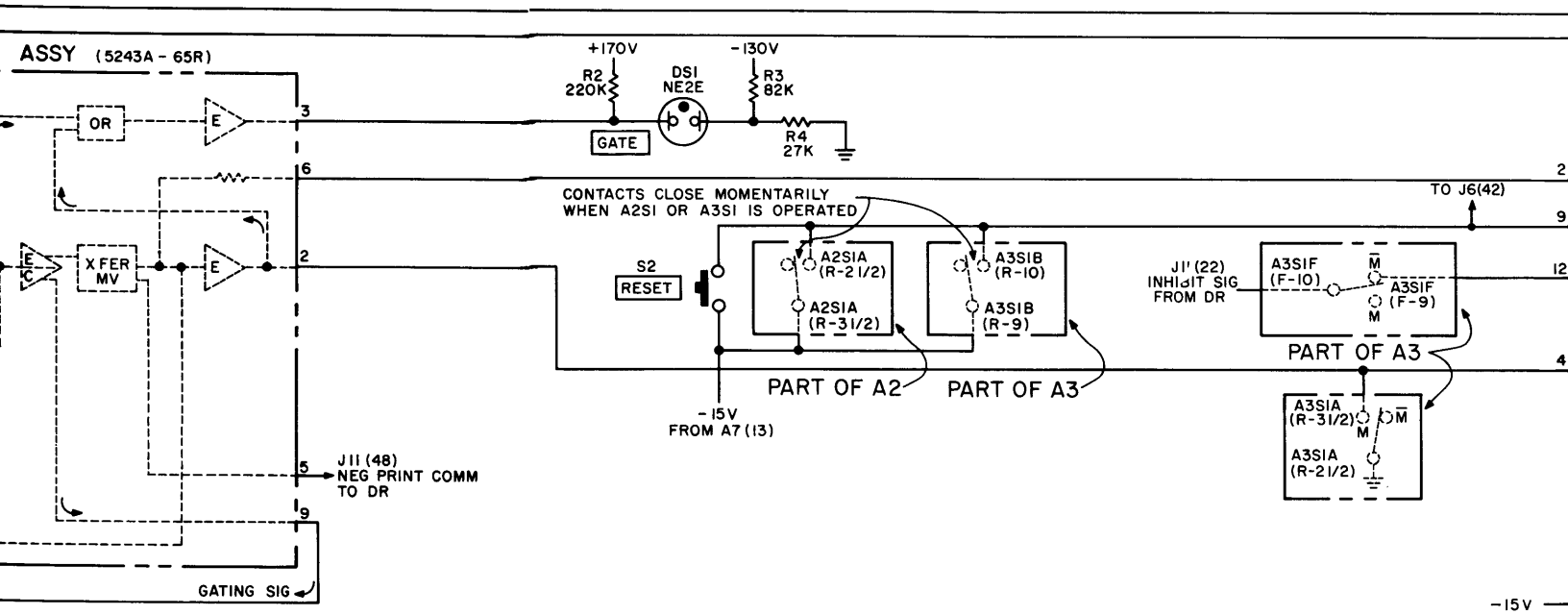

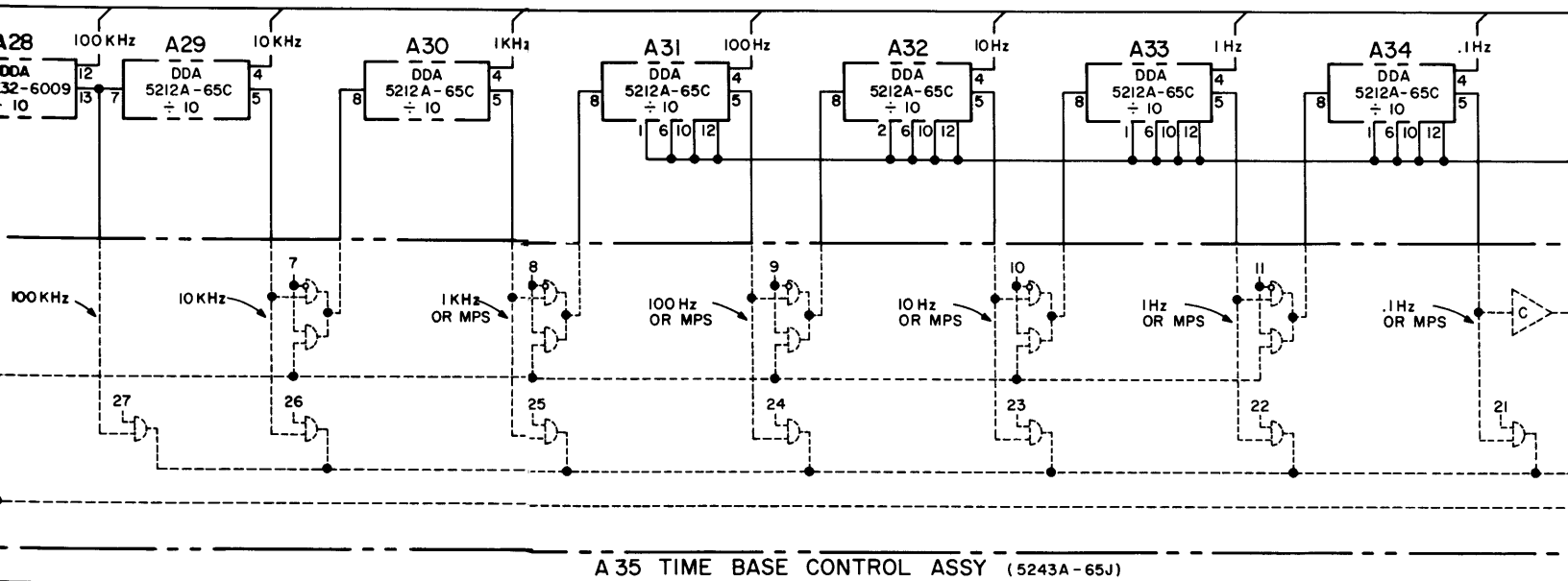

A 35 TIME BASE CONTROL ASSY (5243A-65J)

05245-D-7ABCDE

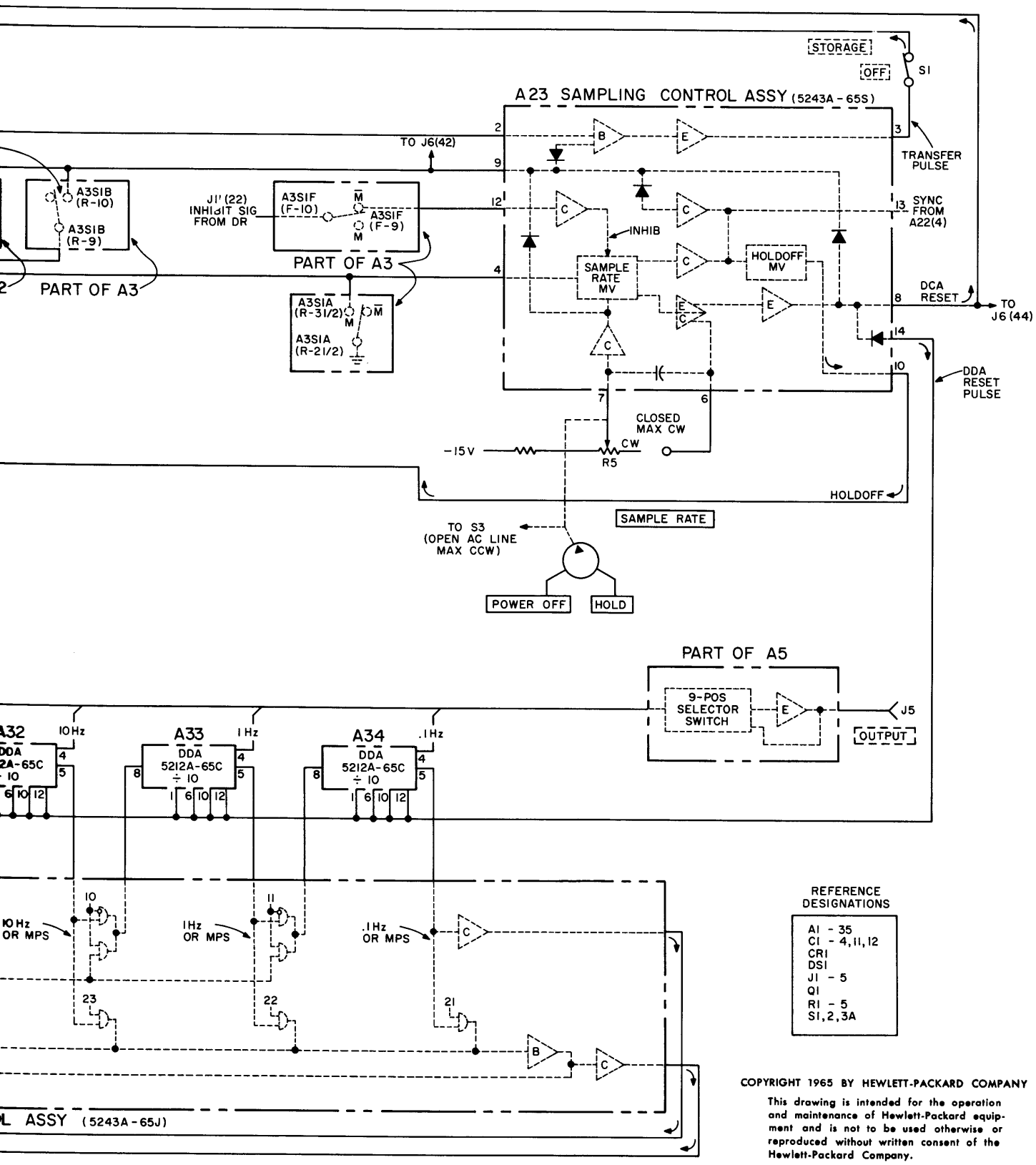

REFERENCE DESIGNATIONS

A1 - 35
C1 - 4,11,12
CR1
DS1
J1 - 5
Q1
R1 - 5
S1,2,3A

COPYRIGHT 1965 BY HEWLETT-PACKARD COMPANY

This drawing is intended for the operation and maintenance of Hewlett-Packard equipment and is not to be used otherwise or reproduced without written consent of the Hewlett-Packard Company.

Figure 7-2. Block Diagram

Figure 7-3

A1 INPUT SWITCH

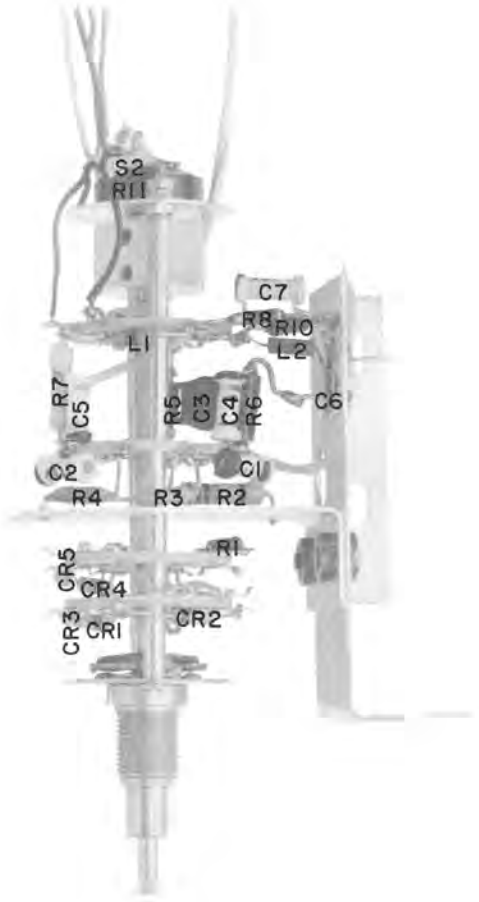

A1

NOTES

1. REFERENCE DESIGNATIONS WITHIN THIS ASSEMBLY ARE ABBREVIATED. ADD ASSEMBLY DESIGNATION AS PREFIX TO FORM COMPLETE DESIGNATION
2. UNLESS OTHERWISE INDICATED: RESISTANCE IN OHMS, CAPACITANCE IN PICOFARADS
3. EACH SWITCH SECTION SHOWN IN MAX CCW POS.
4. PICTORIAL DIAGRAM AS SEEN FROM FRONT OF SWITCH (KNOB END), REAR SECTION PROJECTED THRU WAFER
5. NUMBERED TERMINALS IN FUNCTIONAL SWITCH DIAGRAM CORRESPOND WITH NUMBERED TERMINALS IN PICTORIAL DIAGRAM
6. REFER TO NOTES ON OVERALL DIAGRAM FIG 6- FOR ABBREVIATIONS
7. A1S2 SHOWN IN PRESET POSITION (MAX CCW)

REFERENCE DESIGNATIONS

NO PREFIX	A1
C1,14 J1,2	C 1-7 CR1-5 L 1-2 R 1-11 S 1,2

02349-1
05245-A-40

AI INPUT SWITCH ASSEMBLY (05

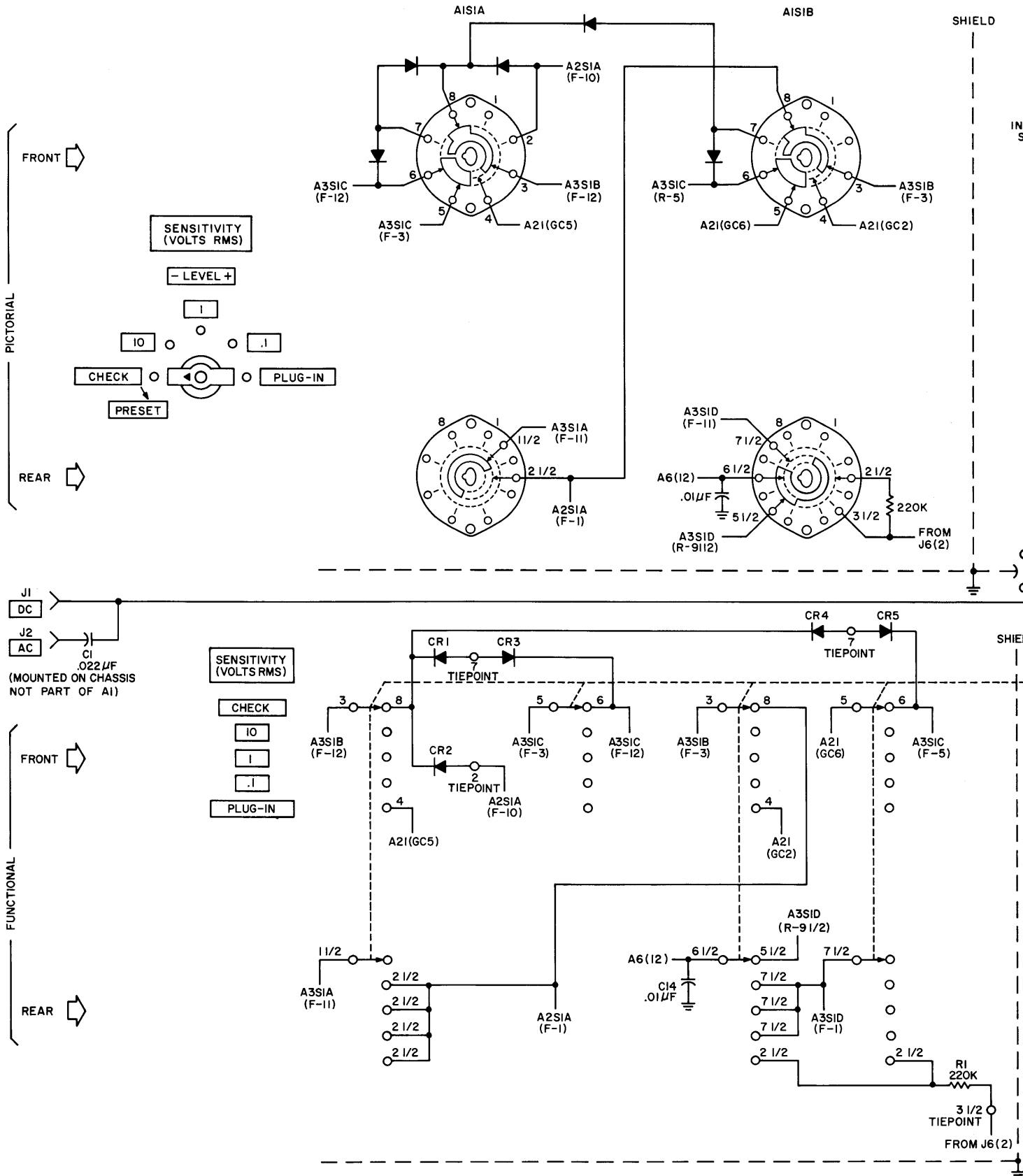

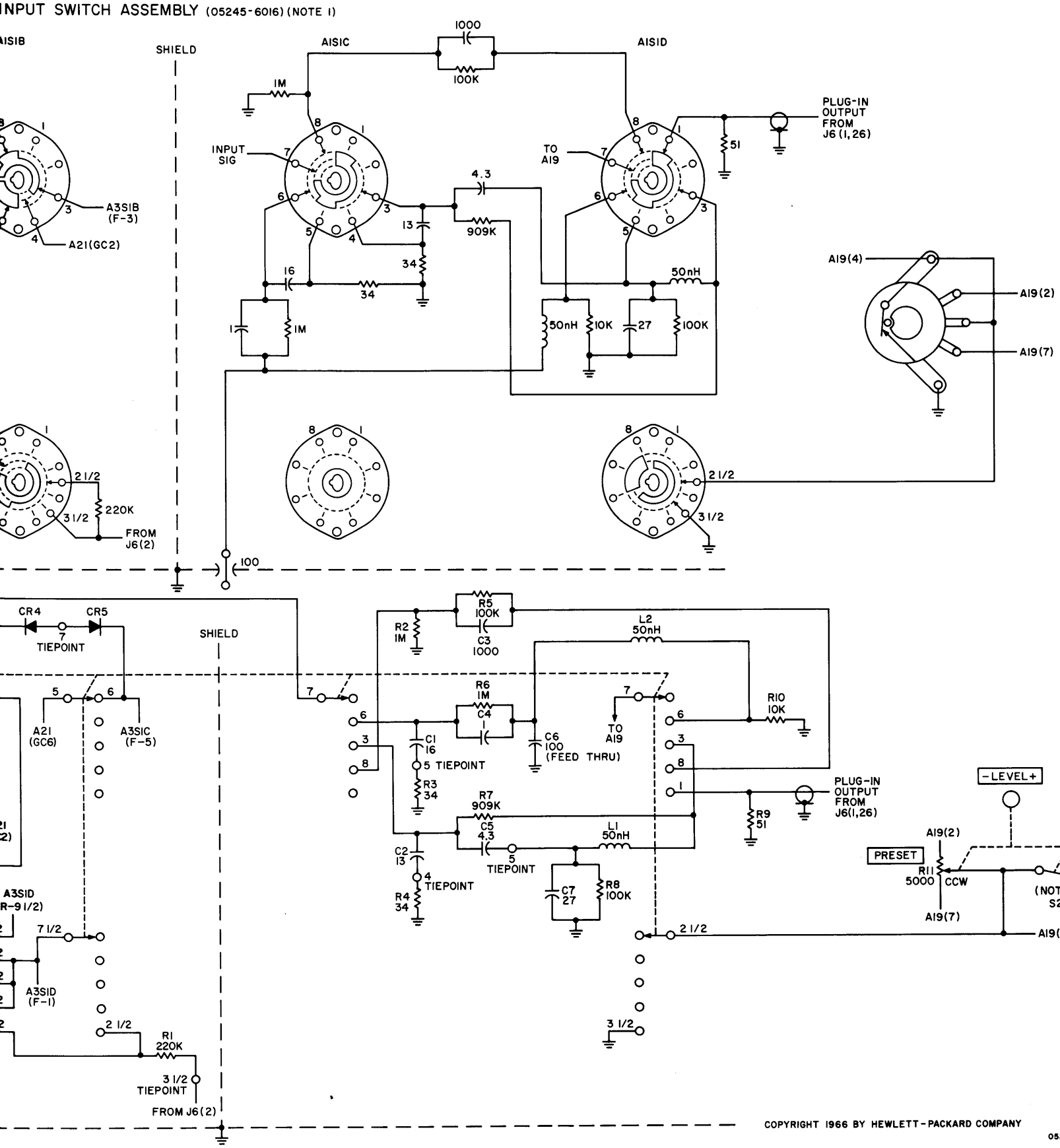
INPUT SWITCH ASSEMBLY (05245-6016) (NOTE 1)
A1S1B
SHIELD
A1S1C
A1S1D
1000
100K
1M
INPUT SIG
TO A19
PLUG-IN OUTPUT FROM J6 (1, 26)
51
4.3
909K
13
34
16
34
1
1M
50nH
10K
27
100K
A3S1B (F-3)
A21 (GC2)
A19(4)
A19(2)
A19(7)
2 1/2
220K
3 1/2
FROM J6(2)
100
CR4
CR5
7 TIEPOINT
SHIELD
R5 100K
R2 1M
C3 1000
L2 50nH
R6 1M
C4 1
C6 100 (FEED THRU)
TO A19
R10 10K
C1 16
5 TIEPOINT
R3 34
R7 909K
C5 4.3
L1 50nH
R9 51
PLUG-IN OUTPUT FROM J6(1,26)
-LEVEL+
A21 (GC6)
A3S1C (F-5)
C2 13
4 TIEPOINT
R4 34
5 TIEPOINT
C7 27
R8 100K
A19(2)
PRESET
R11 5000
CCW
(NOTE 7 S2
A19(7)
A19(4)
A3S1D (R-9 1/2)
7 1/2
A3S1D (F-1)
2 1/2
R1 220K
3 1/2 TIEPOINT
FROM J6(2)
3 1/2
COPYRIGHT 1966 BY HEWLETT-PACKARD COMPANY
05245-

Figu

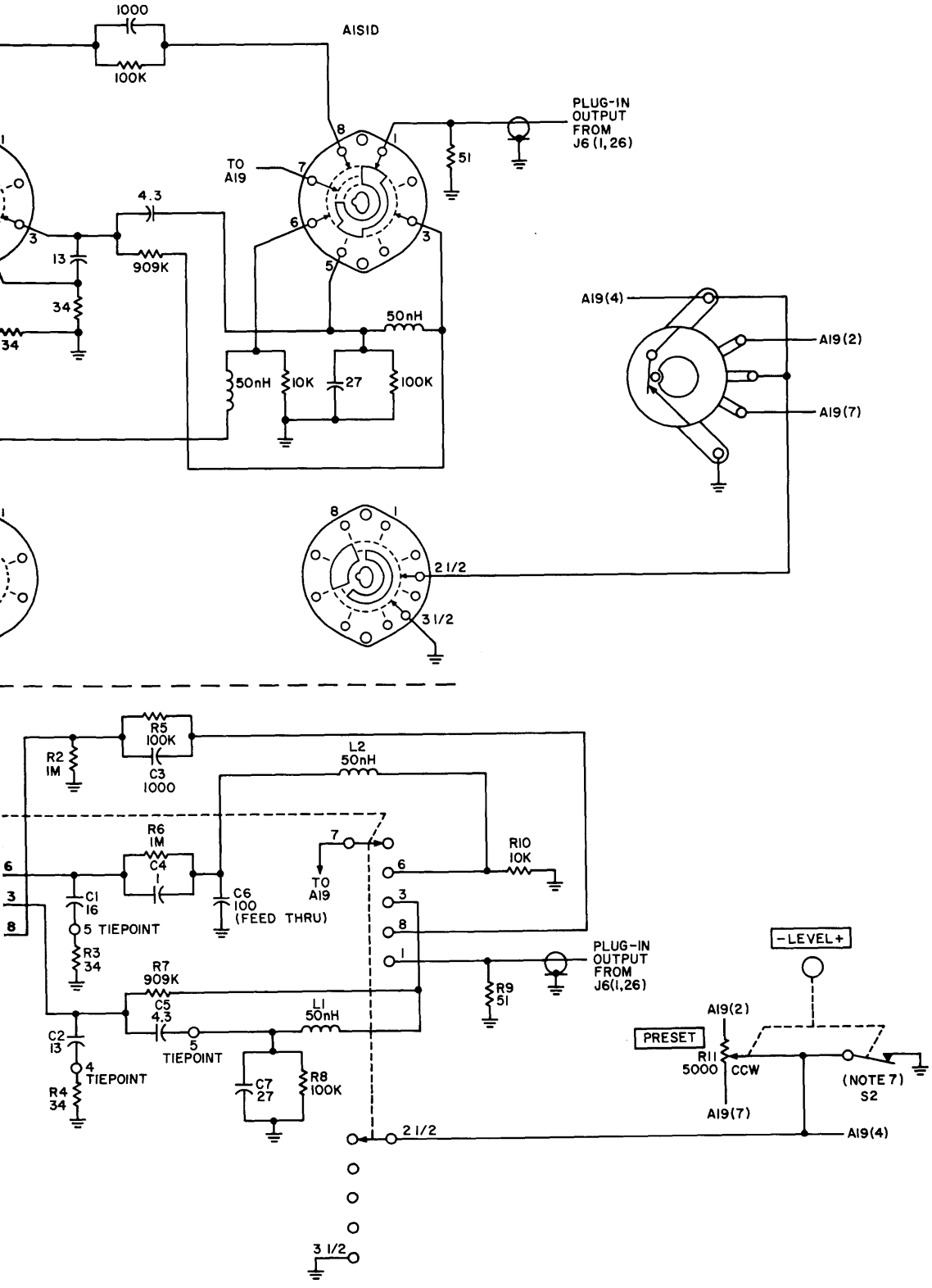

COPYRIGHT 1966 BY HEWLETT-PACKARD COMPANY

05245-D-49

Figure 7-3. A1 Input Switch

Figure 7-4

A2 TIME BASE SWITCH

7-7/7-8

NOTES

1. UNLESS OTHERWISE INDICATED: RESISTANCE IN OHMS, CAPACITANCE IN PICOFARADS
2. EACH SWITCH SECTION SHOWN IN MAX CCW POSITION
3. PICTORIAL DIAGRAM AS SEEN FROM FRONT OF SWITCH (KNOB END); REAR SECTION PROJECTED THRU WAFER
4. NUMBERED TERMINALS IN FUNCTIONAL SWITCH DIAGRAM CORRESPOND WITH NUMBERED TERMINALS IN PICTORIAL DIAGRAM
5. REFER TO NOTES ON OVERALL DIAGRAM FIG. 7-2 FOR ABBREVIATIONS
6. **WAVEFORMS SHOWN WERE OBTAINED WITH FUNCTION SWITCH AT MANUAL START,** SENSITIVITY SWITCH AT CHECK. OUTPUT SWITCH WAS ROTATED FROM 100 CPS POSITION TO 10MC POSITION

(NOTE 6)

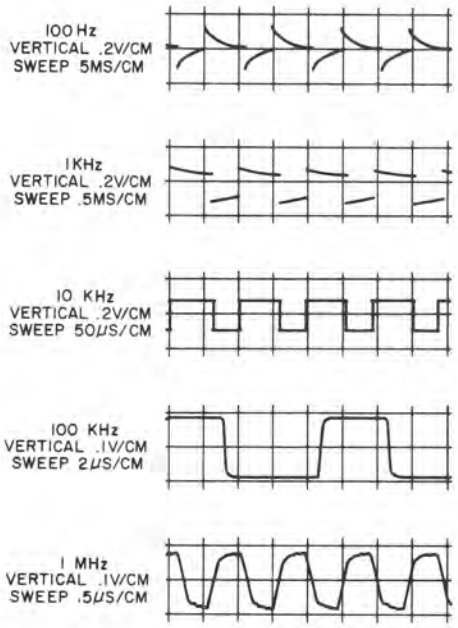



A2

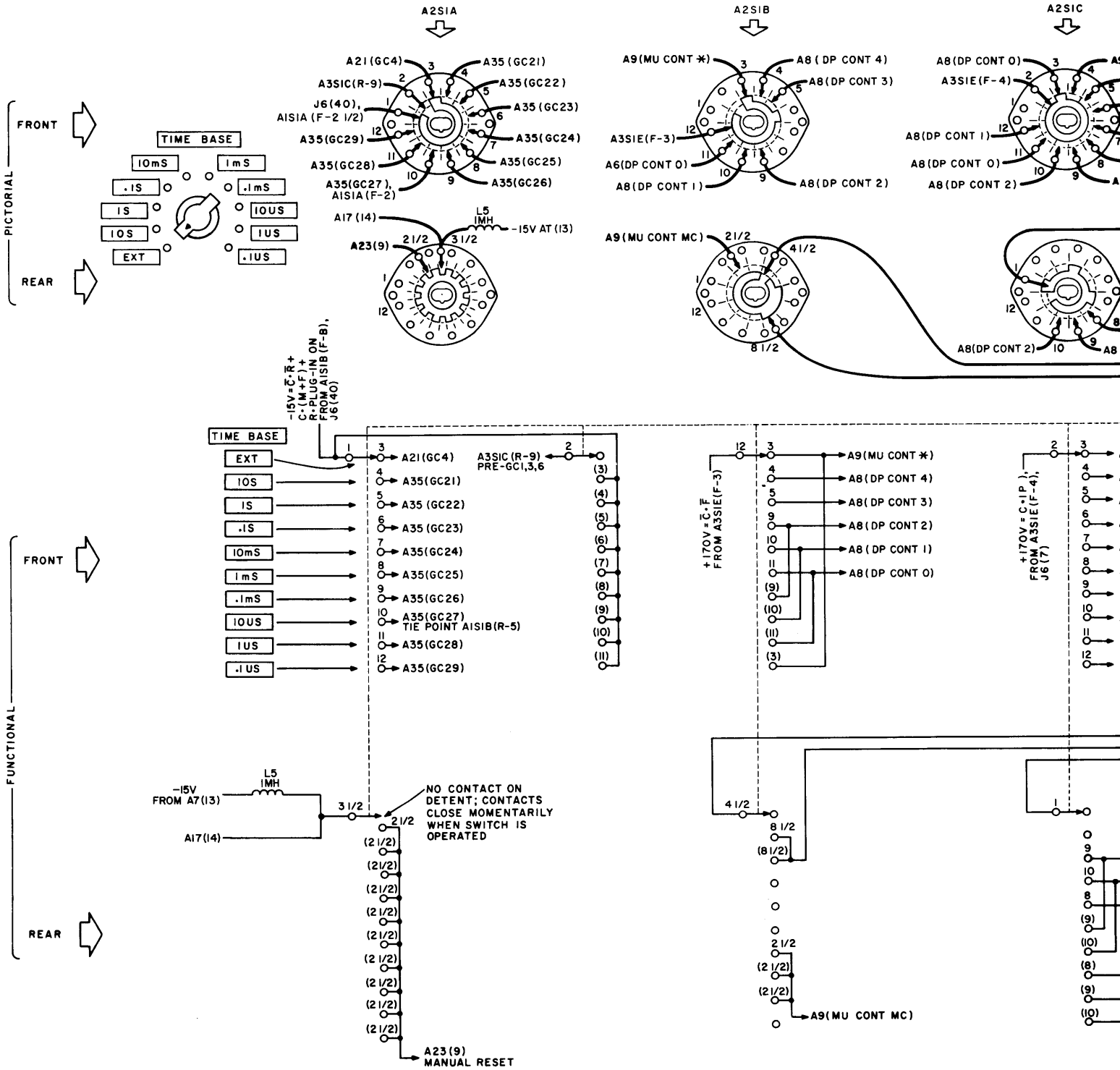
A2SIA
A2SIB
A2SIC
PICTORIAL
FRONT
REAR
TIME BASE
10mS
1mS
.1S
.1mS
1S
10US
10S
1US
EXT
.1US
A21(GC4)
A35(GC21)
A3SIC(R-9)
A35(GC22)
J6(40), AISIA(F-2 1/2)
A35(GC23)
A35(GC29)
A35(GC24)
A35(GC28)
A35(GC25)
A35(GC27), AISIA(F-2)
A35(GC26)
A17(14)
L5 1MH
-15V AT (13)
A23(9)
2 1/2
3 1/2
A9(MU CONT *)
A8(DP CONT 4)
A8(DP CONT 3)
A3SIE(F-3)
A6(DP CONT 0)
A8(DP CONT 1)
A8(DP CONT 2)
A8(DP CONT 0)
A3SIE(F-4)
A8(DP CONT 1)
A9(MU CONT MC)
4 1/2
8 1/2
FUNCTIONAL
-15V = C̄·R +
C·(M+F) +
R·PLUG-IN ON
FROM AISIB(F-8),
J6(40)
A3SIC(R-9)
PRE-GC1,3,6
+17OV = C̄·F̄
FROM A3SIE(F-3)
+17OV = C·1P,
FROM A3SIE(F-4),
J6(7)
-15V
FROM A7(13)
NO CONTACT ON DETENT; CONTACTS CLOSE MOMENTARILY WHEN SWITCH IS OPERATED
TIE POINT AISIB(R-5)
A23(9)
MANUAL RESET

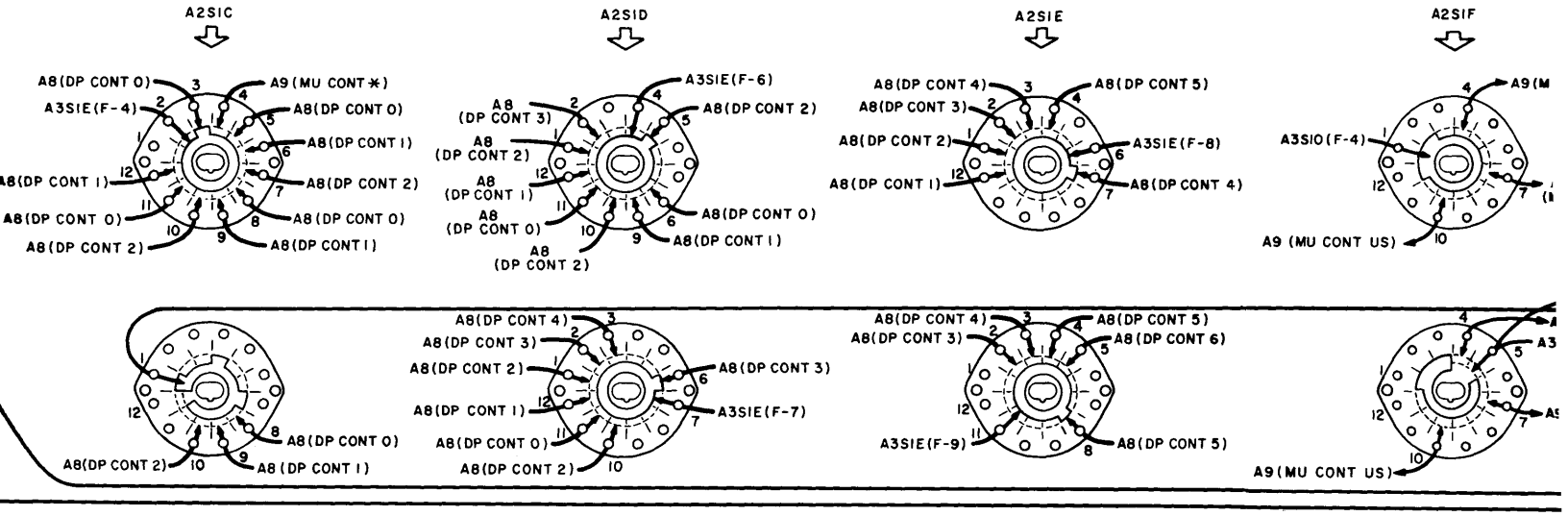
A2SIC
A8(DP CONT 0)
A9 (MU CONT *)
A3SIE(F-4)
A8(DP CONT 0)
A8(DP CONT 1)
A8(DP CONT 1)
A8(DP CONT 2)
A8(DP CONT 0)
A8(DP CONT 0)
A8(DP CONT 2)
A8(DP CONT 1)
A2SID
A3SIE(F-6)
A8 (DP CONT 3)
A8(DP CONT 2)
A8 (DP CONT 2)
A8 (DP CONT 1)
A8(DP CONT 0)
A8 (DP CONT 0)
A8(DP CONT 1)
A8 (DP CONT 2)
A2SIE
A8(DP CONT 4)
A8(DP CONT 5)
A8(DP CONT 3)
A8(DP CONT 2)
A3SIE(F-8)
A8(DP CONT 1)
A8(DP CONT 4)
A2SIF
A9(M
A3SIO(F-4)
A9 (MU CONT US)
A8(DP CONT 0)
A8(DP CONT 2)
A8 (DP CONT 1)
A8(DP CONT 4)
A8(DP CONT 3)
A8(DP CONT 2)
A8(DP CONT 1)
A8(DP CONT 0)
A8(DP CONT 2)
A8(DP CONT 3)
A3SIE(F-7)
A8(DP CONT 4)
A8(DP CONT 5)
A8(DP CONT 3)
A8(DP CONT 6)
A3SIE(F-9)
A8(DP CONT 5)
A9(MU CONT US)

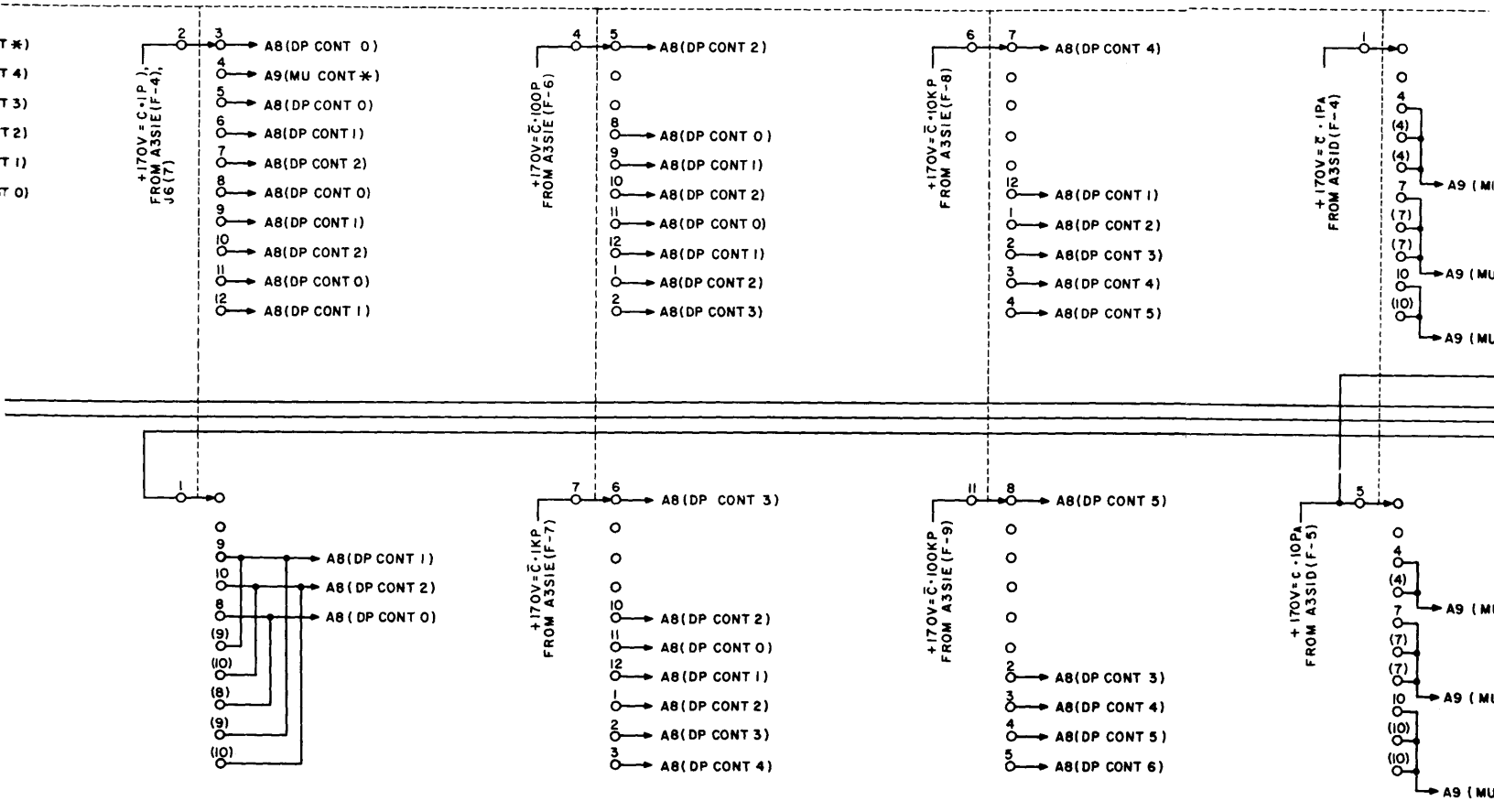
+17OV=C·1P
FROM A3SIE(F-4),
J6(7)
A8(DP CONT 0)
A9(MU CONT *)
A8(DP CONT 0)
A8(DP CONT 1)
A8(DP CONT 2)
A8(DP CONT 0)
A8(DP CONT 1)
A8(DP CONT 2)
A8(DP CONT 0)
A8(DP CONT 1)
+17OV=C·100P
FROM A3SIE(F-6)
A8(DP CONT 2)
A8(DP CONT 0)
A8(DP CONT 1)
A8(DP CONT 2)
A8(DP CONT 0)
A8(DP CONT 1)
A8(DP CONT 2)
A8(DP CONT 3)
+17OV=C·10KP
FROM A3SIE(F-8)
A8(DP CONT 4)
A8(DP CONT 1)
A8(DP CONT 2)
A8(DP CONT 3)
A8(DP CONT 4)
A8(DP CONT 5)
+17OV=C·1PA
FROM A3SID(F-4)
A9 (MI
A9 (MU
A9 (MU
A8(DP CONT 1)
A8(DP CONT 2)
A8(DP CONT 0)
+17OV=C·1KP
FROM A3SIE(F-7)
A8(DP CONT 3)
A8(DP CONT 2)
A8(DP CONT 0)
A8(DP CONT 1)
A8(DP CONT 2)
A8(DP CONT 3)
A8(DP CONT 4)
+17OV=C·100KP
FROM A3SIE(F-9)
A8(DP CONT 5)
A8(DP CONT 3)
A8(DP CONT 4)
A8(DP CONT 5)
A8(DP CONT 6)
+17OV=C·10PA
FROM A3SID(F-5)
A9 (MI
A9 (MI
A9 (MU
05245-D-1A

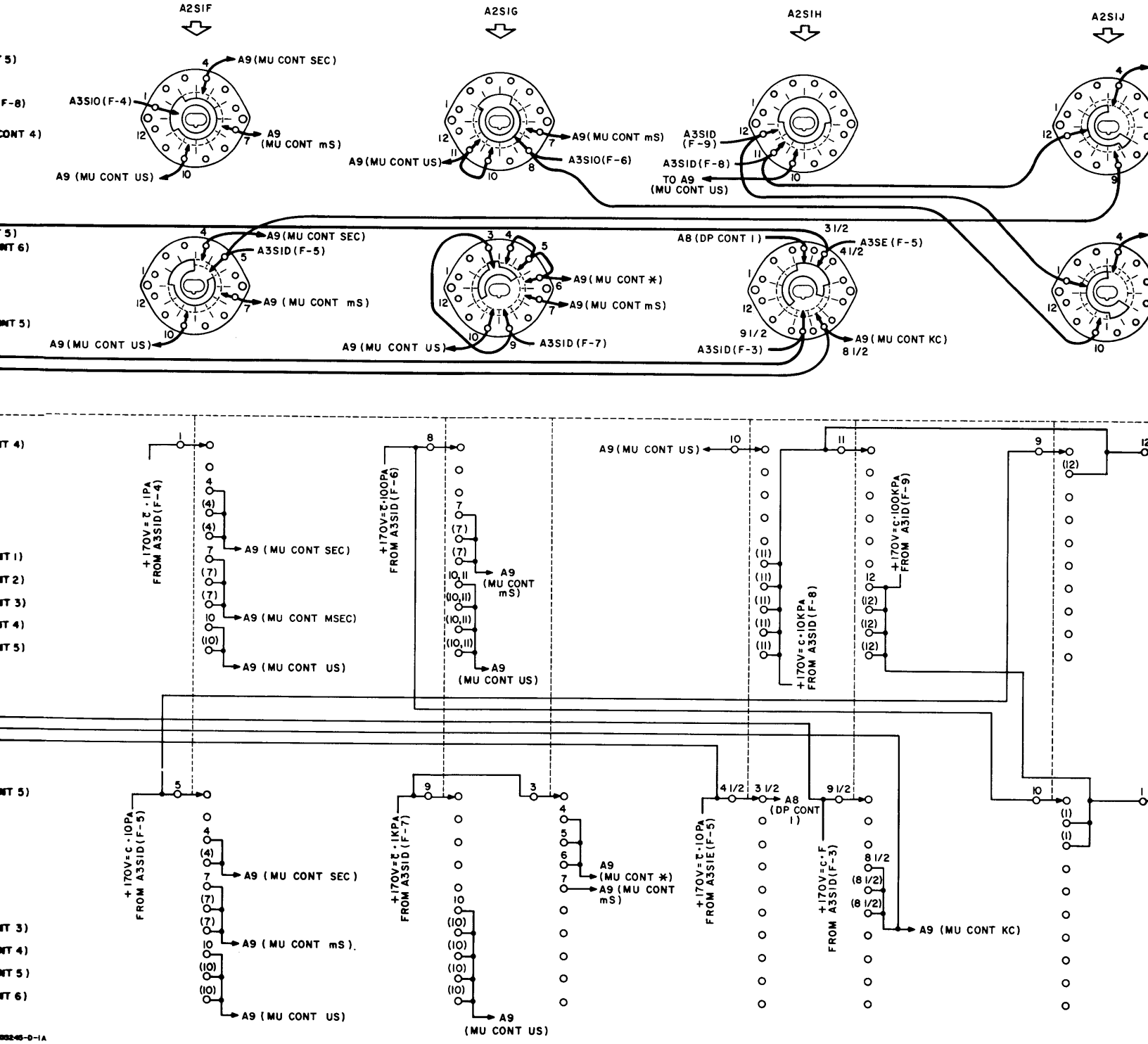

COPYRIGHT 1965 BY HEWLETT-PACKARD

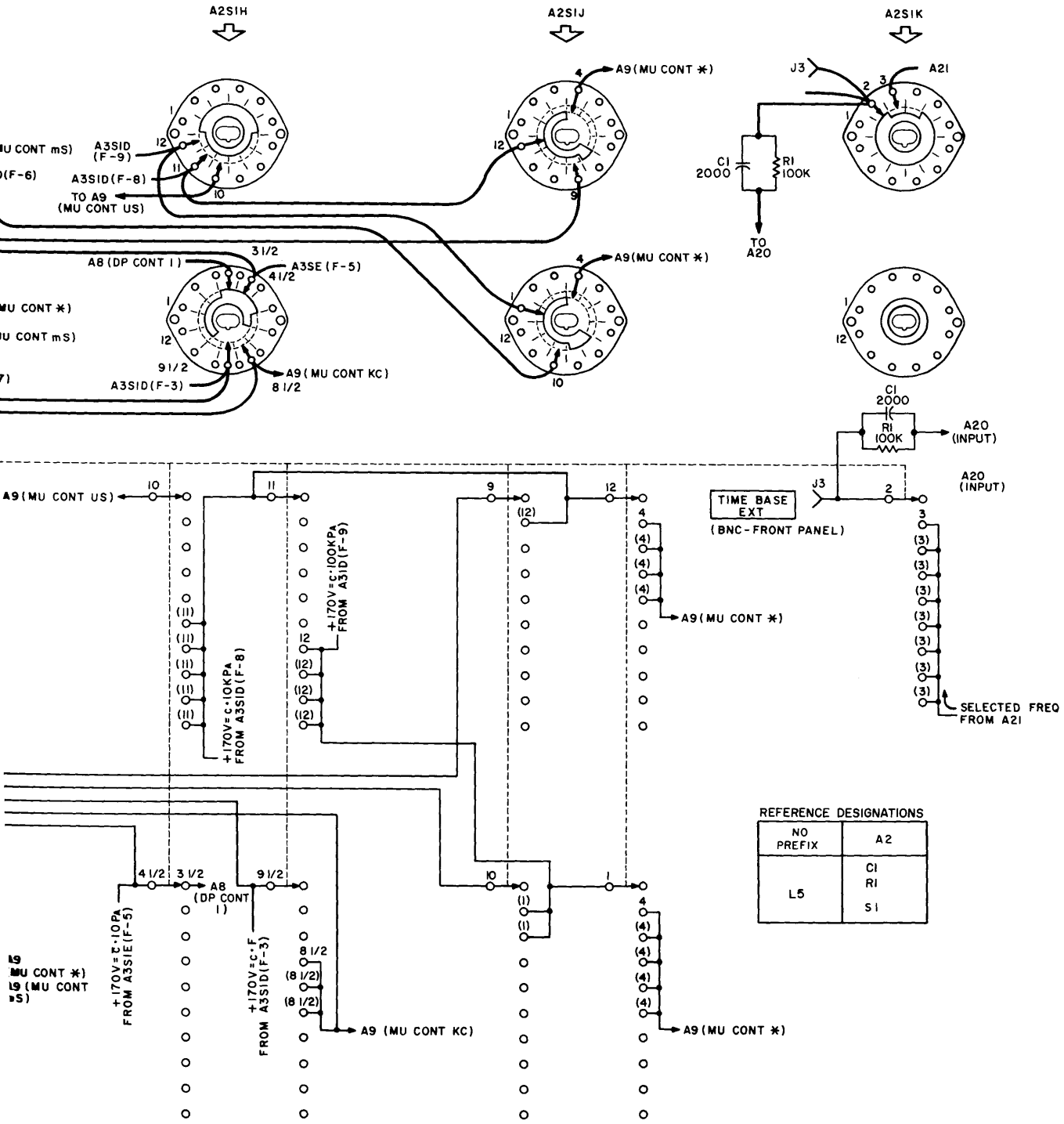

COPYRIGHT 1965 BY HEWLETT-PACKARD COMPANY

Figure 7-4. A2 Time Base Switch

Figure 7-5

A3 FUNCTION SWITCH



A3

NOTES

1. UNLESS OTHERWISE INDICATED: RESISTANCE IN OHMS,
2. EACH SWITCH SECTION SHOWN IN MAX CCW POSITION
3. PICTORIAL DIAGRAM AS SEEN FROM FRONT OF SWITCH (KNOB END); REAR SECTION PROJECTED THRU WAFER
4. NUMBERED TERMINALS IN FUNCTIONAL SWITCH DIAGRAM CORRESPOND WITH NUMBERED TERMINALS IN PICTORIAL DIAGRAM
5. REFER TO NOTES ON FIG 7-2 (OVERALL DIAGRAM) FOR ABBREVIATIONS

REFERENCE DESIGNATIONS

A3R1-2 A3S1

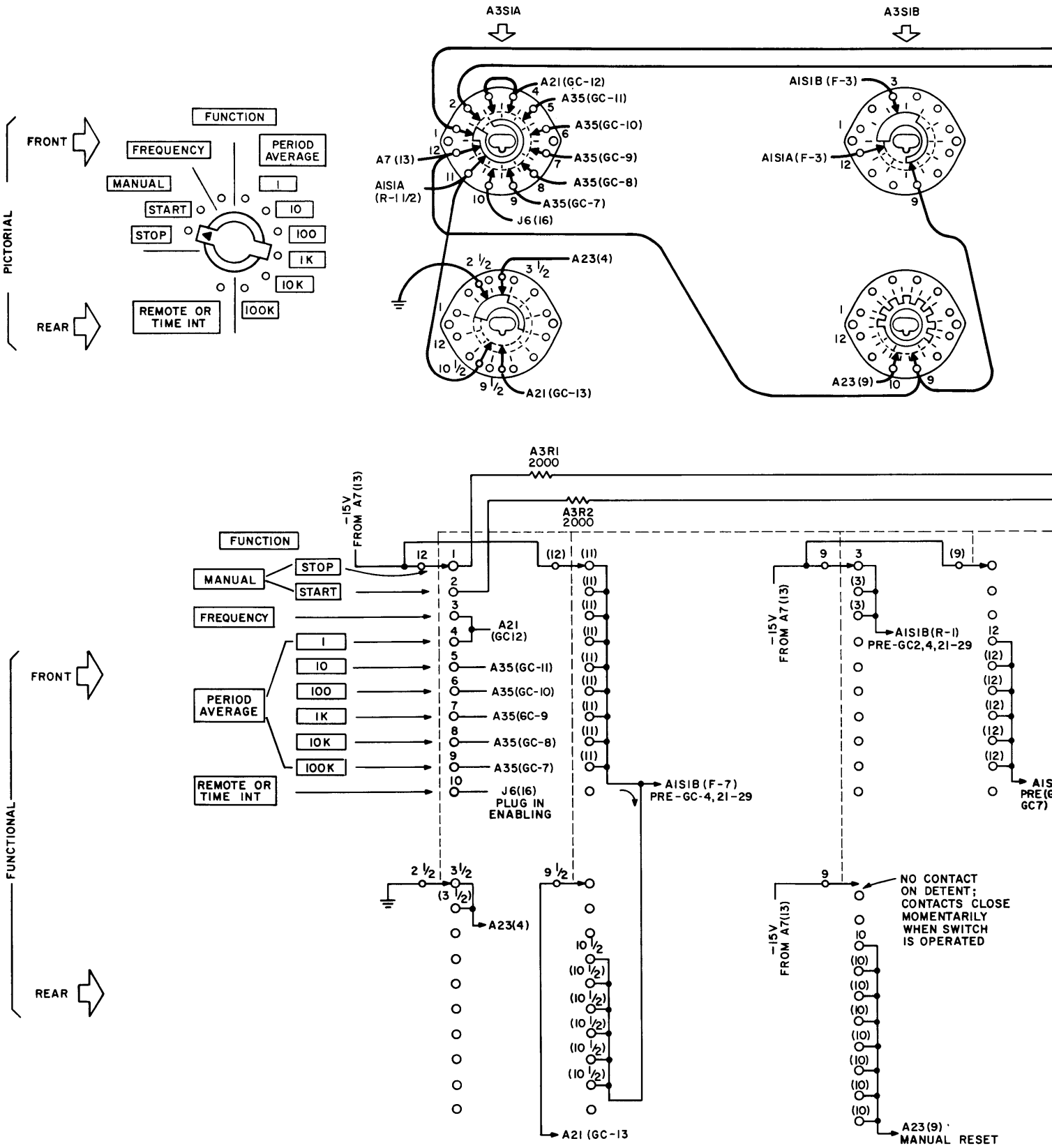
PICTORIAL
FRONT
REAR
FUNCTION
FREQUENCY
PERIOD AVERAGE
MANUAL
START
STOP
1
10
100
1K
10K
100K
REMOTE OR TIME INT
A3S1A
A3S1B
A21(GC-12)
A35(GC-11)
A35(GC-10)
A35(GC-9)
A35(GC-8)
A35(GC-7)
J6(16)
A7(13)
A1S1A (R-11/2)
A23(4)
A21(GC-13)
A1S1B(F-3)
A1S1A(F-3)
A23(9)
FUNCTIONAL
FRONT
REAR
A3R1 2000
A3R2 2000
-15V FROM A7(13)
FUNCTION
MANUAL
STOP
START
FREQUENCY
PERIOD AVERAGE
1
10
100
1K
10K
100K
REMOTE OR TIME INT
A21 (GC12)
A35(GC-11)
A35(GC-10)
A35(6C-9
A35(GC-8)
A35(GC-7)
J6(16) PLUG IN ENABLING
A1S1B (F-7) PRE-GC-4,21-29
A23(4)
A21 (GC-13
A1S1B(R-1) PRE-GC2,4,21-29
NO CONTACT ON DETENT; CONTACTS CLOSE MOMENTARILY WHEN SWITCH IS OPERATED
A23(9) MANUAL RESET

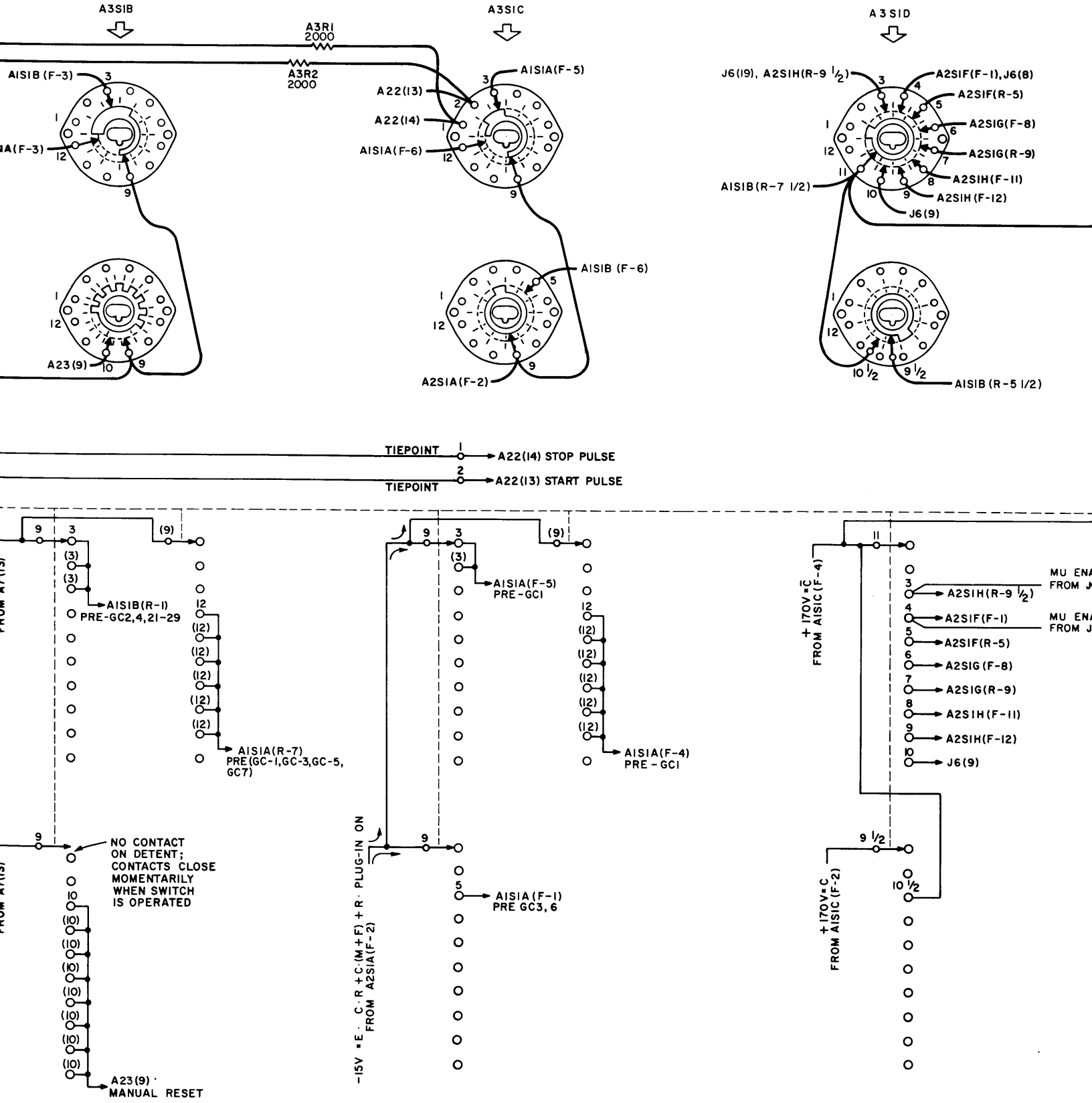
A3S1B
A3R1
2000
A3R2
2000
A3S1C
A3S1D
A1S1B (F-3)
A1S1A(F-3)
A22(13)
A22(14)
A1S1A(F-5)
A1S1A(F-6)
A23(9)
A2S1A(F-2)
A1S1B (F-6)
J6(19), A2S1H(R-9 1/2)
A2S1F(F-1),J6(8)
A2S1F(R-5)
A2S1G(F-8)
A2S1G(R-9)
A2S1H(F-11)
A2S1H(F-12)
J6(9)
A1S1B(R-7 1/2)
A1S1B(R-5 1/2)
TIEPOINT 1
A22(14) STOP PULSE
TIEPOINT 2
A22(13) START PULSE
A1S1B(R-1)
PRE-GC2,4,21-29
A1S1A(R-7)
PRE(GC-1,GC-3,GC-5,
GC7)
NO CONTACT
ON DETENT;
CONTACTS CLOSE
MOMENTARILY
WHEN SWITCH
IS OPERATED
A23(9)
MANUAL RESET
A1S1A(F-5)
PRE-GC1
A1S1A(F-4)
PRE-GC1
A1S1A(F-1)
PRE GC3, 6
-15V = E · C · R + C · (M+F) + R · PLUG-IN ON
FROM A2S1A(F-2)
+170V = C̄
FROM A1S1C(F-4)
+170V = C
FROM A1S1C(F-2)
A2S1H(R-9 1/2)
A2S1F(F-1)
A2S1F(R-5)
A2S1G(F-8)
A2S1G(R-9)
A2S1H(F-11)
A2S1H(F-12)
J6(9)

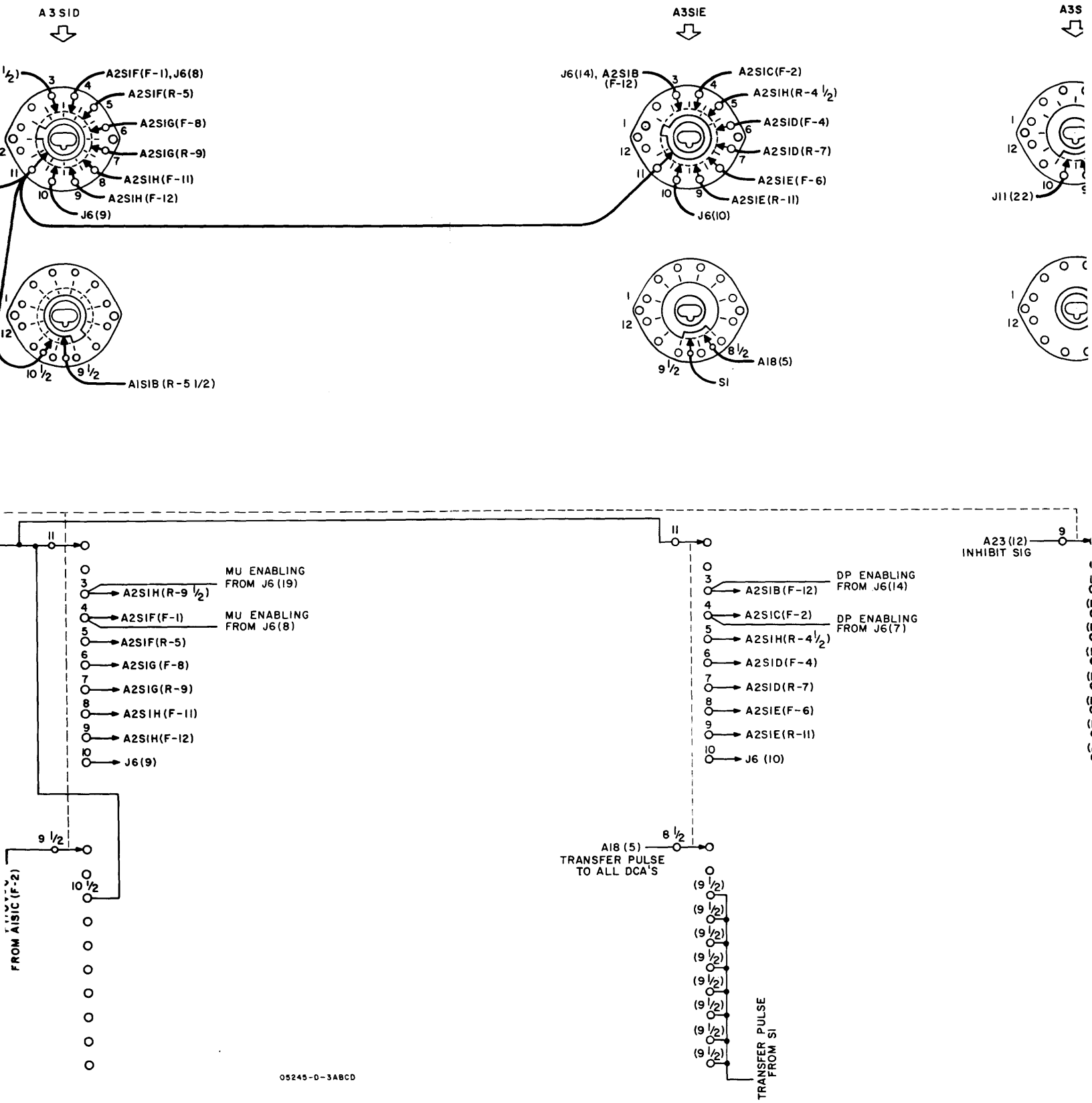

COPYRIGHT 1965 BY HEWLETT-PACKARD COMPANY

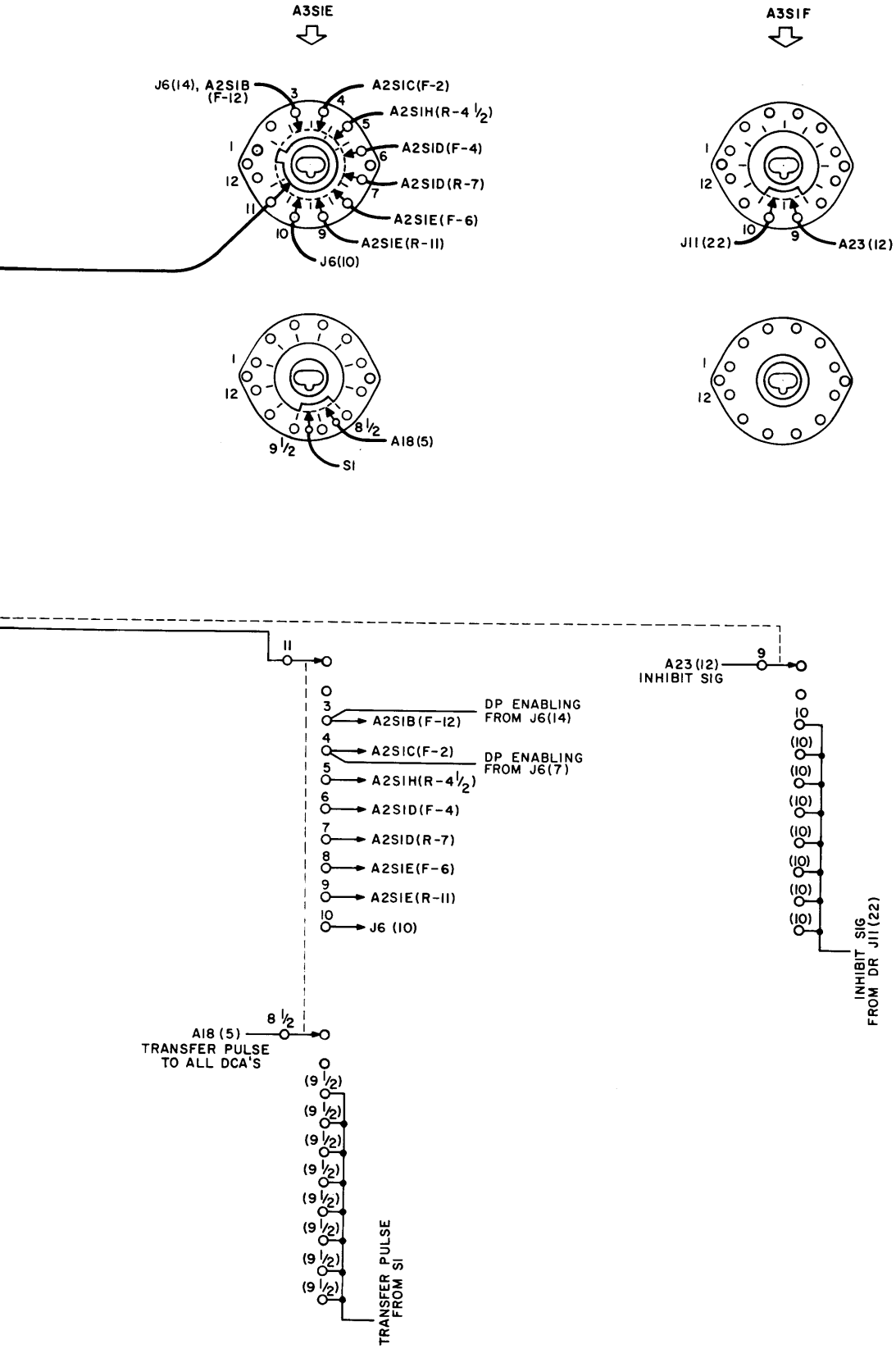

COPYRIGHT 1965 BY HEWLETT-PACKARD COMPANY

05245-D-4AB

Figure 7-5. A3 Function Switch

(NOTE 7)

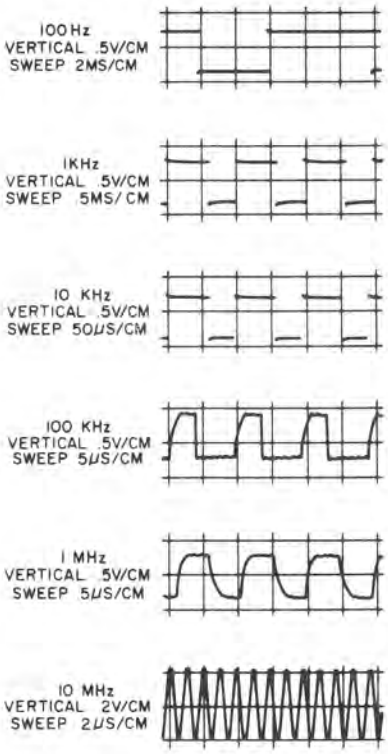

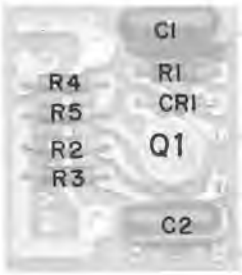

A5

NOTES

1. UNLESS OTHERWISE INDICATED: RESISTANCE IN OHMS, CAPACITANCE IN PICOFARADS, RESISTORS 1/4 WATT
2. EACH SWITCH SECTION SHOWN IN MAX CCW POSITION
3. PICTORIAL DIAGRAM AS SEEN FROM FRONT OF SWITCH (KNOB END); REAR SECTION PROJECTED THRU WAFER
4. NUMBERED TERMINALS IN FUNCTIONAL SWITCH DIAGRAM CORRESPOND WITH NUMBERED TERMINALS IN PICTORIAL DIAGRAM
5. REFER TO NOTES ON OVERALL DIAGRAM FOR ABBREVIATIONS
6. DOT (•) INDICATES CATHODE
7. WAVEFORMS SHOWN WERE OBTAINED WITH FUNCTION SWITCH AT MANUAL START, SENSITIVITY SWITCH AT CHECK. OUTPUT SWITCH WAS ROTATED FROM 100Hz POSITION TO 10MHz POSITION

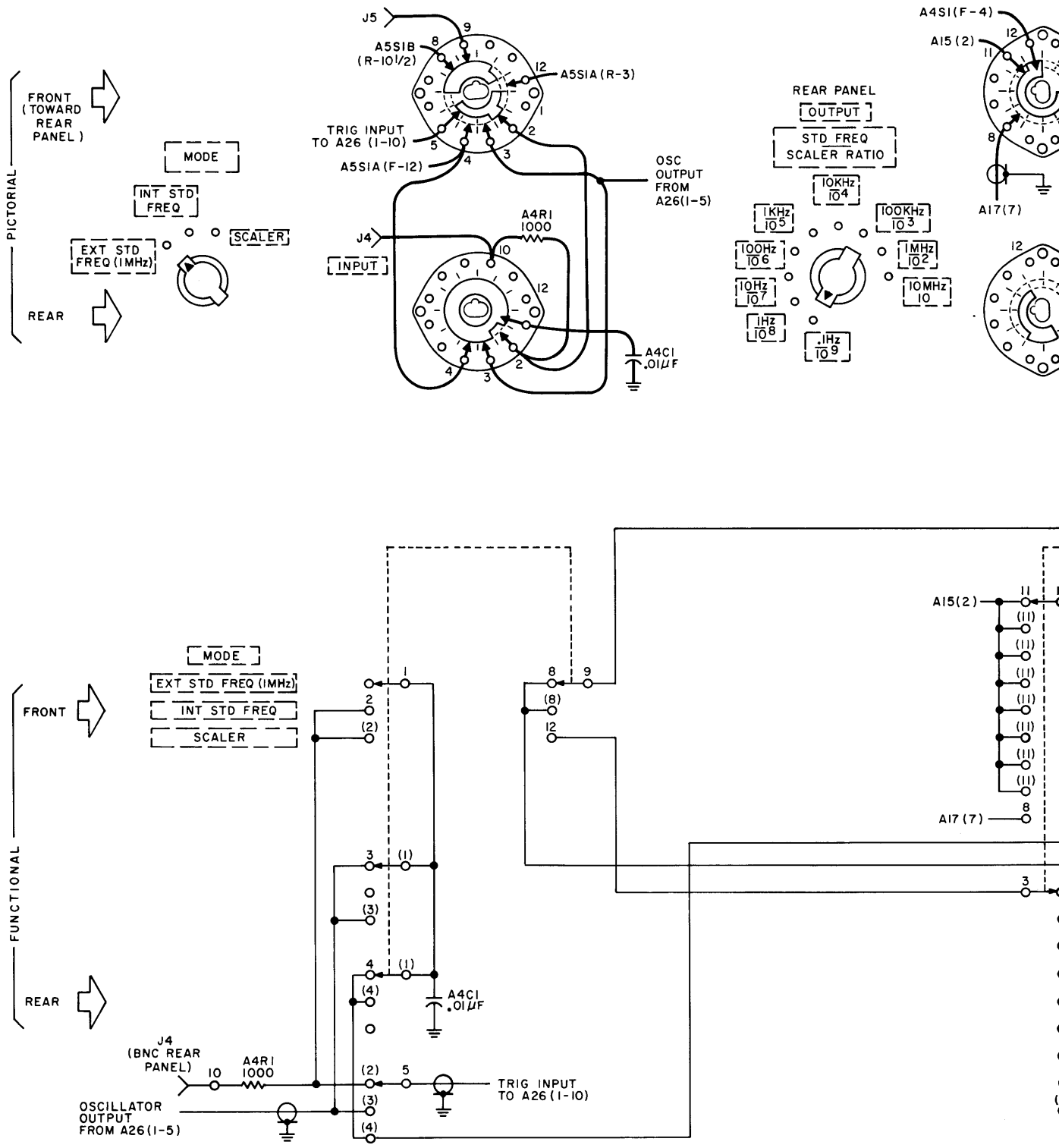
A4 MODE SWITCH ASSY (5245L-198)
A4S1
A5 OUTPUT SWITC
A5SIA
PICTORIAL
FRONT (TOWARD REAR PANEL)
REAR
MODE
INT STD FREQ
EXT STD FREQ (1MHz)
SCALER
J5
A5S1B (R-101/2)
A5S1A (R-3)
TRIG INPUT TO A26 (1-10)
A5S1A (F-12)
OSC OUTPUT FROM A26(1-5)
J4
INPUT
A4R1 1000
A4C1 .01μF
REAR PANEL
OUTPUT
STD FREQ SCALER RATIO
10KHz 10^4
1KHz 10^5
100KHz 10^3
100Hz 10^6
1MHz 10^2
10Hz 10^7
10MHz 10
1Hz 10^8
.1Hz 10^9
A4S1(F-4)
A15(2)
A17(7)
FUNCTIONAL
FRONT
REAR
MODE
EXT STD FREQ (1MHz)
INT STD FREQ
SCALER
J4 (BNC REAR PANEL)
A4R1 1000
A4C1 .01μF
OSCILLATOR OUTPUT FROM A26(1-5)
TRIG INPUT TO A26(1-10)
A15(2)
A17(7)

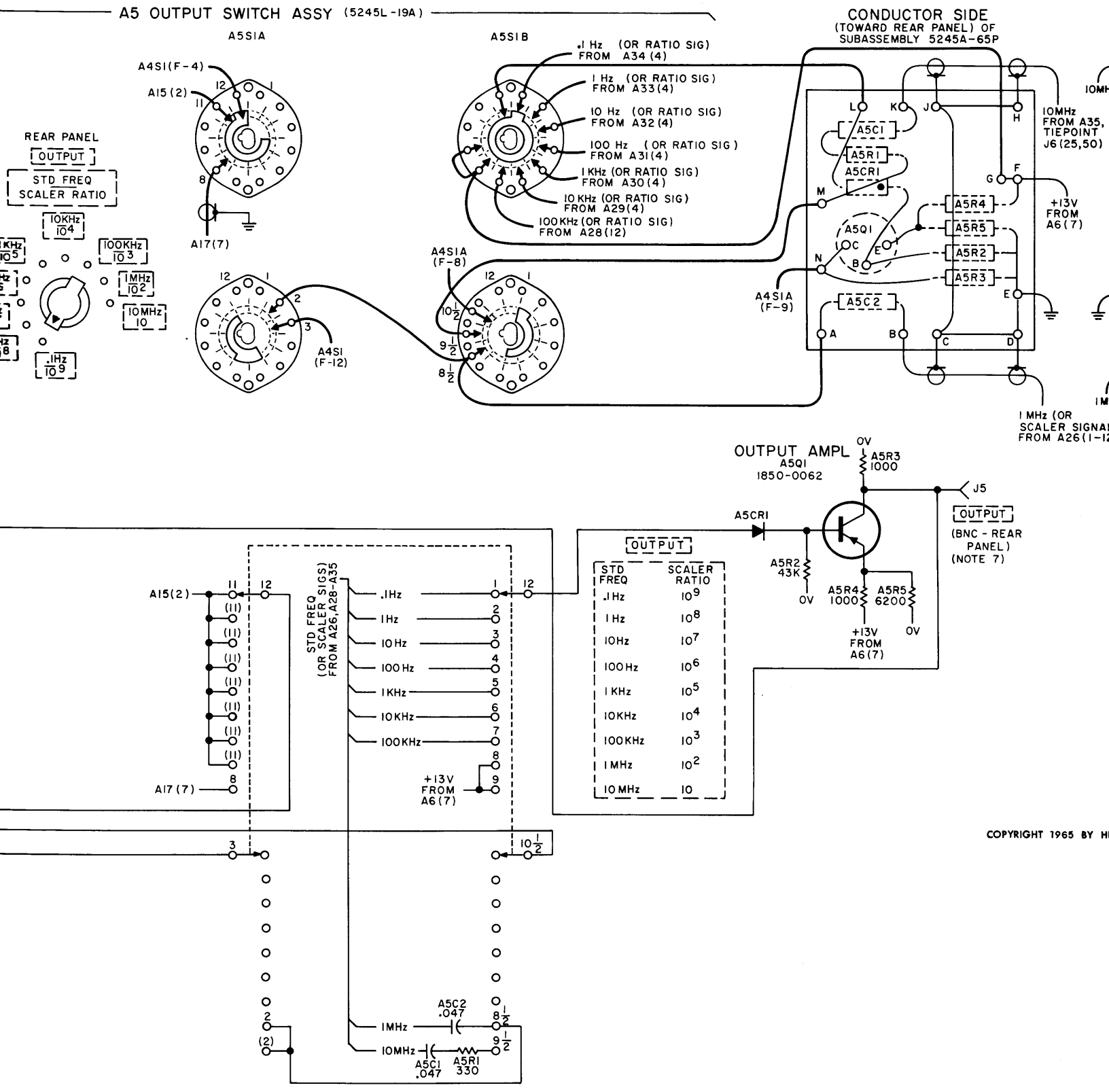
A5 OUTPUT SWITCH ASSY (5245L-19A)
A5S1A
A5S1B
CONDUCTOR SIDE
(TOWARD REAR PANEL) OF
SUBASSEMBLY 5245A-65P
REAR PANEL
OUTPUT
STD FREQ
SCALER RATIO
A4S1(F-4)
A15(2)
A17(7)
A4S1
(F-12)
A4S1A
(F-8)
A4S1A
(F-9)
.1 Hz (OR RATIO SIG)
FROM A34(4)
1 Hz (OR RATIO SIG)
FROM A33(4)
10 Hz (OR RATIO SIG)
FROM A32(4)
100 Hz (OR RATIO SIG)
FROM A31(4)
1 KHz (OR RATIO SIG)
FROM A30(4)
10 KHz (OR RATIO SIG)
FROM A29(4)
100 KHz (OR RATIO SIG)
FROM A28(12)
10MHz
FROM A35,
TIEPOINT
J6(25,50)
+13V
FROM
A6(7)
A5C1
A5R1
A5CR1
A5Q1
A5R4
A5R5
A5R2
A5R3
A5C2
1 MHz (OR
SCALER SIGNA
FROM A26(1-12
OUTPUT AMPL
A5Q1
1850-0062
OV
A5R3
1000
J5
OUTPUT
(BNC - REAR
PANEL)
(NOTE 7)
A5CR1
A5R2
43K
A5R4
1000
A5R5
6200
+13V
FROM
A6(7)
STD FREQ
(OR SCALER SIGS)
FROM A26,A28-A35
.1Hz
1Hz
10Hz
100Hz
1KHz
10KHz
100KHz
1MHz
10MHz
+13V
FROM
A6(7)
OUTPUT
STD FREQ
SCALER RATIO
.1Hz 10^9
1Hz 10^8
10Hz 10^7
100Hz 10^6
1KHz 10^5
10KHz 10^4
100KHz 10^3
1MHz 10^2
10MHz 10
A5C2
.047
A5C1
.047
A5R1
330
COPYRIGHT 1965 BY H

Figure 7-

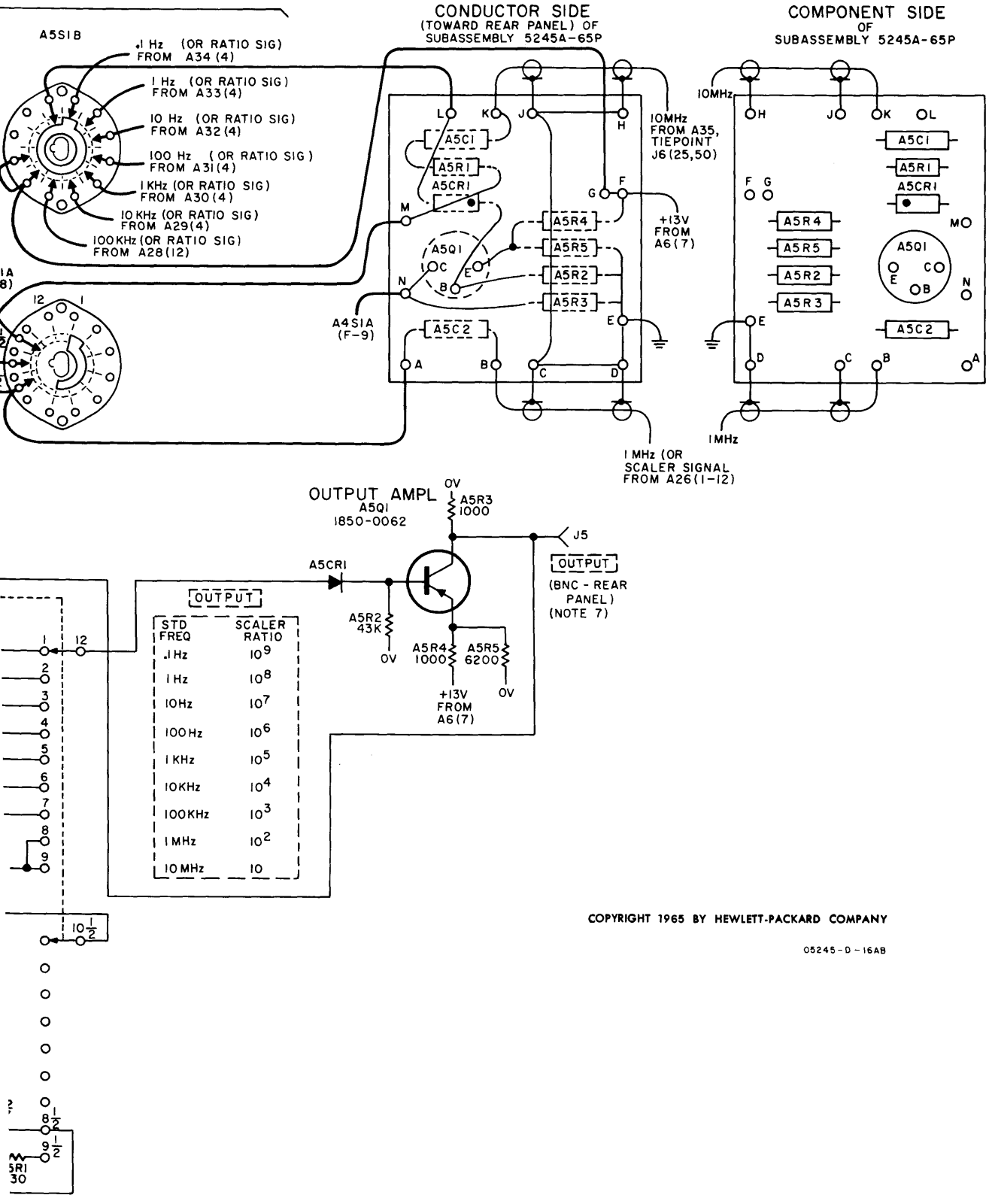

COPYRIGHT 1965 BY HEWLETT-PACKARD COMPANY

05245-D-16AB

Figure 7-6. A4, A5 Mode Switch, Output Switch

Figure 7-7

A6,A7 RECTIFIER, REGULATOR

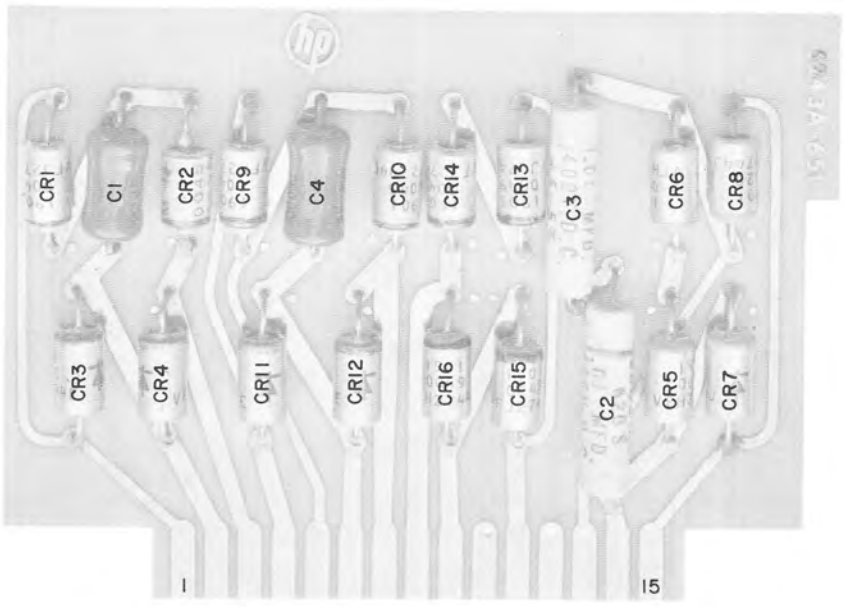
CR1
C1
CR2
CR9
C4
CR10
CR14
CR13
C3
CR6
CR8
CR3
CR4
CR11
CR12
CR16
CR15
C2
CR5
CR7
1
15

A6

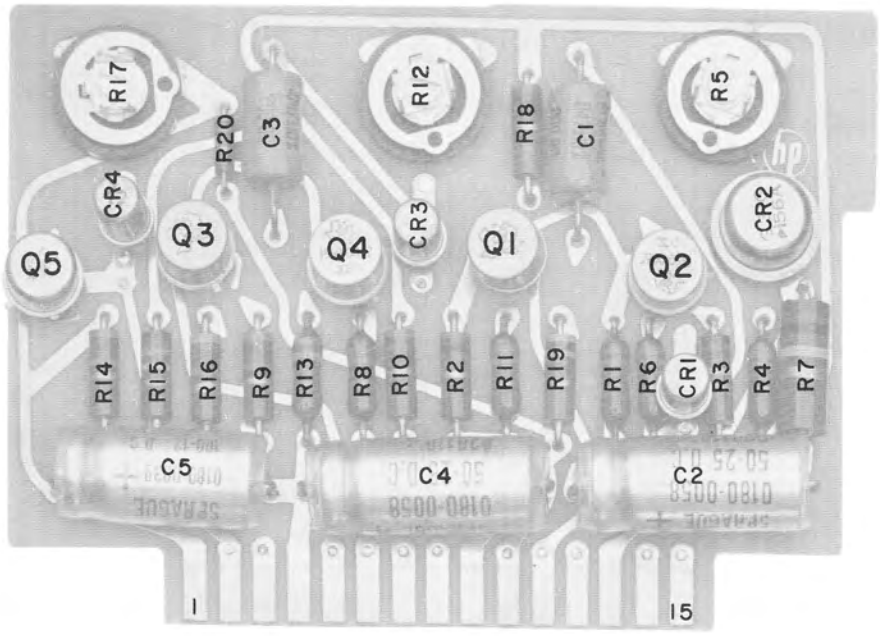
R17
R20
C3
R12
R18
C1
R5
CR4
Q3
Q4
CR3
Q1
Q2
CR2
Q5
R14
R15
R16
R9
R13
R8
R10
R2
R11
R19
R1
R6
CR1
R3
R4
R7
C5
C4
C2
1
15

A7

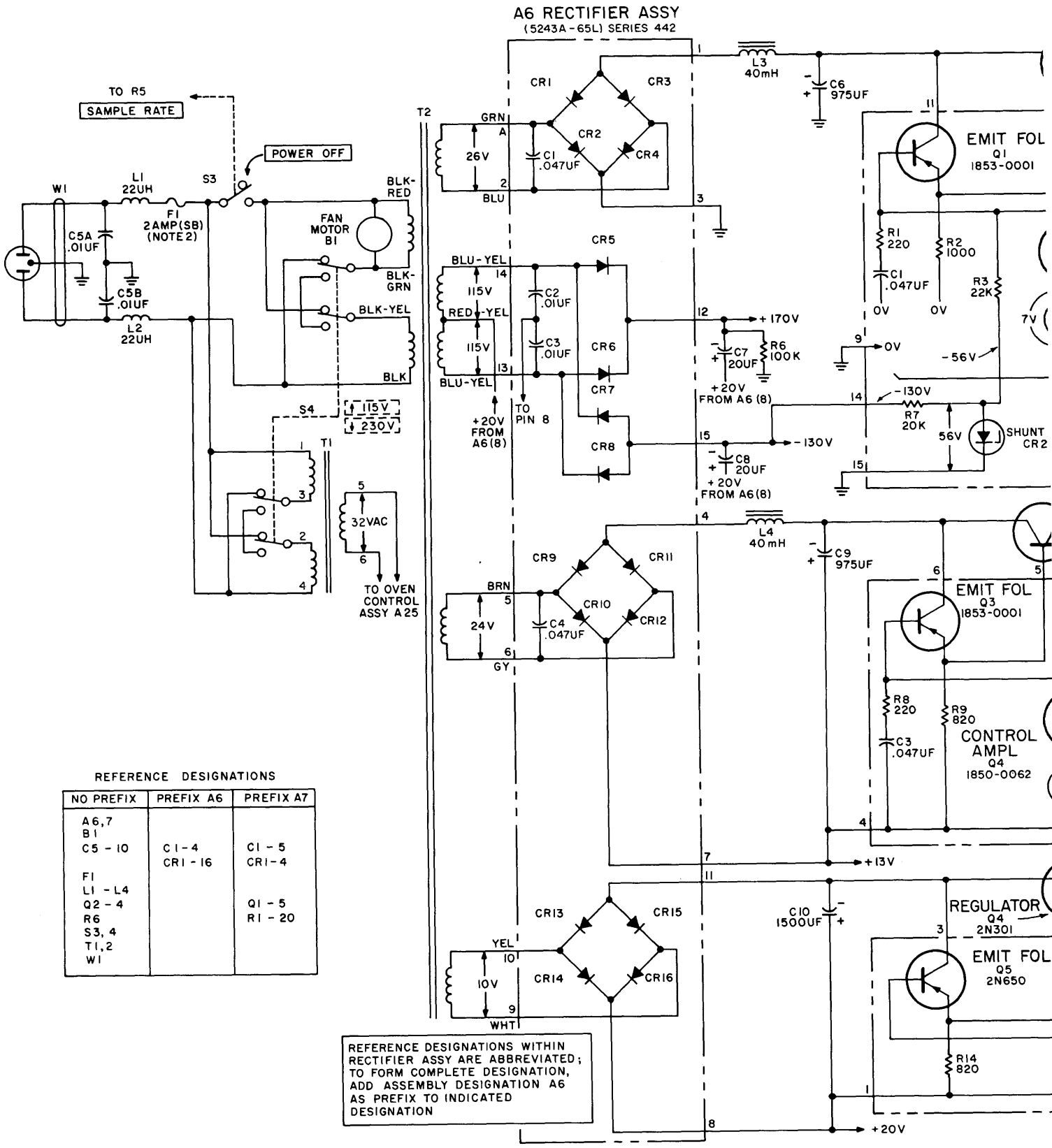

REFERENCE DESIGNATIONS

NO PREFIX	PREFIX A6	PREFIX A7
A6,7 B1 C5 - 10 F1 L1 - L4 Q2 - 4 R6 S3, 4 T1, 2 W1	C1 - 4 CR1 - 16	C1 - 5 CR1 - 4 Q1 - 5 R1 - 20

REFERENCE DESIGNATIONS WITHIN RECTIFIER ASSY ARE ABBREVIATED; TO FORM COMPLETE DESIGNATION, ADD ASSEMBLY DESIGNATION A6 AS PREFIX TO INDICATED DESIGNATION

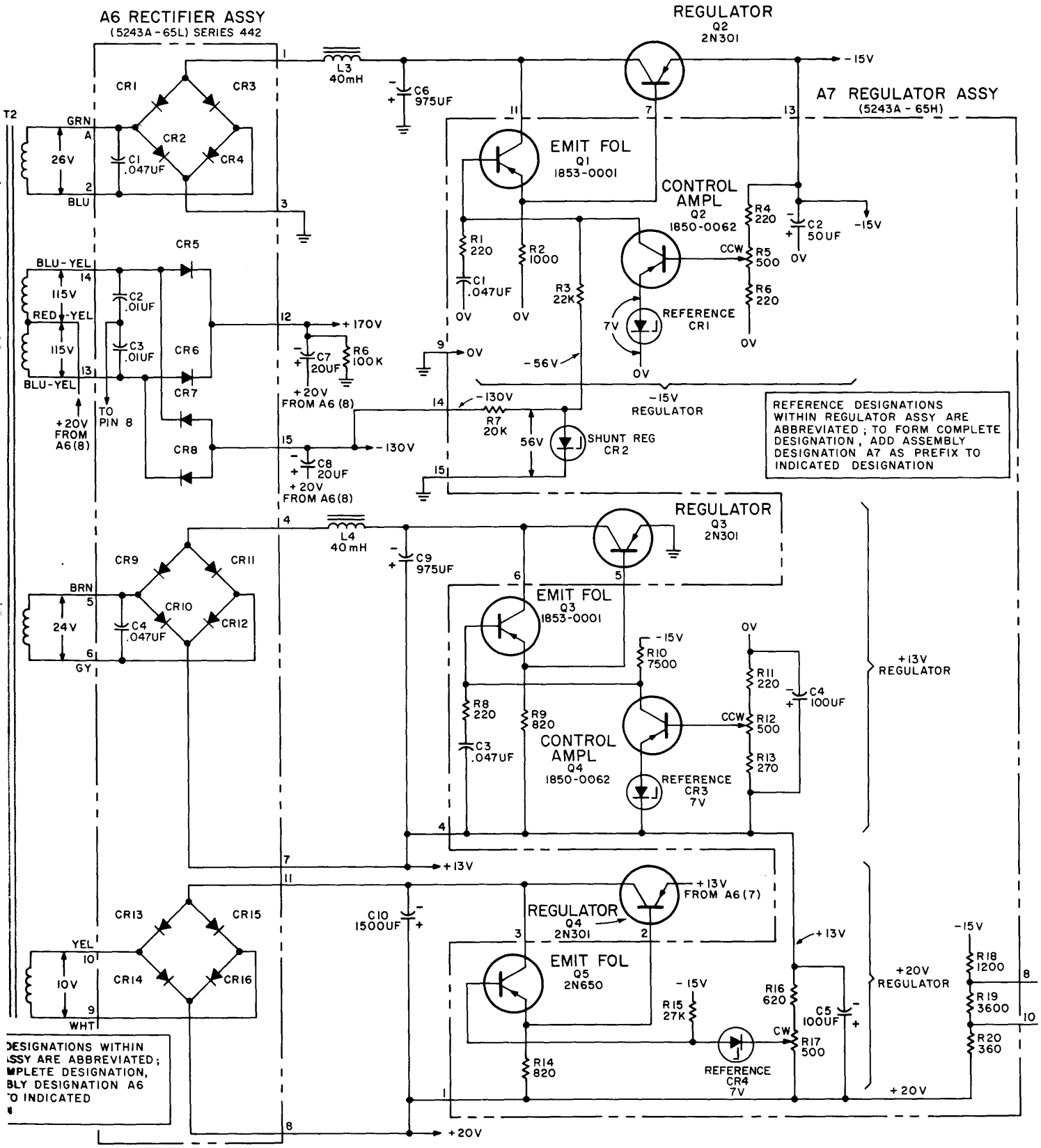
A6 RECTIFIER ASSY
(5243A-65L) SERIES 442
A7 REGULATOR ASSY
(5243A-65H)
T2
GRN
A
26V
2
BLU
CR1
CR2
CR3
CR4
C1
.047UF
L3
40mH
C6
975UF
REGULATOR
Q2
2N301
-15V
EMIT FOL
Q1
1853-0001
CONTROL
AMPL
Q2
1850-0062
R1
220
R2
1000
C1
.047UF
R3
22K
R4
220
C2
50UF
R5
500
CCW
R6
220
REFERENCE
CR1
7V
0V
-56V
BLU-YEL
14
115V
RED-YEL
115V
13
BLU-YEL
C2
.01UF
C3
.01UF
CR5
CR6
CR7
CR8
+20V
FROM
A6(8)
TO
PIN 8
12
+170V
C7
20UF
R6
100K
+20V
FROM A6 (8)
9
14
-130V
R7
20K
56V
SHUNT REG
CR2
-15V
REGULATOR
15
C8
20UF
+20V
FROM A6(8)
REFERENCE DESIGNATIONS WITHIN REGULATOR ASSY ARE ABBREVIATED; TO FORM COMPLETE DESIGNATION, ADD ASSEMBLY DESIGNATION A7 AS PREFIX TO INDICATED DESIGNATION
REGULATOR
Q3
2N301
4
L4
40mH
C9
975UF
BRN
5
24V
6
GY
CR9
CR10
CR11
CR12
C4
.047UF
EMIT FOL
Q3
1853-0001
R10
7500
R11
220
C4
100UF
R8
220
R9
820
C3
.047UF
CONTROL
AMPL
Q4
1850-0062
R12
500
R13
270
REFERENCE
CR3
7V
+13V
REGULATOR
7
+13V
11
C10
1500UF
REGULATOR
Q4
2N301
+13V
FROM A6(7)
3
2
EMIT FOL
Q5
2N650
R15
27K
R16
620
C5
100UF
R17
500
CW
R14
820
REFERENCE
CR4
7V
+20V
REGULATOR
R18
1200
R19
3600
R20
360
8
10
YEL
10
10V
9
WHT
CR13
CR14
CR15
CR16
1
+20V
8
+20V
DESIGNATIONS WITHIN
SSY ARE ABBREVIATED;
MPLETE DESIGNATION,
BLY DESIGNATION A6
O INDICATED

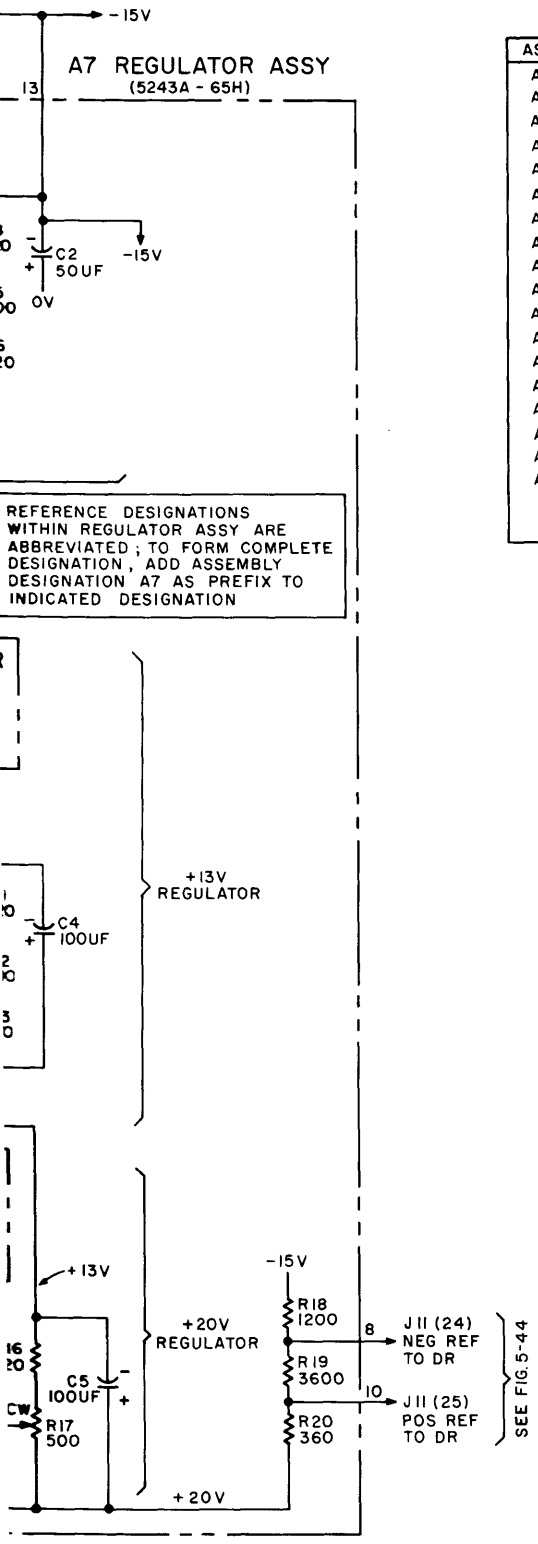

POWER DISTRIBUTION

ASSY	-15V	+13V	+20V	+170V	-130V	0V	ASSY	-15V	+13V	+20V	+170V	-130V	0V
A1				✓		✓	A19	✓	✓	✓			✓
A2	✓					✓	A20	✓	✓	✓			✓
A3	✓						A21		✓	✓			✓
A4							A22	✓	✓				✓
A5	✓					✓	A23	✓	✓	✓			✓
A6	RECTIFIER ASSY					✓	A24						✓
A7	REGULATOR ASSY					✓	A25	(32 VAC)					✓
A8	✓		✓				A26	✓		✓			✓
A9	✓		✓				A27	✓					✓
A10	✓		✓	✓	✓		A28	✓	✓				
A11	✓		✓	✓	✓		A29	✓	✓				
A12	✓		✓	✓	✓		A30	✓	✓				
A13	✓		✓	✓	✓		A31	✓	✓				
A14	✓		✓	✓	✓		A32	✓	✓				
A15	✓		✓	✓	✓		A33	✓	✓				
A16	✓		✓	✓	✓		A34	✓	✓				
A17		✓	✓			✓	A35	✓	✓	✓			✓
A18	✓		✓	✓	✓		J6	✓	✓	✓	✓	✓	✓
							J9	✓	✓	✓			✓
							J10				✓	✓	

NOTES

1. UNLESS OTHERWISE INDICATED:
   RESISTANCE IN OHMS
   CAPACITANCE IN PICOFARADS

2. FOR 230V OPERATION, OPERATE S4 TO 230V POSITION AND INSTALL 1AMP SLOW-BLOW FUSE (F1)

COPYRIGHT 1965 BY HEWLETT-PACKARD COMPANY

05245-D-18ABCD

Figure 7-7. A6, A7 Rectifier, Regulator

Figure 7-8

A8,A9 DECIMAL POINT, MEASUREMENT UNITS

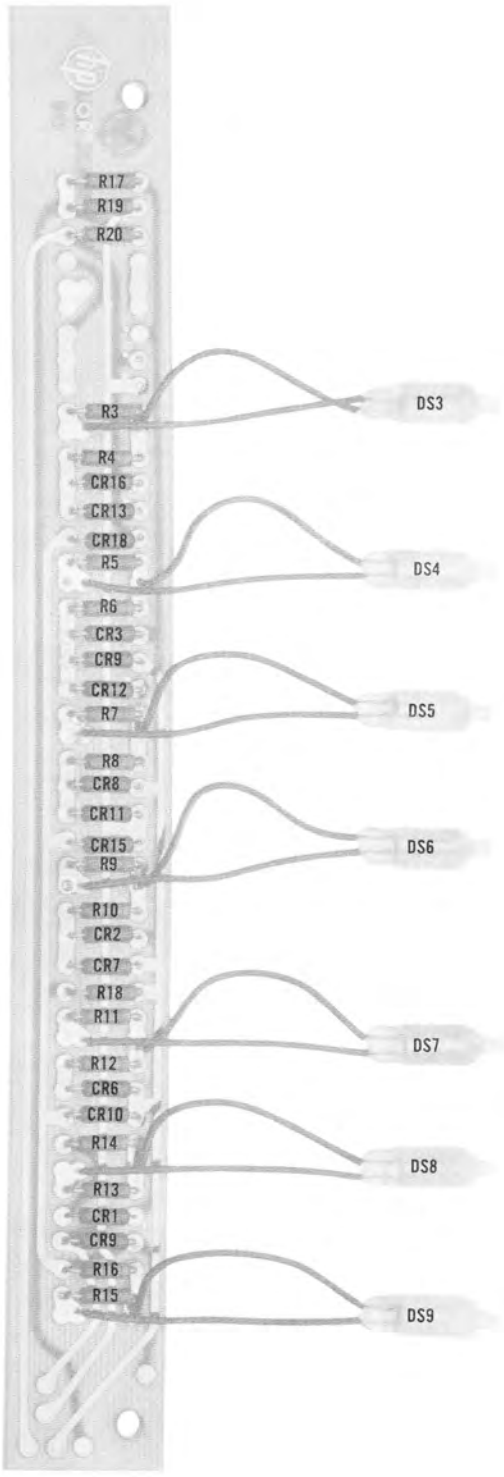
R17
R19
R20
R3
R4
CR16
CR13
CR18
R5
R6
CR3
CR9
CR12
R7
R8
CR8
CR11
CR15
R9
R10
CR2
CR7
R18
R11
R12
CR6
CR10
R14
R13
CR1
CR9
R16
R15
DS3
DS4
DS5
DS6
DS7
DS8
DS9

A8

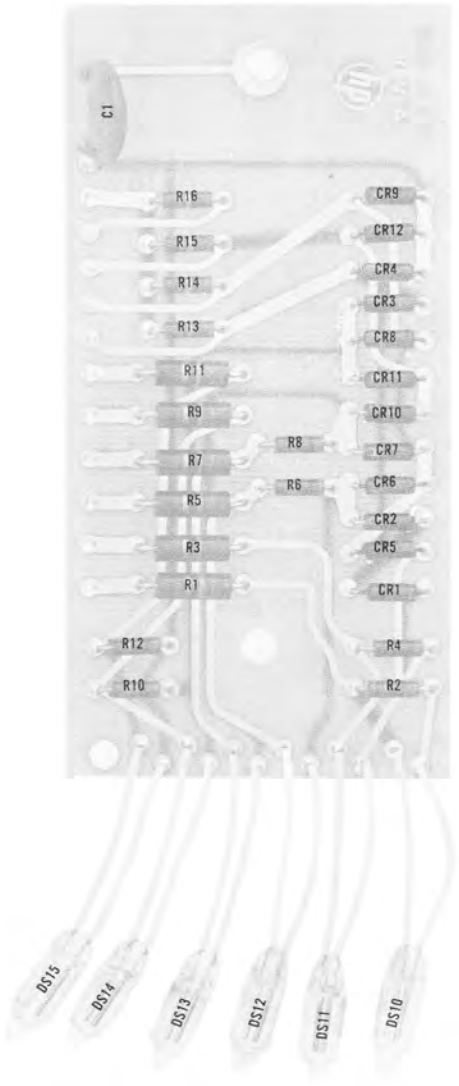
C1
R16
R15
R14
R13
R11
R9
R8
R7
R6
R5
R3
R1
R12
R10
CR9
CR12
CR4
CR3
CR8
CR11
CR10
CR7
CR6
CR2
CR5
CR1
R4
R2
DS15
DS14
DS13
DS12
DS11
DS10

A9

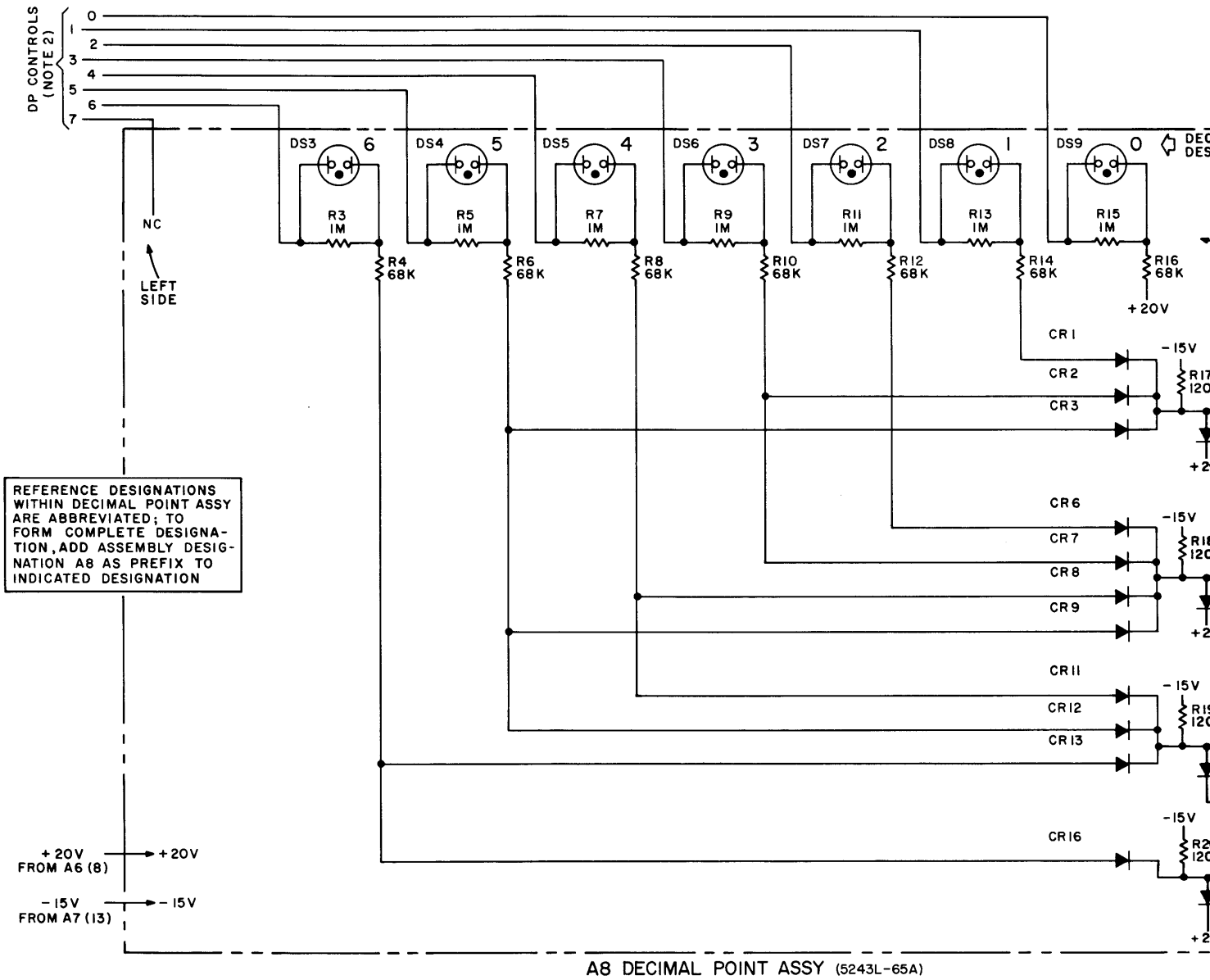

A8 DECIMAL POINT ASSY (5243L-65A)

NOTES

1. UNLESS OTHERWISE INDICATED:
   RESISTANCE IN OHMS
   CAPACITANCE IN PICOFARADS

2. INPUT OF +170V FOP DP CONTROLS AND MU CONTROLS IS REQUIRED TO TURN LAMPS ON; SEE TABLE ON OVERALL DIAGRAM SHEET 1 FOR COMPLETE DESCRIPTION

REFERENCE DESIGNATIONS

PREFIX A8	PREFIX A9
CR1-18 DS2-9 R1-20	C1 CR1-12 DS10-15 R1-16

DELETED: A8CR4, CR14, CR17
A8DS2
A8R1, R2

COMPONENT LOCATION (5243L-65A), FROM
DOT INDICATES DIODE CATHODE

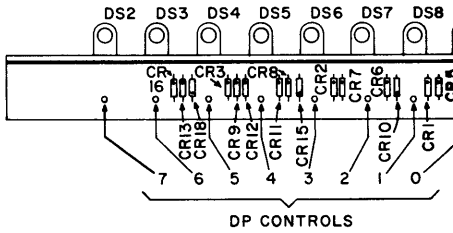

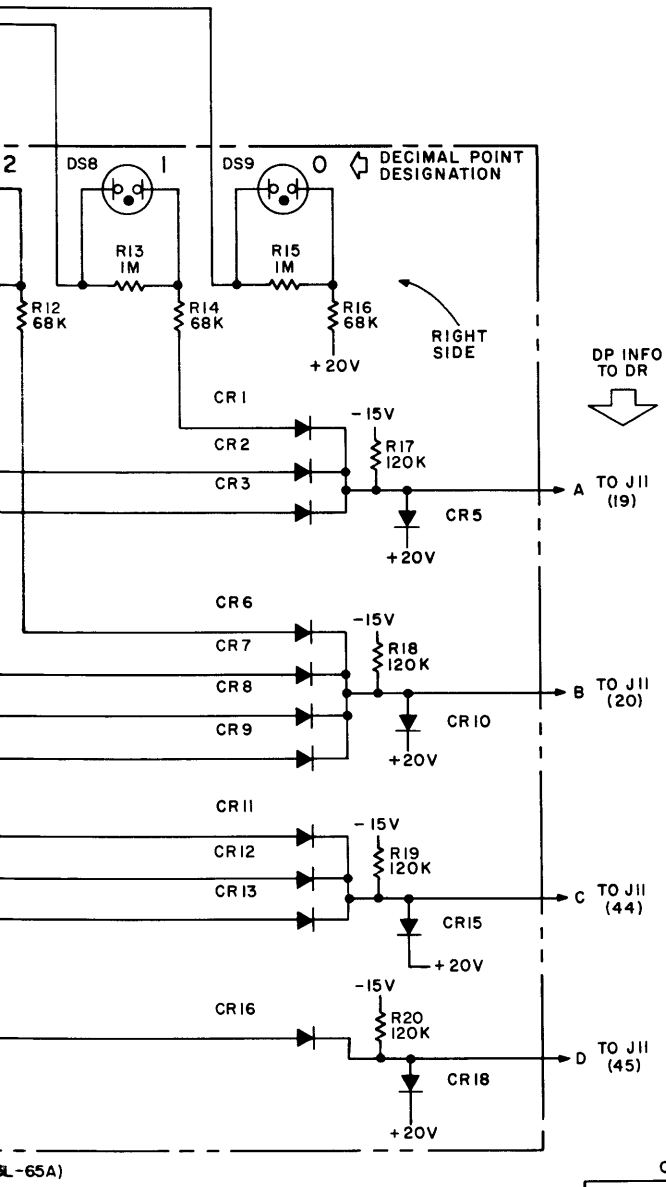

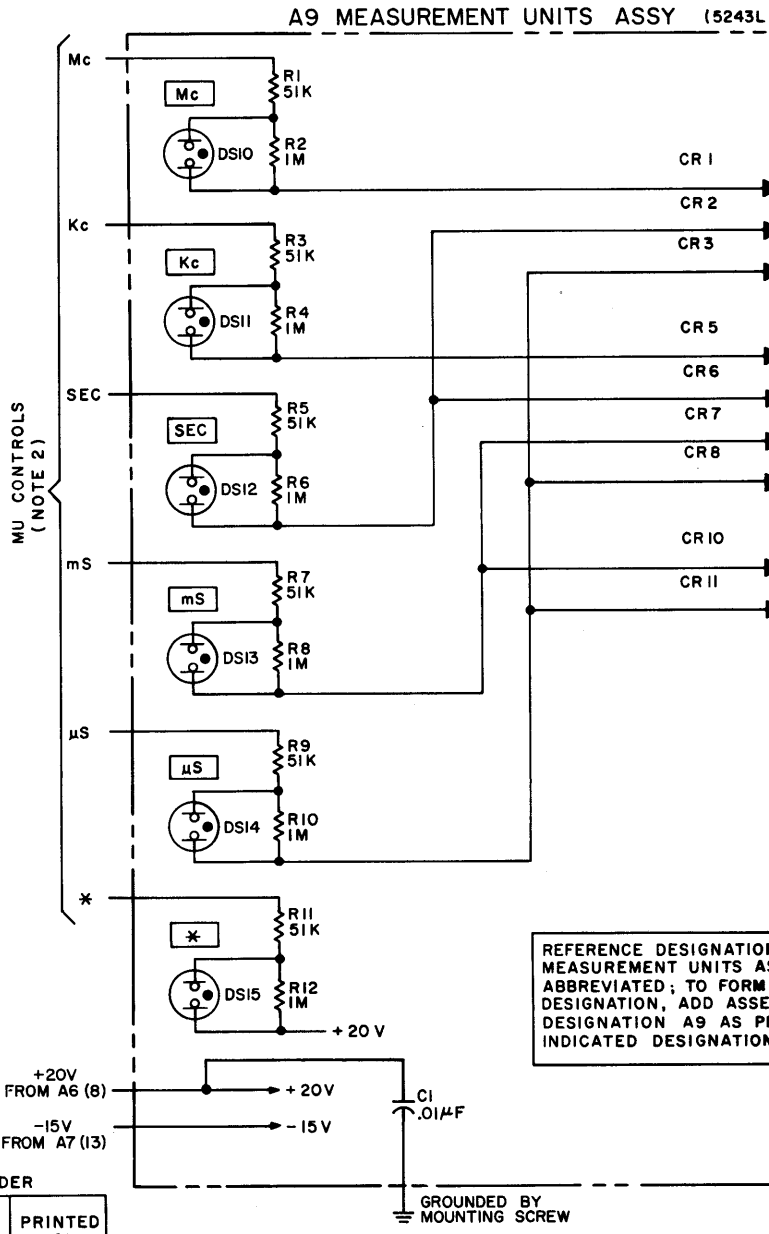

OUTPUT TO RECORDER

	LIGHTED SYMBOL	4 LINE CODE (0 = −, 1 = +) D	C	B	A	PRINTED DIGIT
DP	NONE	0	0	0	0	0
	0	0	0	0	1	0
	1	0	0	0	1	1
	2	0	0	1	0	2
	3	0	0	1	1	3
	4	0	1	1	0	4
	5	0	1	1	1	5
	6	1	1	0	0	6
	7	1	1	0	1	7
MU	Mc	0	0	0	1	1
	Kc	0	0	1	0	2
	SEC	0	0	1	1	3
	mS	0	1	1	0	4
	uS	0	1	1	1	5
	*	0	0	0	0	0

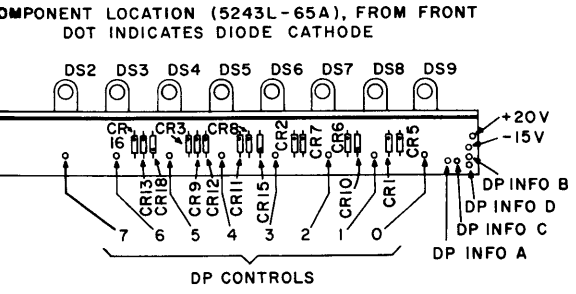

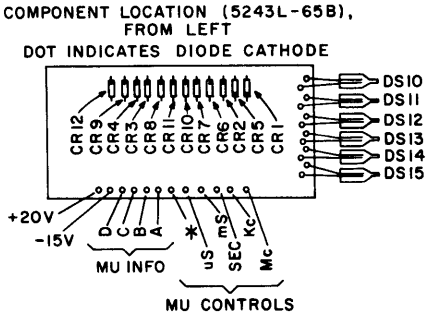

Figure 7-8. A8

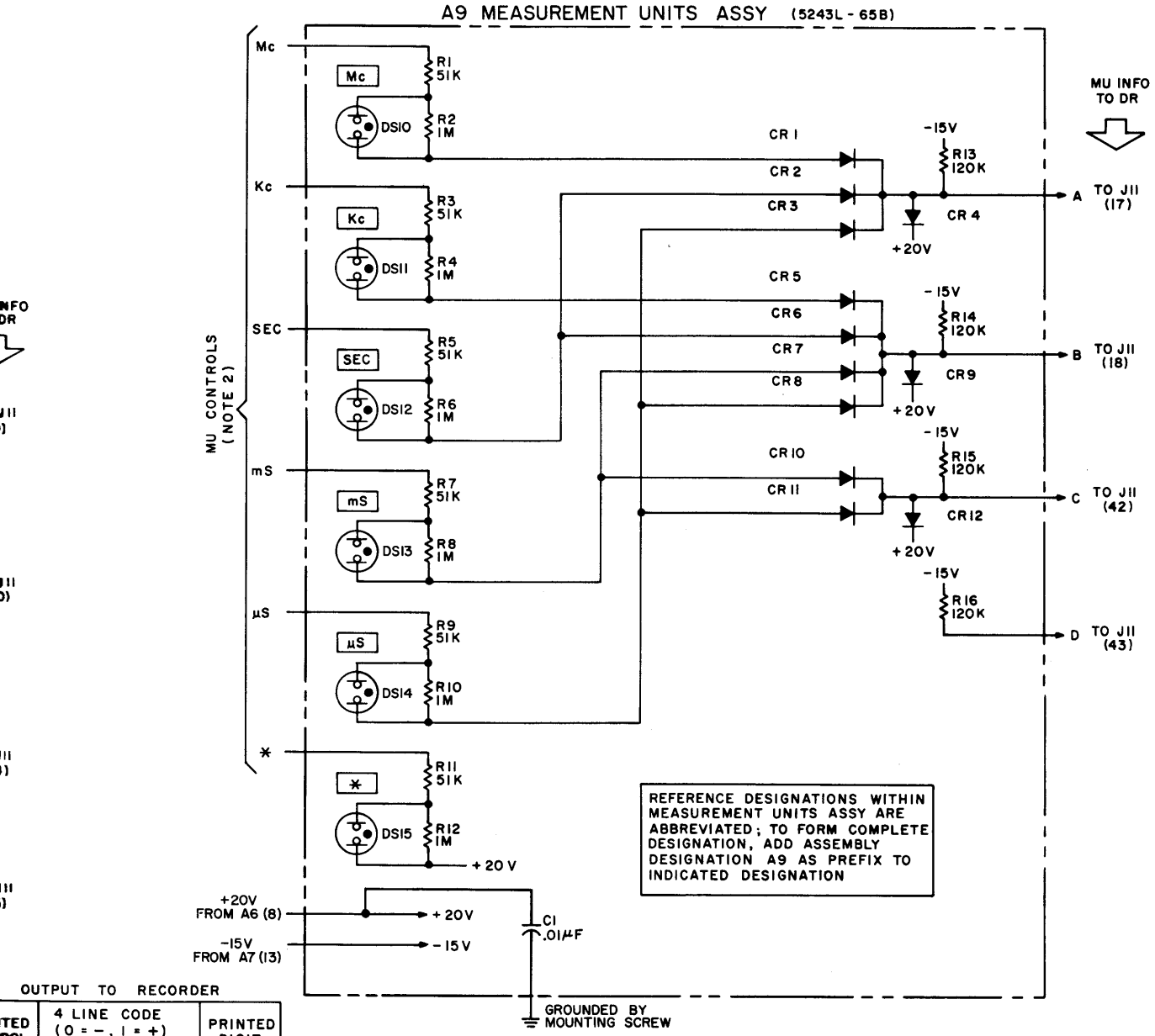

OUTPUT TO RECORDER

TED BOL	4 LINE CODE (0 = −, 1 = +) D	C	B	A	PRINTED DIGIT
ONE	0	0	0	0	0
0	0	0	0	0	0
1	0	0	0	1	1
2	0	0	1	0	2
3	0	0	1	1	3
4	0	1	1	0	4
5	0	1	1	1	5
6	1	1	0	0	6
7	1	1	0	1	7
Mc	0	0	0	1	1
Kc	0	0	1	0	2
SEC	0	0	1	1	3
mS	0	1	1	0	4
µS	0	1	1	1	5
*	0	0	0	0	0

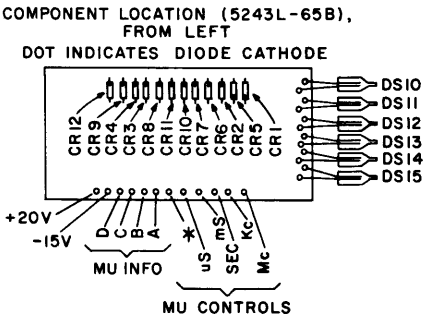

COPYRIGHT 1965 BY HEWLETT-PACKARD COMPANY
This drawing is intended for the operation and maintenance of Hewlett-Packard equipment and is not to be used otherwise or reproduced without written consent of the Hewlett-Packard Company.
5245L/DPA-A8, MUA-A9/408

05245-D-22AB

Figure 7-8. A8, A9 Decimal Point, Measurement Units

Figure 7-9

A10-A14 DECIMAL COUNTER (5212L-4A)

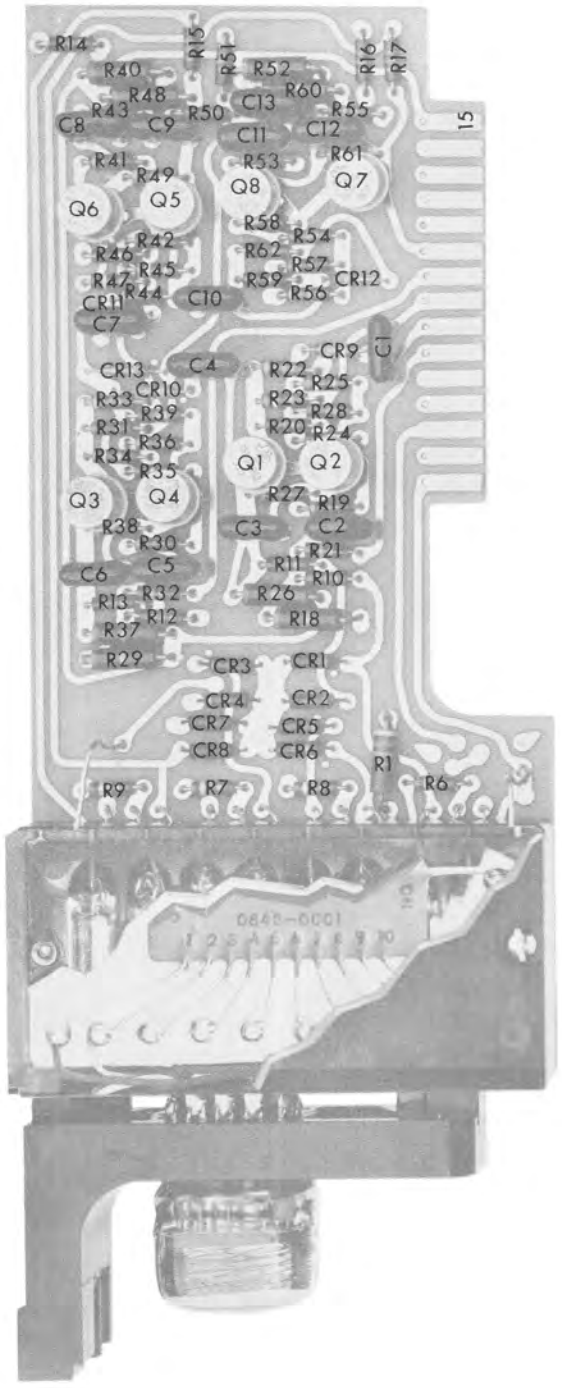
R14
R15
R51
R52
R16
R17
R40
R48
R60
R43
R50
C13
R55
C8
C9
C11
C12
15
R41
R53
R61
R49
Q8
Q7
Q6
Q5
R58
R42
R54
R46
R62
R45
R57
R47
R59
CR12
R44
C10
R56
CR11
C7
CR9
C1
CR13
C4
R22
R25
R33
CR10
R23
R28
R31
R39
R20
R24
R36
R34
Q1
Q2
R35
Q3
Q4
R27
R19
R38
C3
C2
R30
R21
C5
R11
C6
R10
R32
R26
R13
R12
R18
R37
R29
CR3
CR1
CR4
CR2
CR7
CR5
CR8
CR6
R1
R9
R7
R8
R6
0848-0001

A10-A14

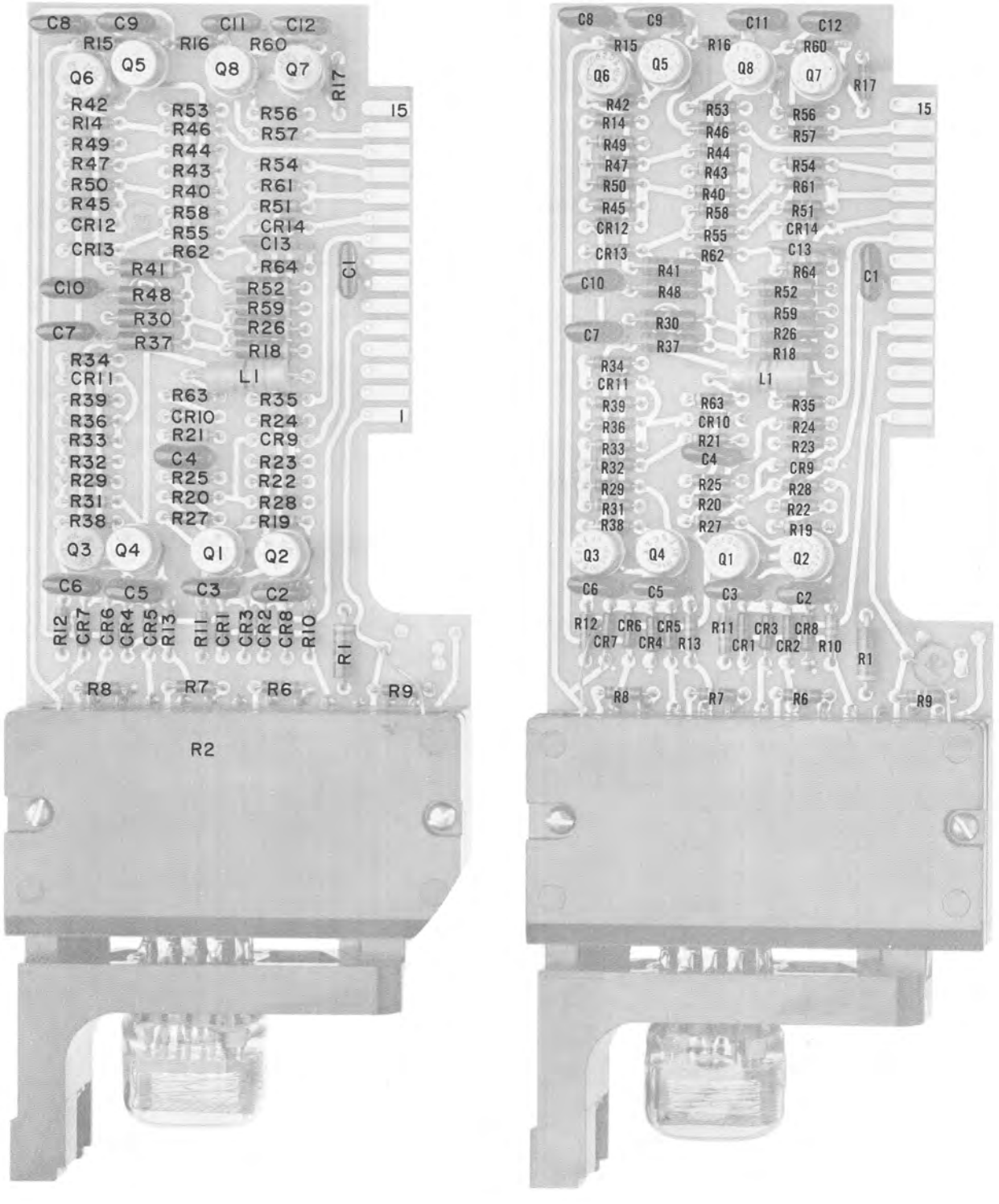
C8
C9
C11
C12
R15
R16
R60
Q5
Q8
Q7
Q6
R17
R42
R53
R56
15
R14
R46
R57
R49
R44
R47
R54
R43
R50
R61
R40
R45
R58
R51
CR12
R55
CR14
CR13
R62
C13
R41
R64
C1
C10
R48
R52
R59
R30
C7
R26
R37
R18
R34
L1
CR11
R39
R63
R35
R36
CR10
R24
1
R33
R21
CR9
R32
C4
R23
R29
R25
R22
R31
R20
R28
R38
R27
R19
Q3
Q4
Q1
Q2
C6
C5
C3
C2
R12
CR7
CR6
CR4
CR5
R13
R11
CR1
CR3
CR2
CR8
R10
R1
R8
R7
R6
R9
R2
+1248
-1248
A10-A14

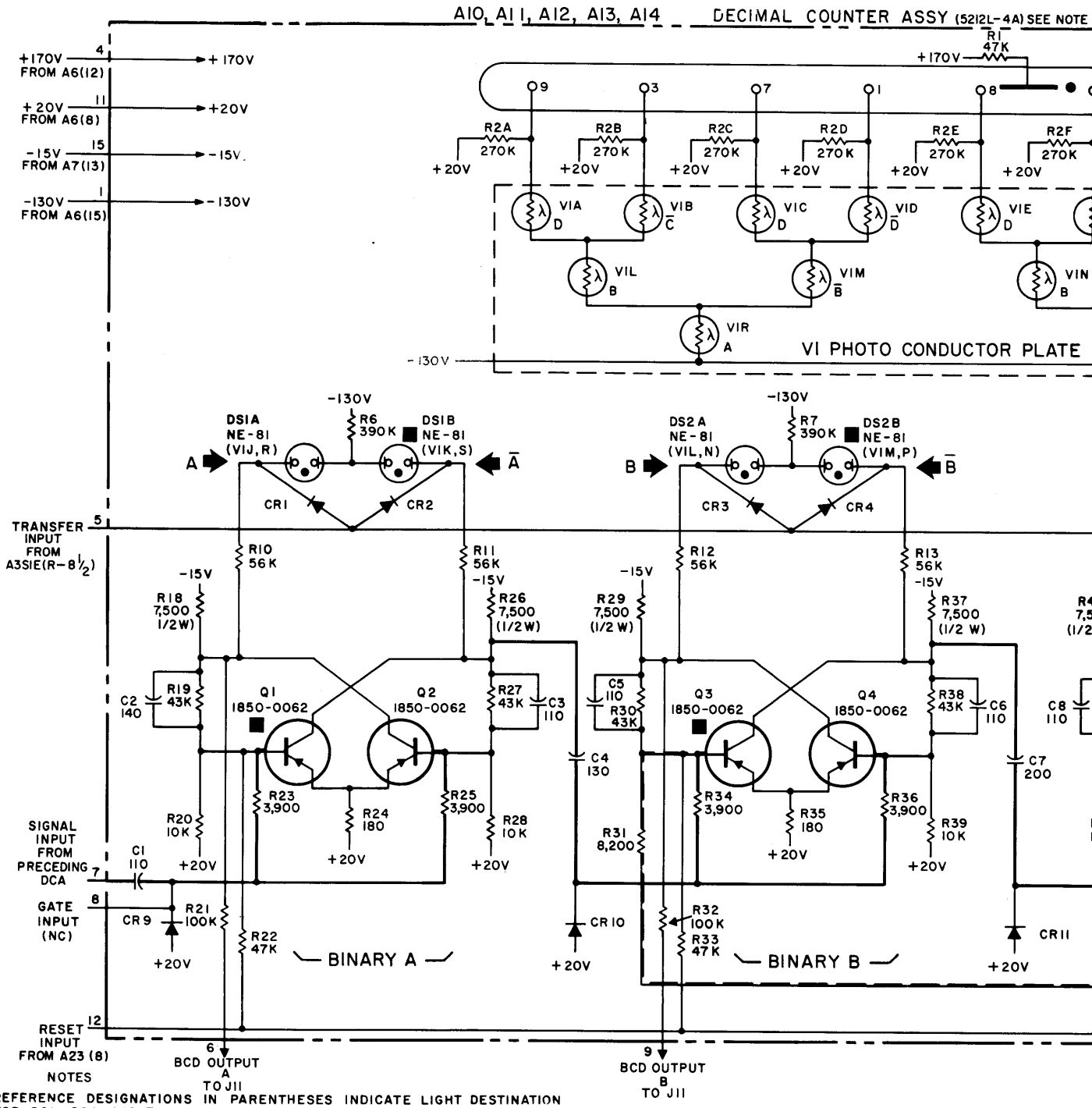

NOTES

1. REFERENCE DESIGNATIONS IN PARENTHESES INDICATE LIGHT DESTINATION FOR DS1-DS4; LIGHT SOURCE IS NOTED NEAR EACH VI SECTION.
2. REFERENCE DESIGNATIONS WITHIN DECIMAL COUNTER ASSY ARE INCOMPLETE; TO FORM COMPLETE REFERENCE DESIGNATION, ADD ASSY DESIGNATION A10, A11, A12, A13, OR A14, AS PREFIX TO INDICATED DESIGNATION; ASSY DESIGNATION IS SHOWN ON OVERALL FUNCTIONAL SCHEMATIC
3. UNLESS OTHERWISE INDICATED:
   RESISTANCE IN OHMS;
   CAPACITANCE IN PICOFARADS
4. FOR DS1-DS4, SECTION A LIGHTS ON "1", SECTION B LIGHTS ON "0."
5. FILLED SQUARE (■) INDICATES CONDUCTING ELEMENT FOR DECIMAL "0" (BCD "0000.")

COPYRIGHT 1965 BY HEWLETT-PACKARD COMPANY

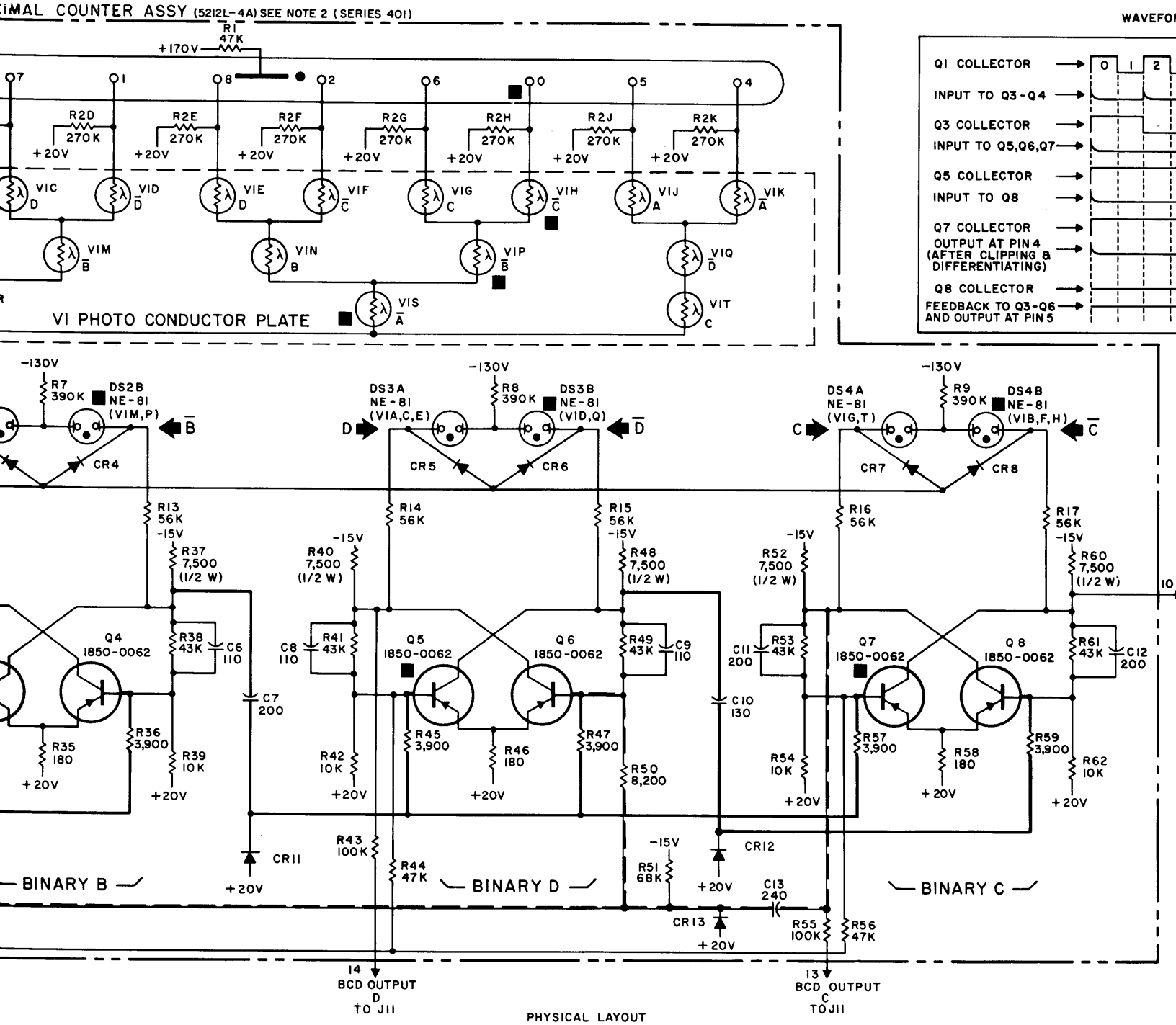

S4, SECTION A LIGHTS ON "1" LIGHTS ON "0."

ARE (■) INDICATES CONDUCTING FOR DECIMAL "0" (BCD "0000")

65 BY HEWLETT-PACKARD COMPANY

PHYSICAL LAYOUT

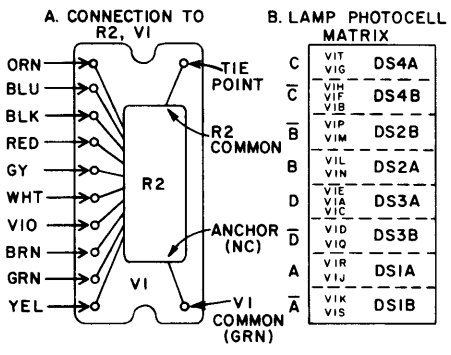

DIGIT	4 LINE CODE (0=−, 1=+)				RELEVANT STAGES				
	D	C	B	A	VI	BINARY D	C	B	A
0	0	0	0	0	HPS		■	■	■
1	0	0	0	1	DMR	■		■	■
2	0	0	1	0	FNS		■	■	■
3	0	0	1	1	BLR		■	■	■
4	0	1	1	0	KQT	■	■		■
5	0	1	1	1	JQT	■	■		■
6	1	1	0	0	GPS		■	■	■
7	1	1	0	1	CMR	■	■	■	■
8	1	1	1	0	ENS	■		■	■
9	1	1	1	1	ALR	■		■	■

Figure 7

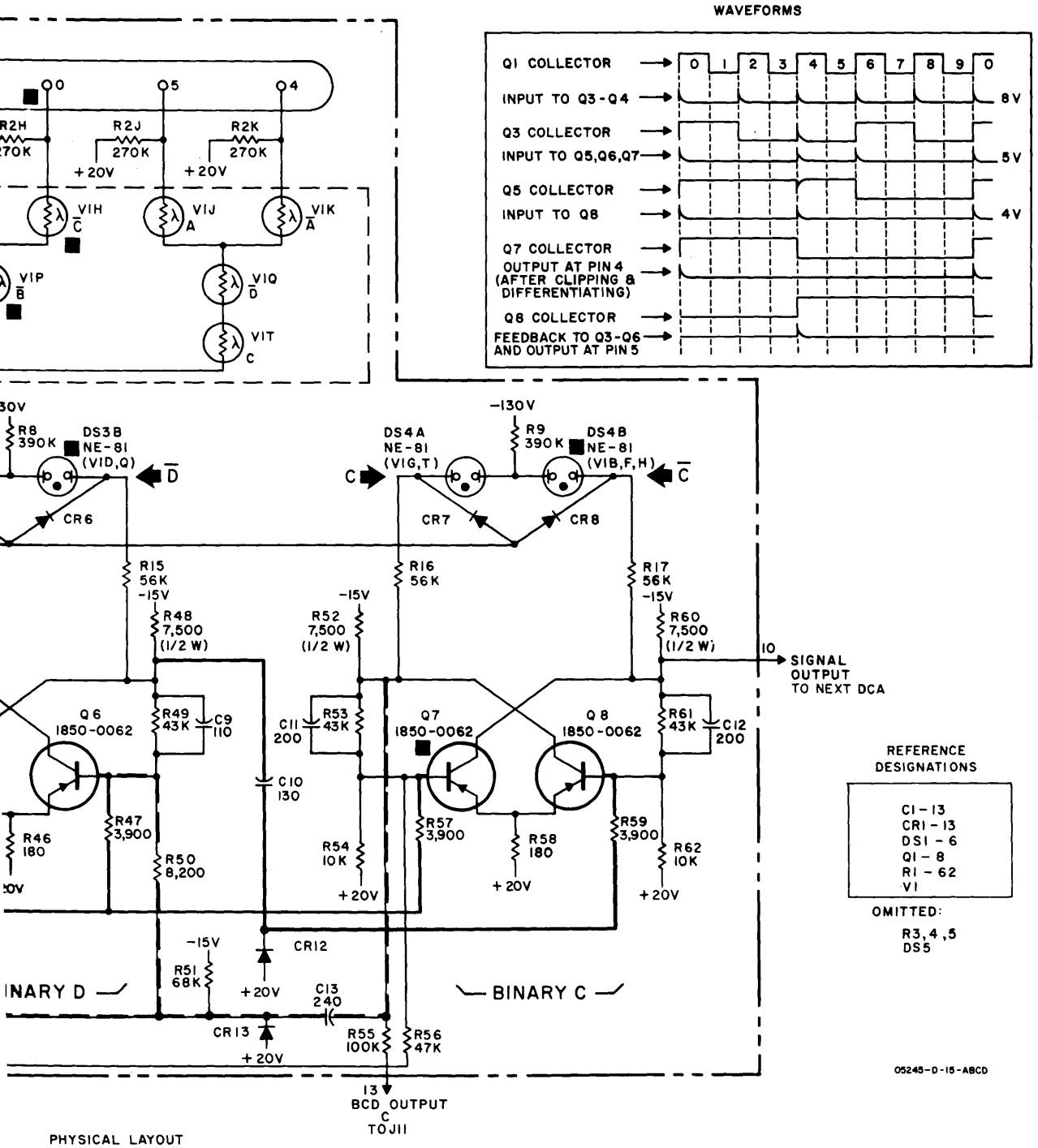

PHYSICAL LAYOUT

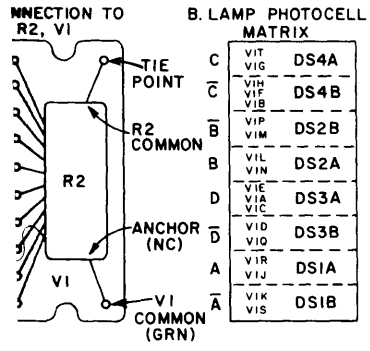

DIGIT	4 LINE CODE (0 = −, 1 = +)				RELEVANT STAGES V1	BINARY			
	D	C	B	A		D	C	B	A
0	0	0	0	0	HPS		■	■	■
1	0	0	0	1	DMR	■		■	■
2	0	0	1	0	FNS		■	■	■
3	0	0	1	1	BLR		■	■	■
4	0	1	1	0	KQT	■	■		■
5	0	1	1	1	JQT	■	■		■
6	1	1	0	0	GPS		■	■	■
7	1	1	0	1	CMR	■		■	■
8	1	1	1	0	ENS	■		■	■
9	1	1	1	1	ALR	■		■	■

Figure 7-9. A10-A14 Decimal Counter (5212L-4A)

Figure 7-10

A10-A14 DECIMAL COUNTER (05212-6002,6003)
OPTION 02,03

NOTES

1. UNLESS OTHERWISE INDICATED:
   RESISTANCE IN OHMS;
   CAPACITANCE IN PICOFARADS
2. REFERENCE DESIGNATIONS IN PARENTHESES INDICATE LIGHT DESTINATION FOR DS1 – DS4. LIGHT SOURCE IS NOTED NEAR EACH V1 SECTION.
3. FOR DS1 – DS4, SECTION A LIGHTS ON "1"; SECTION B LIGHTS ON "0"
4. FILLED SQUARE (■) INDICATES CONDUCTING ELEMENT FOR DECIMAL "0" (BCD "0000")
5. OUTPUT CODE:
   OPTION 02: 1 = +18V, 0 = −8V
   OPTION 03: 1 = −8V, 0 = +18V
6. THE 05212-6002 DCA'S ARE USED IN OPTION 02 INSTRUMENTS. THE 05212-6003 DCA'S ARE USED IN OPTION 03 INSTRUMENTS. THIS SCHEMATIC IS FOR BOTH DCA'S. THE ASSEMBLIES ARE IDENTICAL WITH ONE EXCEPTION. THE OPTION 02 DCA'S (05212-6002) WITH A "1" STATE POSITIVE BCD OUTPUT HAVE RESISTORS MARKED WITH A DOUBLE ASTERISK (**) CONNECTED TO COLLECTORS AS SHOWN BY — + — + — LINES. THE OPTION 03 DCA'S (05212-6003) WITH A "1" STATE NEGATIVE BCD OUTPUT HAVE THESE RESISTORS CONNECTED TO OPPOSITE COLLECTORS AS SHOWN BY — – — – — LINE.

REFERENCE DESIGNATIONS

A10 — A14
C 1 — 13 CR1 — 14 DS1 — 6 L 1 Q 1 — 8 R 1 — 64 V 1

OMITTED: DS5
R3 – 5

TRUTH TABLE

DIGIT	4 LINE CODE				RELEVANT STAGES				
					V1	BINARY			
	D	C	B	A		D	C	B	A
0	0	0	0	0	KPRT				
1	0	0	0	1	FMQT				
2	0	0	1	0	HNRT				
3	0	0	1	1	EMQT				
4	0	1	0	0	JPRT				
5	0	1	0	1	DLQT				
6	0	1	1	0	GNRT				
7	0	1	1	1	CLQT				
8	1	0	0	0	BS				
9	1	0	0	1	AS				

WAVEFORMS

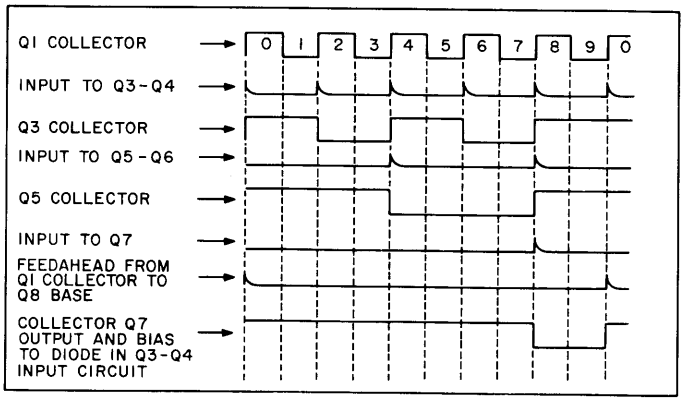

05245-D-52

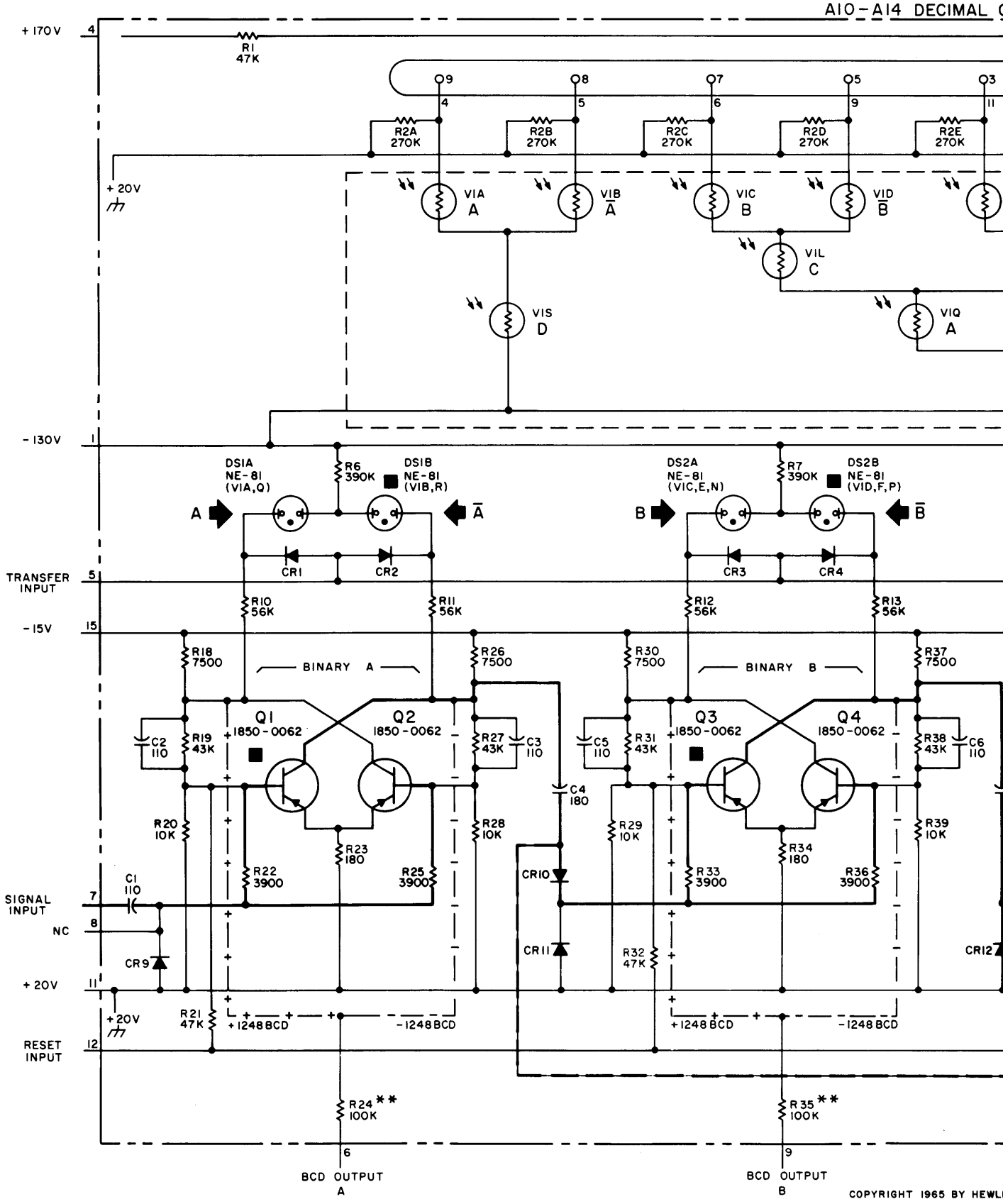

COPYRIGHT 1965 BY HEWL

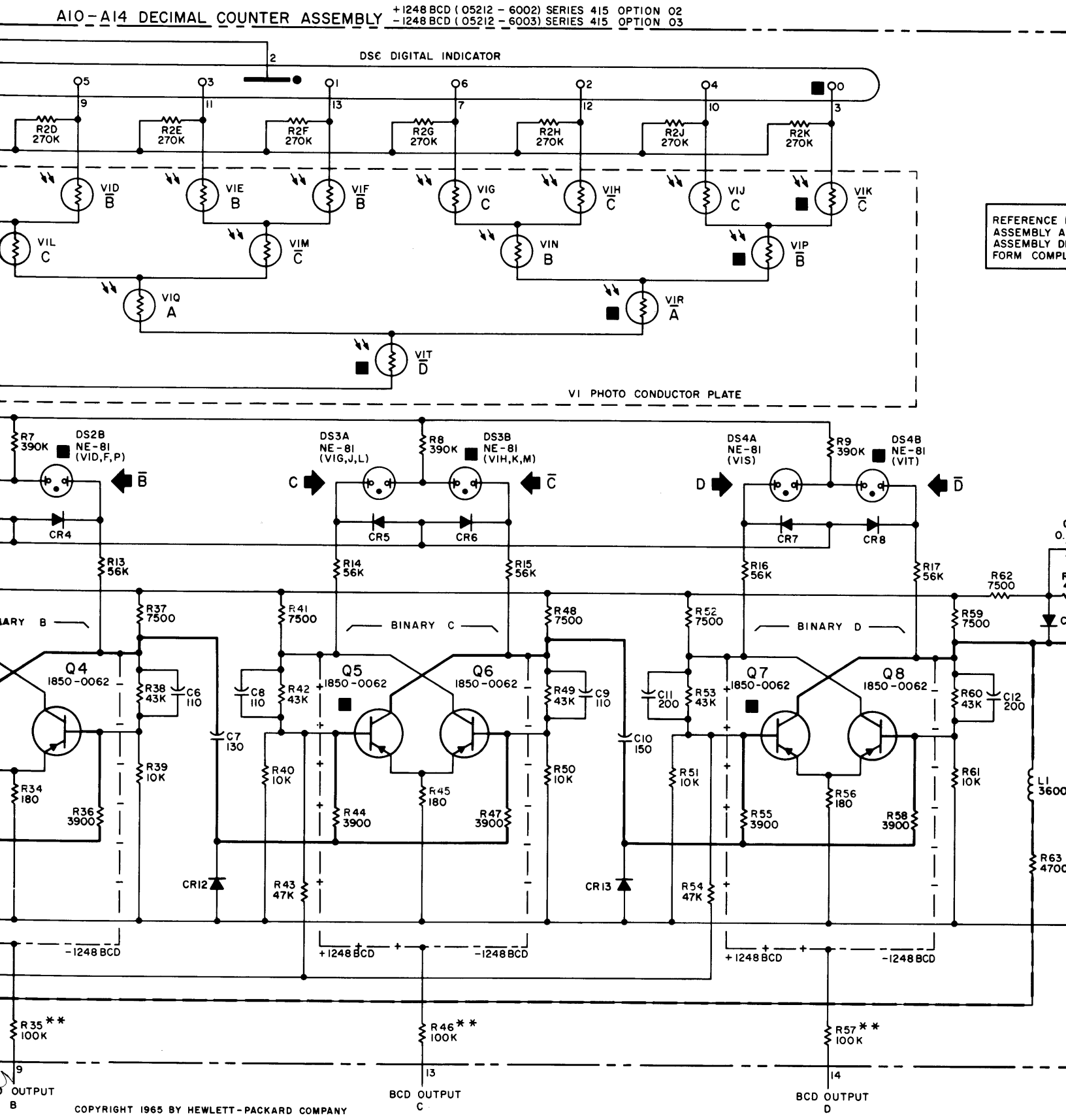

Figure 7-10. A10-A14 Dec

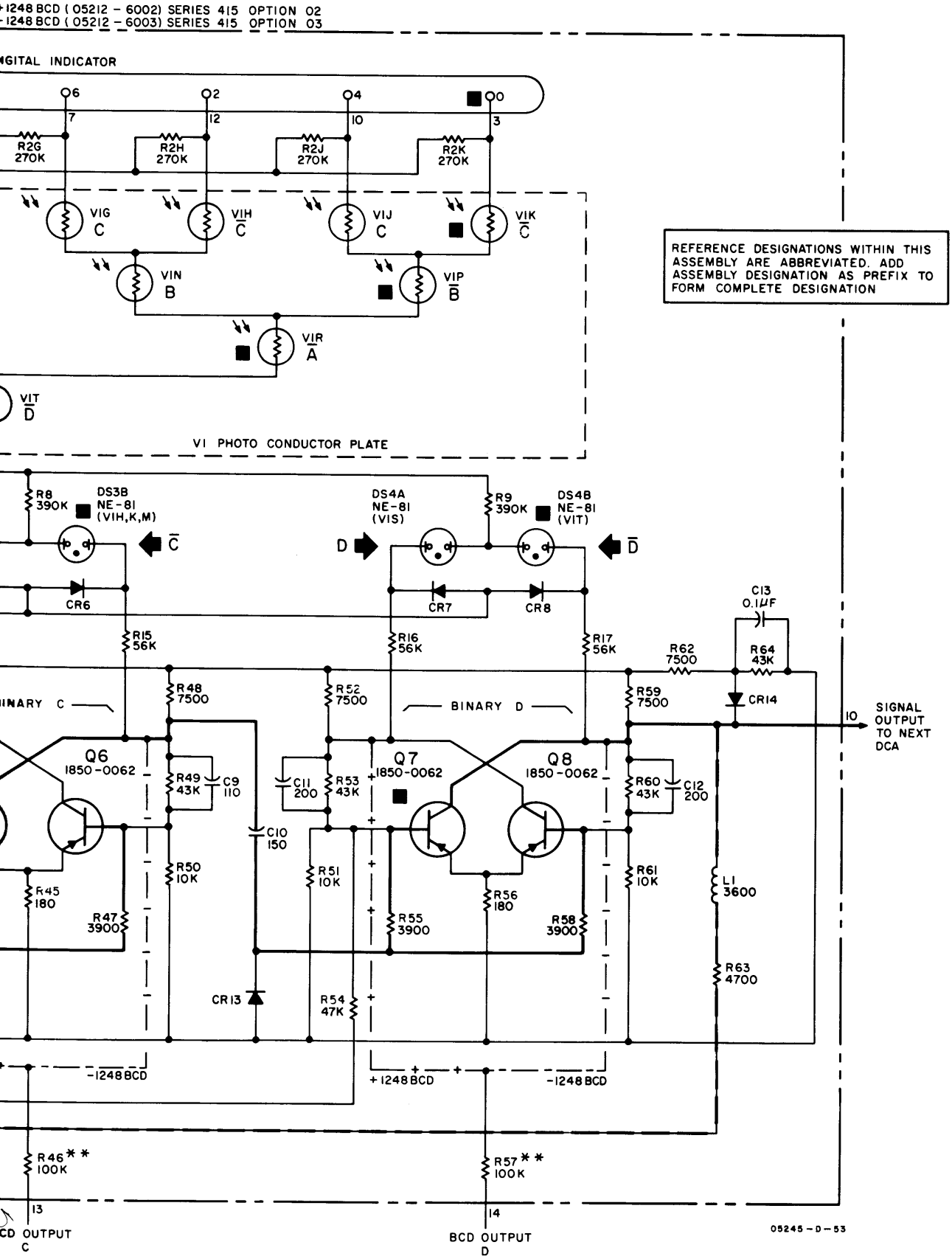

Figure 7-10. A10-A14 Decimal Counter (05212-6002, 6003) Option 02, 03

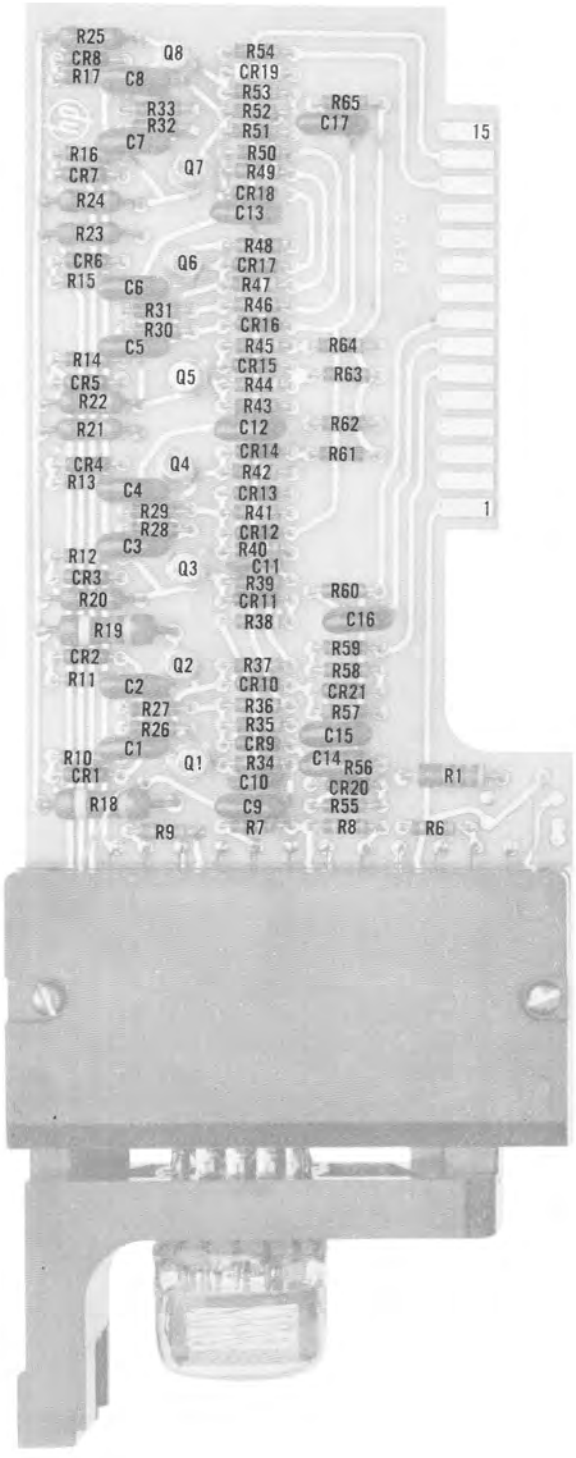
R25
CR8
R17
C8
Q8
R54
CR19
R53
R52
R51
R65
C17
15
R33
R32
C7
R16
CR7
R24
Q7
R50
R49
CR18
C13
R23
R48
CR6
R15
C6
Q6
CR17
R47
R46
CR16
R31
R30
C5
R45
R64
R14
CR5
R22
Q5
CR15
R44
R63
R43
R21
C12
R62
CR14
R61
CR4
R13
C4
Q4
R42
CR13
R41
1
R29
R28
C3
CR12
R40
R12
CR3
R20
Q3
C11
R39
R60
CR11
C16
R19
R38
R59
CR2
R11
C2
Q2
R37
R58
CR10
CR21
R27
R26
C1
R36
R35
R57
C15
CR9
R10
CR1
R18
Q1
R34
C14
R56
R1
C10
CR20
C9
R55
R9
R7
R8
R6

A15,A16

Figure 7-11

A15, A16 5 MHz DECIMAL COUNTER (05232-6010)

NOTES

1. UNLESS OTHERWISE INDICATED:
   RESISTANCE IN OHMS;
   CAPACITANCE IN PICOFARADS
2. FILLED SQUARE (■) INDICATES CONDUCTING ELEMENT FOR DECIMAL "0" (BCD "0000"); FOR DS1-DS4, SECTION "A" LIGHTS ON "1" SECTION "B" LIGHTS ON "0".

REFERENCE DESIGNATIONS

A15 (A16)
C 1-17 CR1-21 DS1-6 Q 1-8 R 1-65 V 1

DELETED:
DS5
R3-5

TRUTH TABLE

DIGIT	4 LINE CODE (0=−, 1=+)				VI	RELEVANT STAGES BINARY			
	D	C	B	A		D	C	B	A
0	0	0	0	0	HPS		■	■	■
1	0	0	0	1	DMR	■		■	■
2	0	0	1	0	FNS		■	■	■
3	0	0	1	1	BLR		■	■	■
4	0	1	1	0	KQT	■	■		■
5	0	1	1	1	JQT	■	■		■
6	1	1	0	0	GPS		■	■	■
7	1	1	0	1	CMR	■		■	■
8	1	1	1	0	ENS	■		■	■
9	1	1	1	1	ALR	■		■	■

PHYSICAL LAYOUT
(PLATE 040-3)

A. CONNECTION TO R2, VI

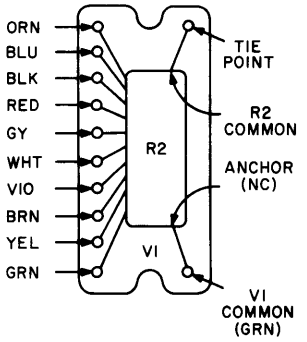

B. LAMP PHOTOCELL MATRIX

VIT VIG	DS4A
VIH VIF VIB	DS4B
VIP VIM	DS2B
VIL VIN	DS2A
VIE VIA VIC	DS3A
VID VIQ	DS3B
VIR VIJ	DS1A
VIK VIS	DS1B

WAVEFORMS

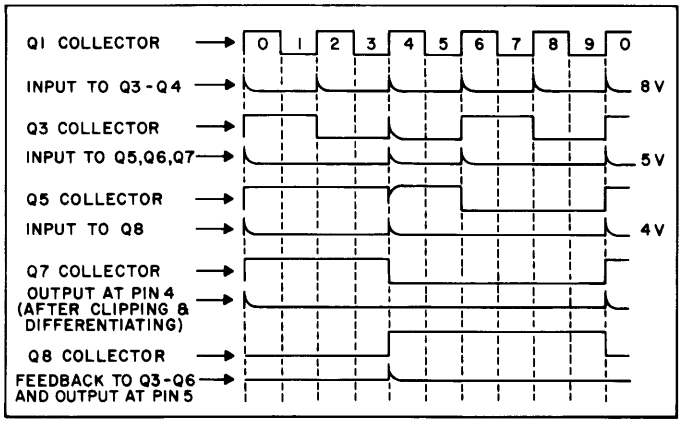

05245-D-51

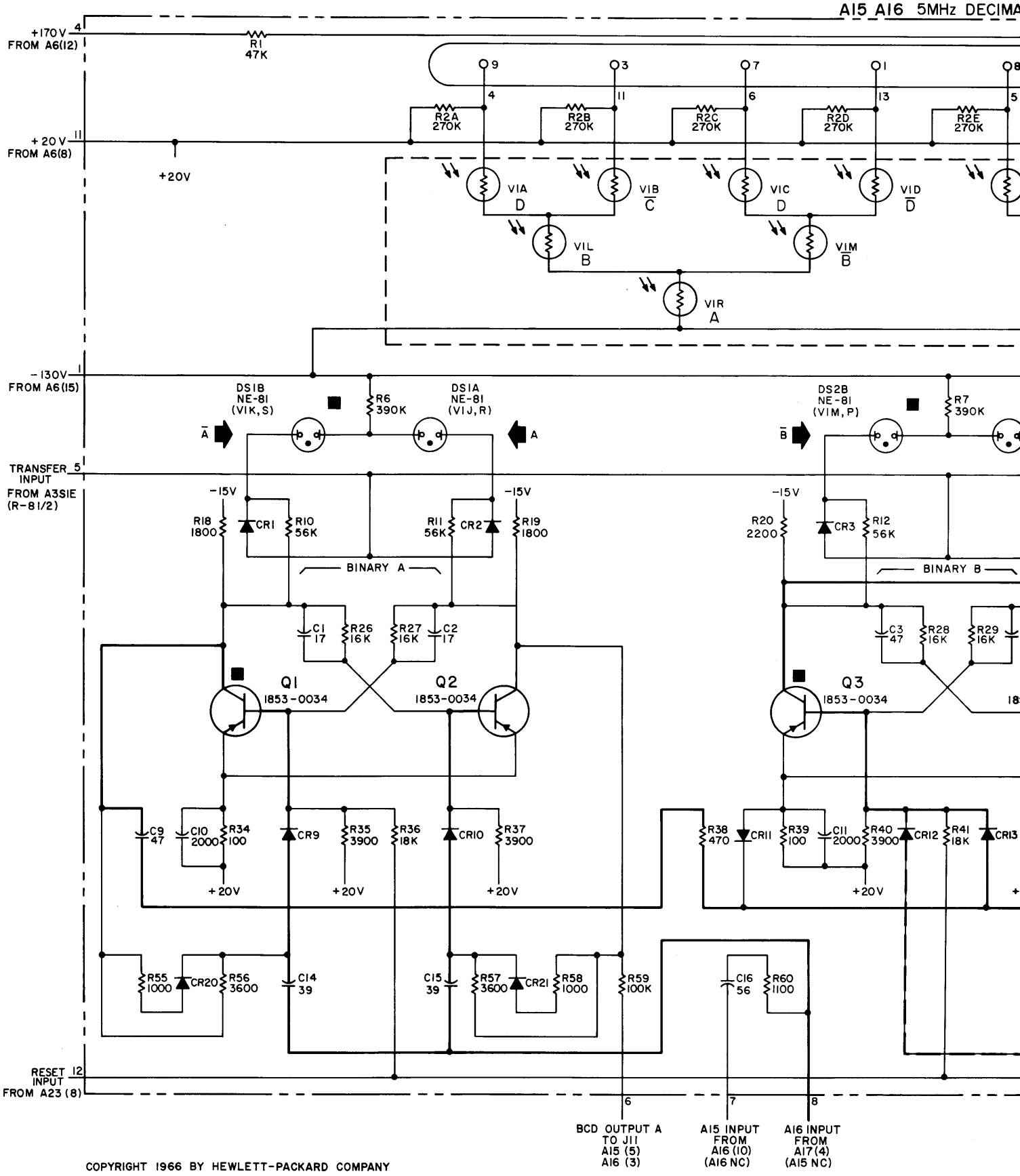

COPYRIGHT 1966 BY HEWLETT-PACKARD COMPANY

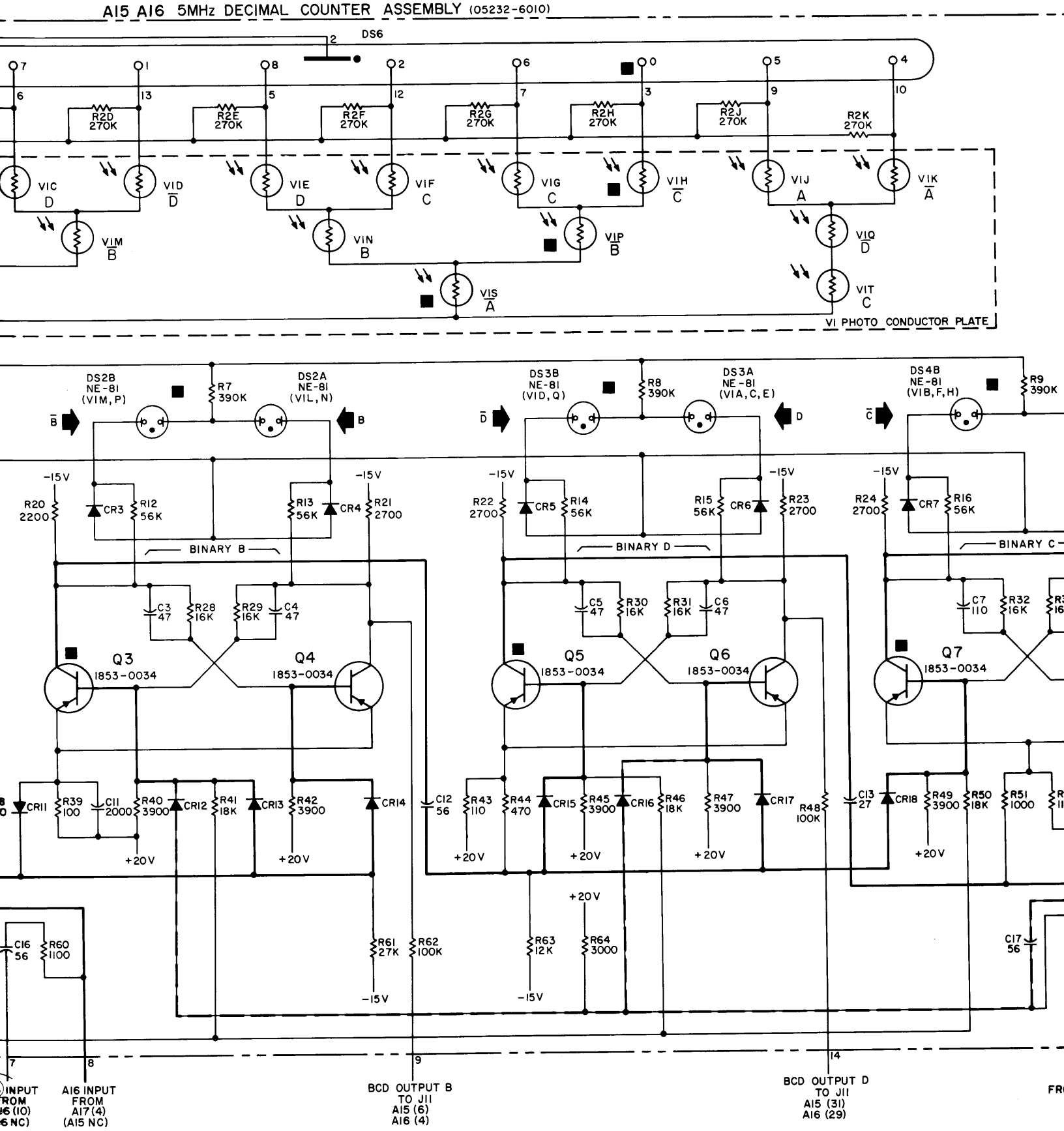

Figure 7-11. A15,

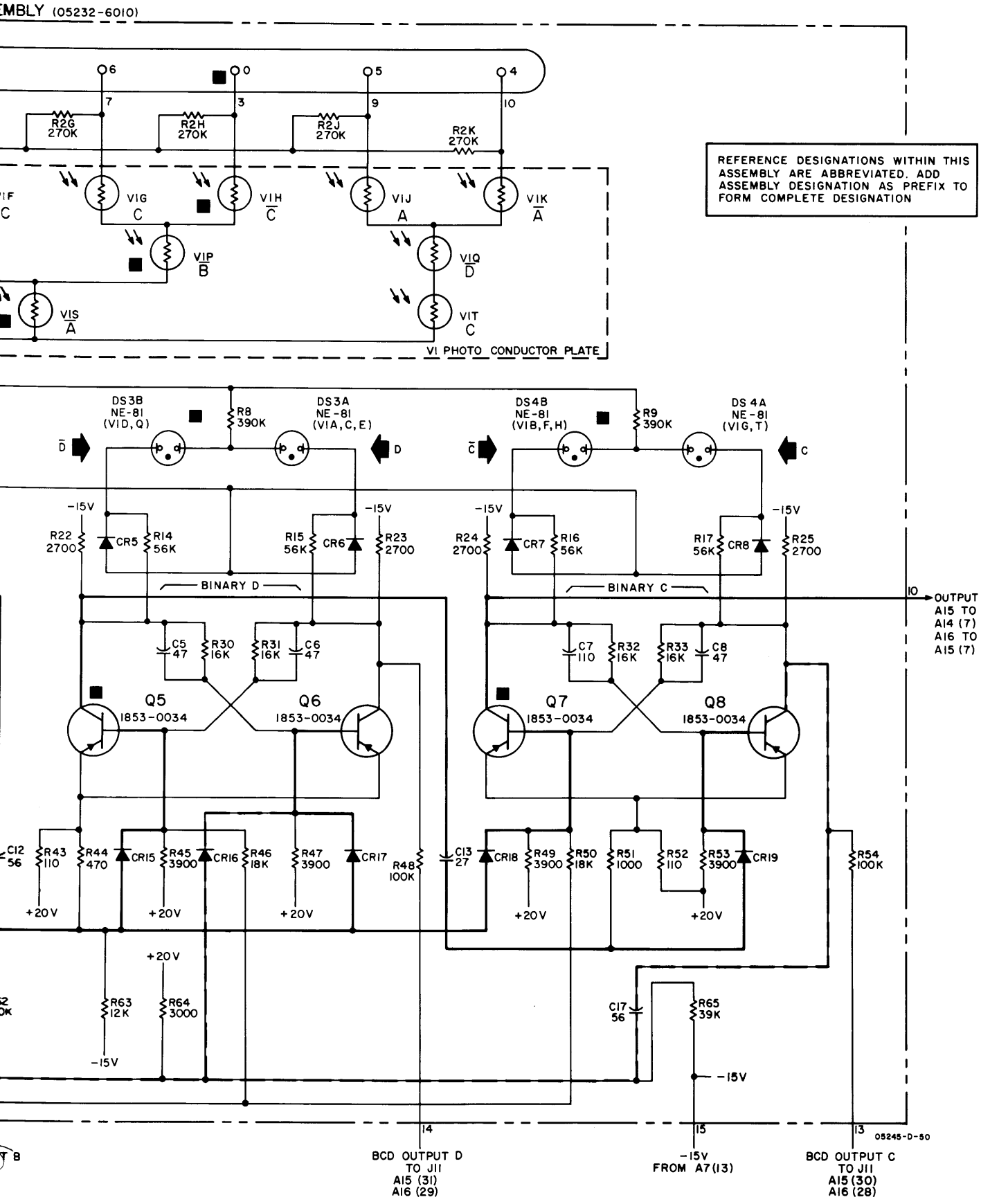

Figure 7-11. A15, A16 5 MHz Decimal Counter (05232-6010)

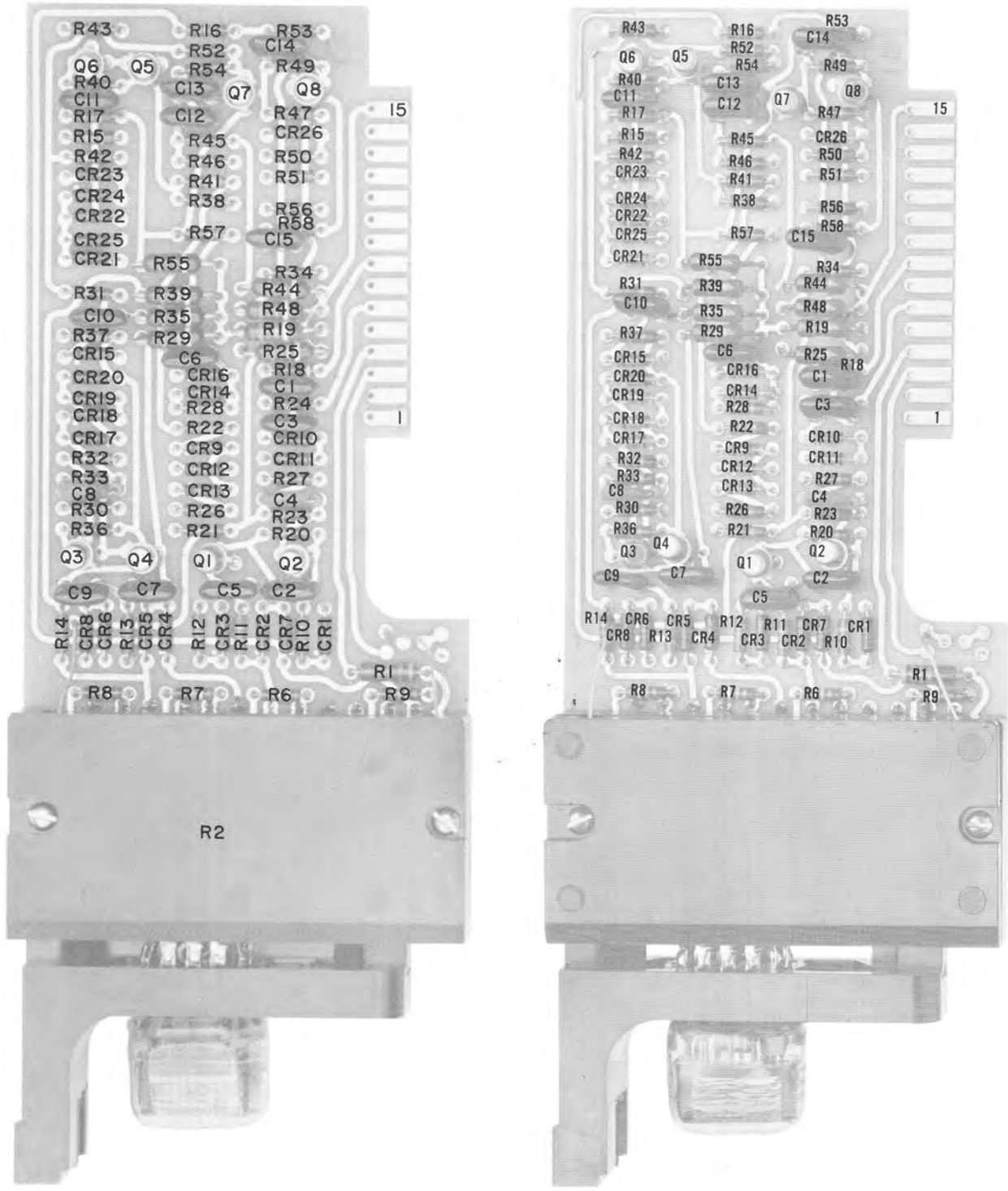
R43
R16
R53
C14
R52
Q6
Q5
R54
R49
R40
C13
Q7
Q8
C11
C12
R17
R47
15
R15
R45
CR26
R42
R46
R50
CR23
R41
R51
CR24
R38
CR22
R56
R58
CR25
R57
C15
CR21
R55
R34
R31
R39
R44
C10
R35
R48
R37
R29
R19
CR15
C6
R25
R18
CR20
CR16
C1
CR19
CR14
R28
C3
CR18
1
CR17
R22
CR10
R32
CR9
CR11
R33
CR12
R27
C8
CR13
C4
R30
R26
R23
R36
R21
R20
Q3
Q4
Q1
Q2
C9
C7
C5
C2
R14
CR8
CR6
R13
CR5
CR4
R12
CR3
R11
CR2
CR7
R10
CR1
R1
R8
R7
R6
R9
R2
+1248
-1248

A15, A16

Figure 7-12

A15,A16 DECIMAL COUNTER (05232-6002,6003)
OPTION 02, 03

NOTES

1. UNLESS OTHERWISE INDICATED:
   RESISTANCE IN OHMS;
   CAPACITANCE IN PICOFARADS
2. REFERENCE DESIGNATIONS IN PARENTHESES INDICATE LIGHT DESTINATION FOR DS1 – DS4. LIGHT SOURCE IS NOTED NEAR EACH V1 SECTION.
3. FOR DS1 – DS4, SECTION A LIGHTS ON "1"; SECTION B LIGHTS ON "0"
4. FILLED SQUARE (■) INDICATES CONDUCTING ELEMENT FOR DECIMAL "0" (BCD "0000")
5. OUTPUT CODE:
   OPTION 02: 1=+18V, 0=-8V
   OPTION 03: 1=-8V, 0=+18V
6. THE 05232-6002 DCA'S ARE USED IN OPTION 02 INSTRUMENTS ("1" STATE POSITIVE BCD OUTPUT). THE 05232-6003 DCA'S ARE USED IN OPTION 03 INSTRUMENTS ("1" STATE NEGATIVE BCD OUTPUT). THIS SCHEMATIC IS FOR BOTH DCA'S. THE ASSEMBLIES ARE IDENTICAL WITH ONE EXCEPTION. THE OPTION 02 DCA'S (05232-6002) HAVE RESISTORS MARKED WITH DOUBLE ASTERISKS (**) CONNECTED TO COLLECTORS AS SHOWN BY — + — + — LINES. THE OPTION 03 DCA'S (05232-6003) HAVE THESE RESISTORS CONNECTED TO OPPOSITE COLLECTORS AS SHOWN BY — — — — — LINES.

REFERENCE DESIGNATIONS

A15, A16
C 1 – 15 CR1 – 26 DS1 – 6 Q 1 – 8 R 1 – 58 V 1

OMITTED: DS5
R3-5

TRUTH TABLE

DIGIT	4 LINE CODE				RELEVANT STAGES				
					V1	BINARY			
	D	C	B	A		D	C	B	A
0	0	0	0	0	KPRT	■	■	■	■
1	0	0	0	1	FMQT	■	■	■	
2	0	0	1	0	HNRT	■	■		■
3	0	0	1	1	EMQT	■	■		
4	0	1	0	0	JPRT	■		■	■
5	0	1	0	1	DLQT	■		■	
6	0	1	1	0	GNRT	■			■
7	0	1	1	1	CLQT	■			
8	1	0	0	0	BS	■			■
9	1	0	0	1	AS	■			

WAVEFORMS

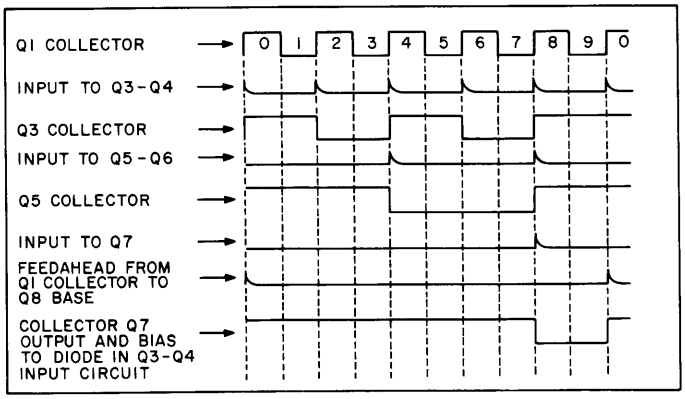

05245-D-54

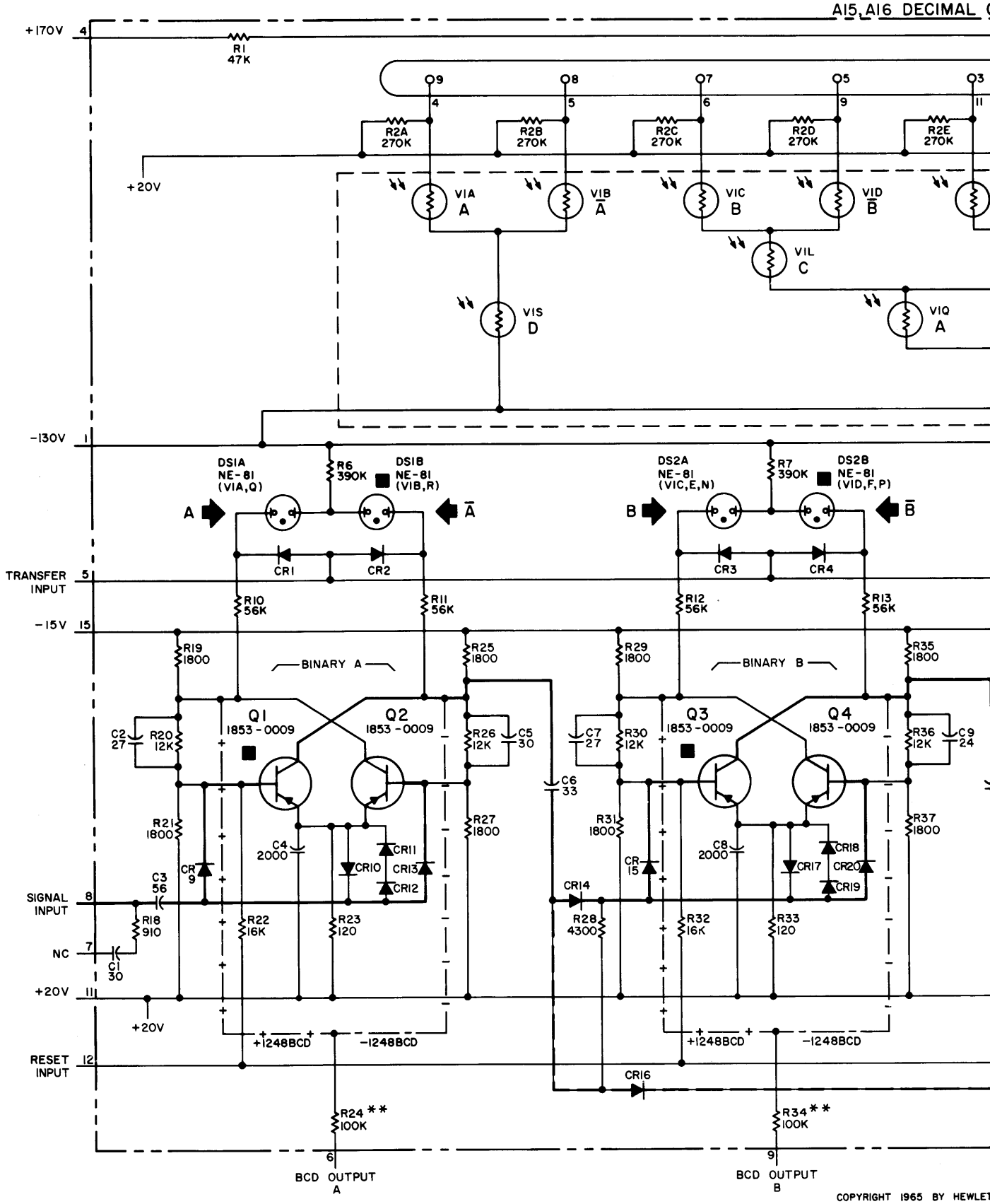

COPYRIGHT 1965 BY HEWLET

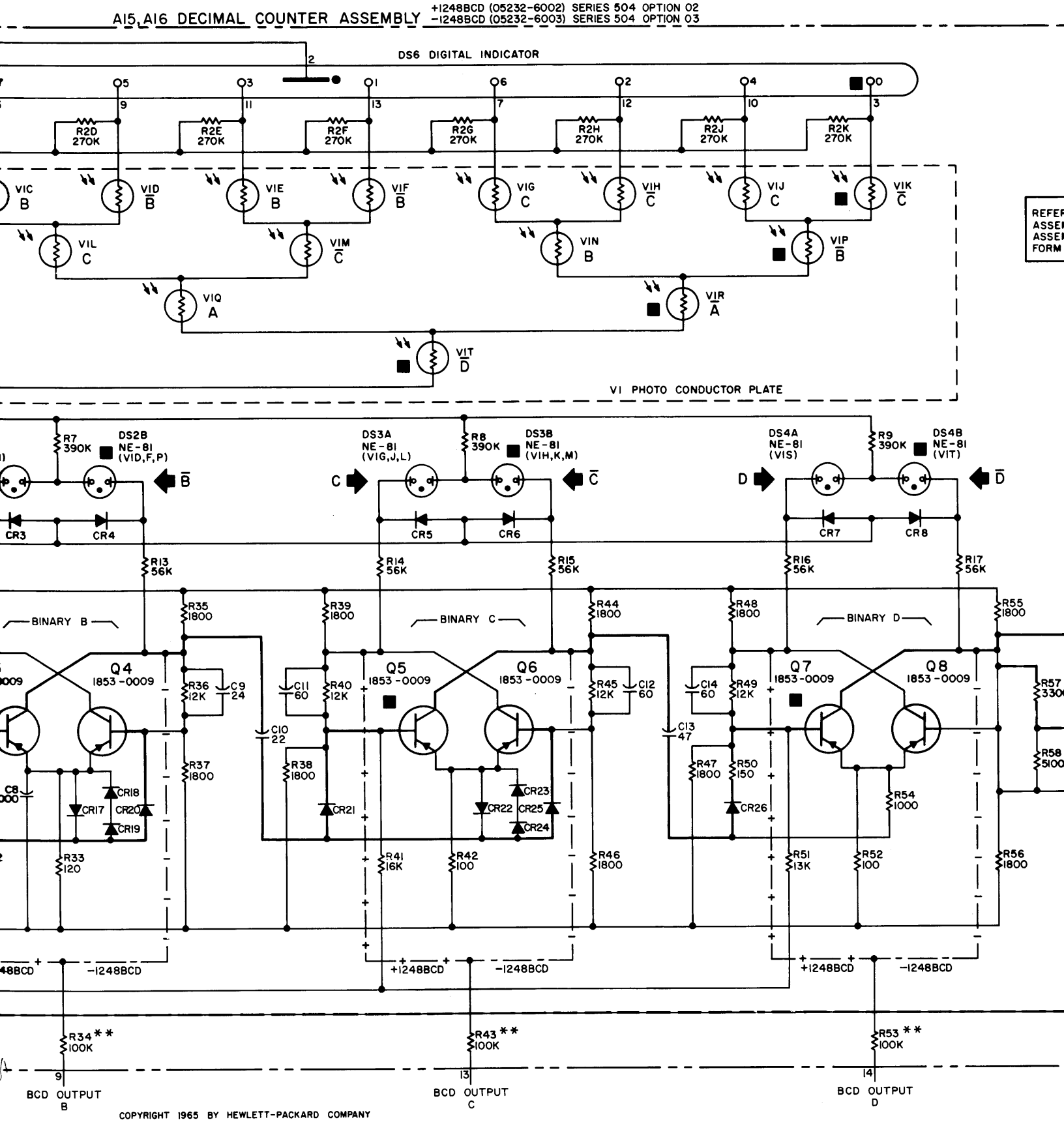

COPYRIGHT 1965 BY HEWLETT-PACKARD COMPANY

Figure 7-12. A15,

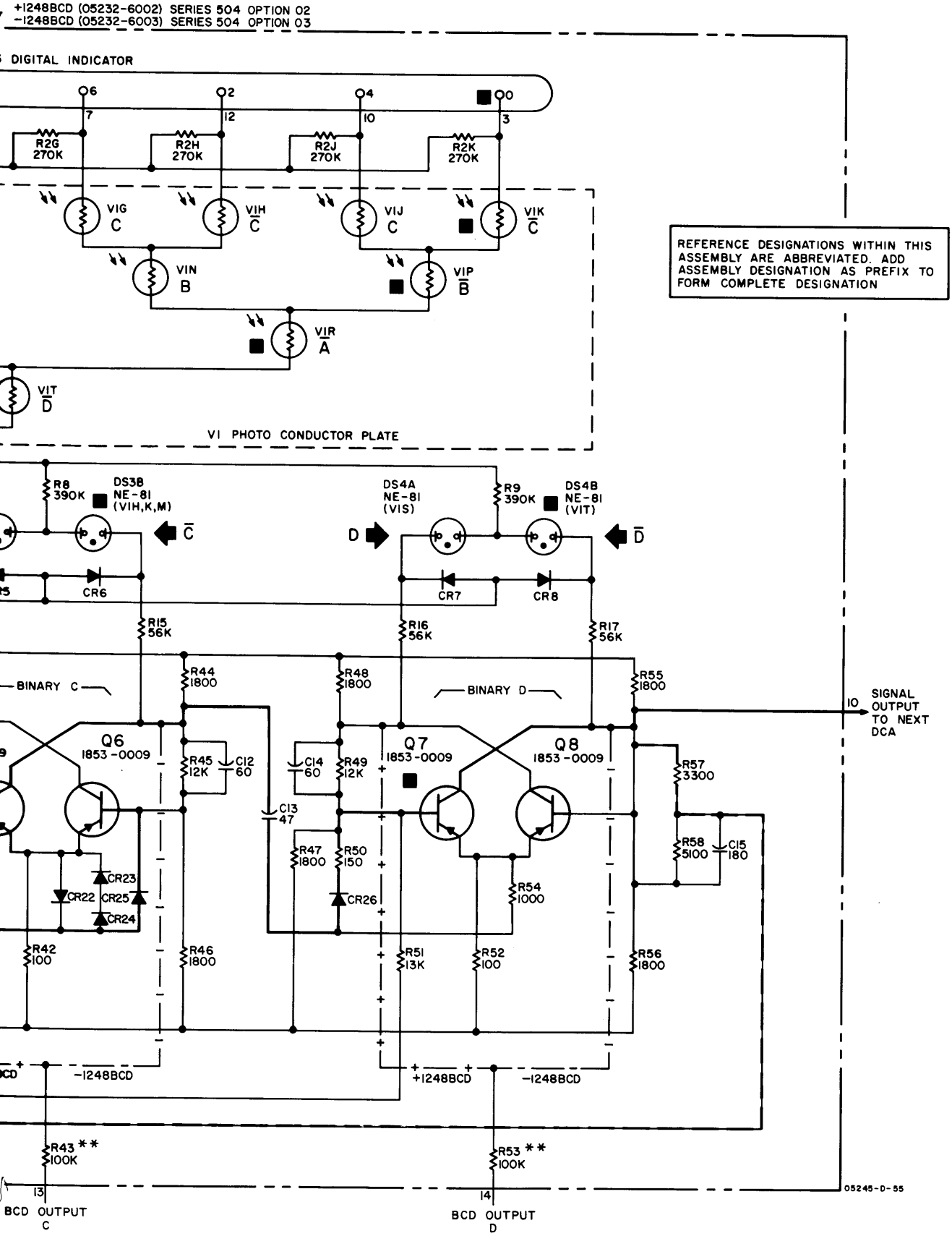

Figure 7-12. A15, A16 Decimal Counter (05232-6002, 6003) Option 02, 03

Figure 7-13

A17 DECIMAL COUNTER

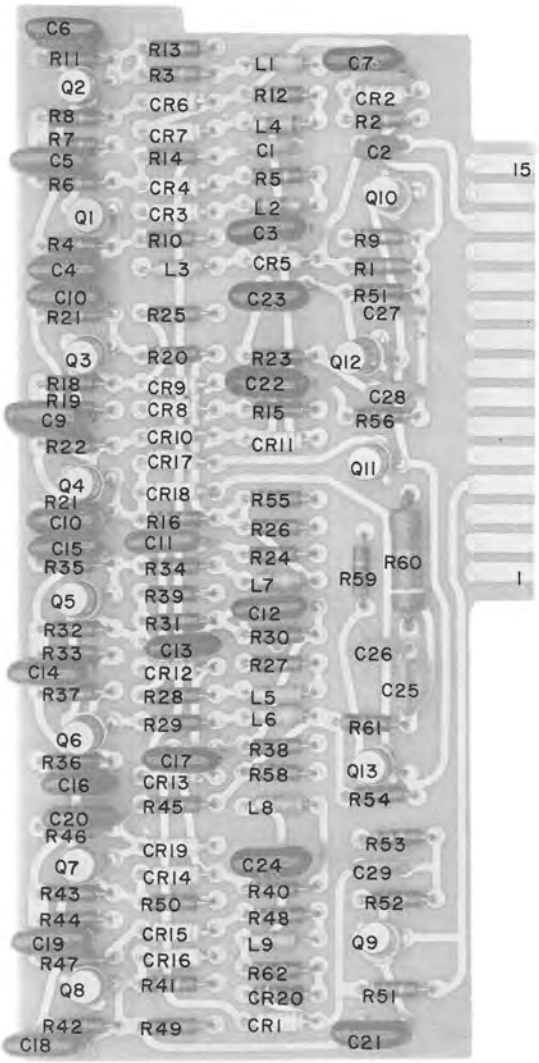
C6
R11
Q2
R8
R7
C5
R6
Q1
R4
C4
C10
R21
Q3
R18
R19
C9
R22
Q4
R21
C10
C15
R35
Q5
R32
R33
C14
R37
Q6
R36
C16
C20
R46
Q7
R43
R44
C19
R47
Q8
R42
C18
R13
R3
CR6
CR7
R14
CR4
CR3
R10
L3
R25
R20
CR9
CR8
CR10
CR17
CR18
R16
C11
R34
R39
R31
C13
CR12
R28
R29
C17
CR13
R45
CR19
CR14
R50
CR15
CR16
R41
R49
L1
R12
L4
C1
R5
L2
C3
CR5
C23
R23
C22
R15
CR11
R55
R26
R24
L7
C12
R30
R27
L5
L6
R38
R58
L8
C24
R40
R48
L9
R62
CR20
CR1
C7
CR2
R2
C2
Q10
R9
R1
R51
C27
Q12
C28
R56
Q11
R60
R59
C26
C25
R61
Q13
R54
R53
C29
R52
Q9
R51
C21
15
1

A17

NOTES

1. UNLESS OTHERWISE INDICATED:
   RESISTANCE IN OHMS
   CAPACITANCE IN PICOFARADS
   INDUCTANCE IN MICROHENRIES

2. FILLED SQUARE (■) INDICATES CONDUCTING TRANSISTOR FOLLOWING RESET (BCD=0000)

REFERENCE DESIGNATIONS

NO PREFIX	PREFIX A17
C11-13,15	C1-29 CR1-20 L1-9 Q1-13
R8	R1-62

COPYRIGHT 1965 BY HEWLETT-PACKARD COMPANY

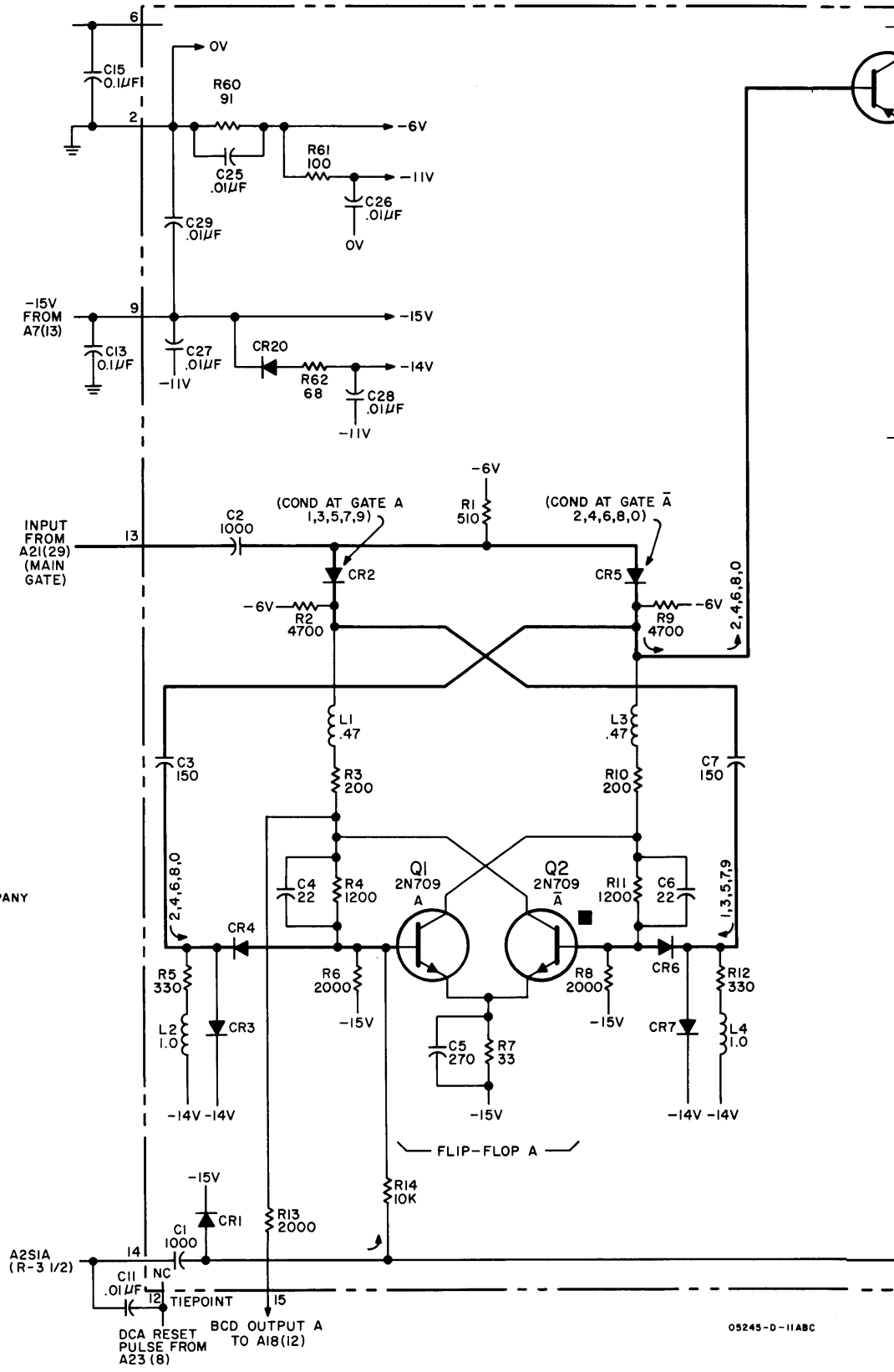

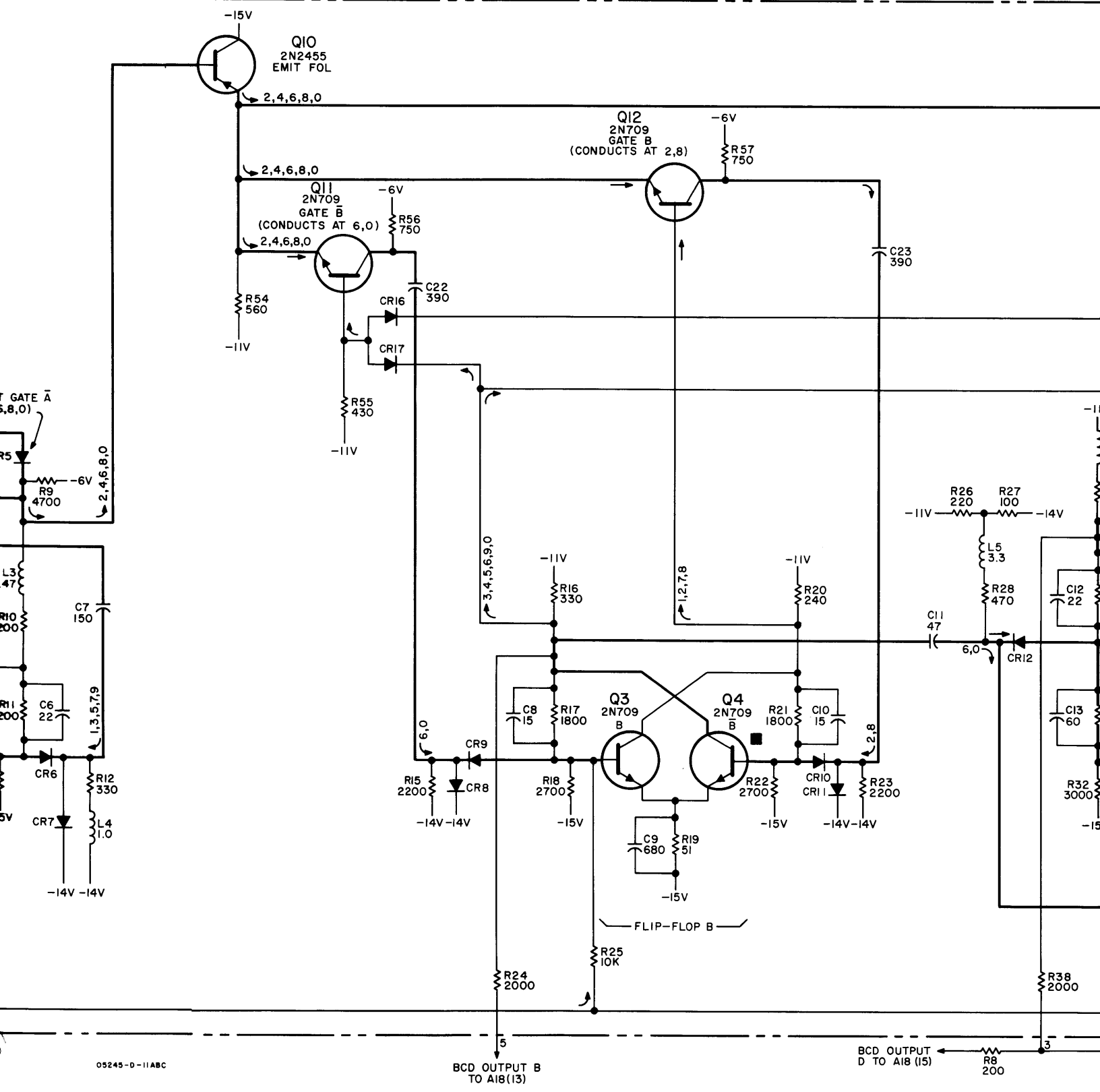
-15V
Q10
2N2455
EMIT FOL
2,4,6,8,0
Q12
2N709
GATE B
(CONDUCTS AT 2,8)
-6V
R57
750
2,4,6,8,0
Q11
2N709
GATE B
(CONDUCTS AT 6,0)
-6V
R56
750
2,4,6,8,0
C23
390
C22
390
R54
560
-11V
CR16
CR17
R55
430
-11V
T GATE A
6,8,0)
R5
-6V
R9
4700
2,4,6,8,0
L3
.47
R10
200
C7
150
R11
200
C6
22
1,3,5,7,9
CR6
R12
330
CR7
L4
1.0
-14V -14V
3,4,5,6,9,0
-11V
R16
330
1,2,7,8
-11V
R20
240
R26
220
R27
100
-11V
-14V
L5
3.3
R28
470
C12
22
C11
47
6,0
CR12
C8
15
R17
1800
Q3
2N709
B
Q4
2N709
B
R21
1800
C10
15
6,0
CR9
2,8
R15
2200
CR8
R18
2700
R22
2700
CR10
CR11
R23
2200
-14V -14V
-15V
-15V
-14V -14V
C9
680
R19
51
-15V
C13
60
R32
3000
FLIP-FLOP B
R25
10K
R24
2000
R38
2000
5
BCD OUTPUT B
TO A18(13)
BCD OUTPUT
D TO A18 (15)
R8
200
3
05245-D-11ABC

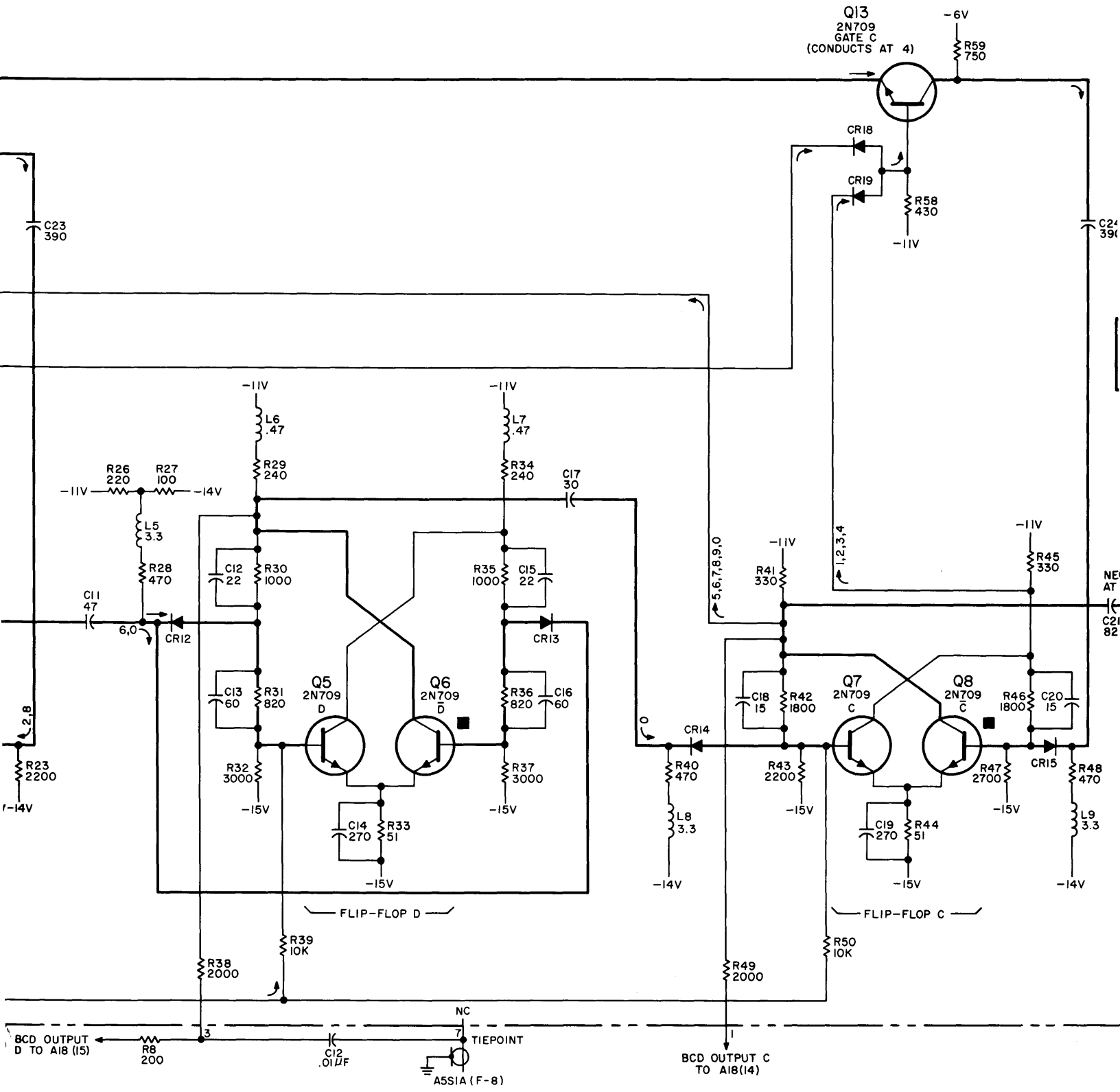
Q13
2N709
GATE C
(CONDUCTS AT 4)
-6V
R59
750
CR18
CR19
R58
430
-11V
C23
390
L6
.47
L7
.47
R29
240
R34
240
C17
30
R26
220
R27
100
-11V
-14V
L5
3.3
R28
470
C11
47
6,0
CR12
C12
22
R30
1000
R35
1000
C15
22
CR13
C13
60
R31
820
Q5
2N709
D
Q6
2N709
D̄
R36
820
C16
60
R32
3000
R37
3000
-15V
C14
270
R33
51
FLIP-FLOP D
5,6,7,8,9,0
1,2,3,4
R41
330
R45
330
C18
15
R42
1800
Q7
2N709
C
Q8
2N709
C̄
R46
1800
C20
15
CR14
CR15
R40
470
L8
3.3
R43
2200
R47
2700
R48
470
L9
3.3
C19
270
R44
51
FLIP-FLOP C
R23
2200
R39
10K
R38
2000
R50
10K
R49
2000
NC
TIEPOINT
BCD OUTPUT
D TO A18 (15)
R8
200
C12
.01μF
A5S1A (F-8)
BCD OUTPUT C
TO A18(14)

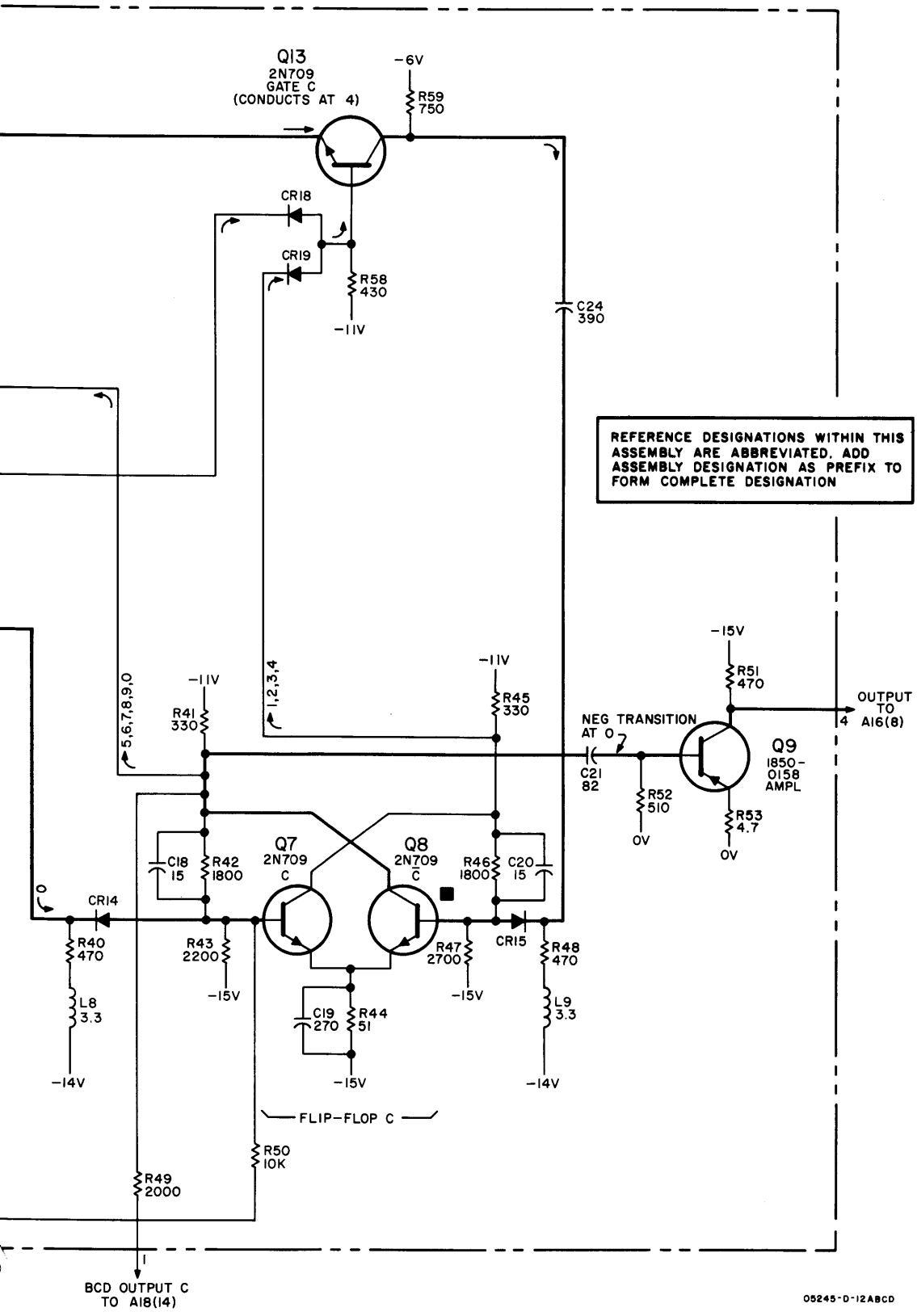

Figure 7-13. A17 Decimal Counter

Figure 7-14

A18 READOUT (5245L-4B)

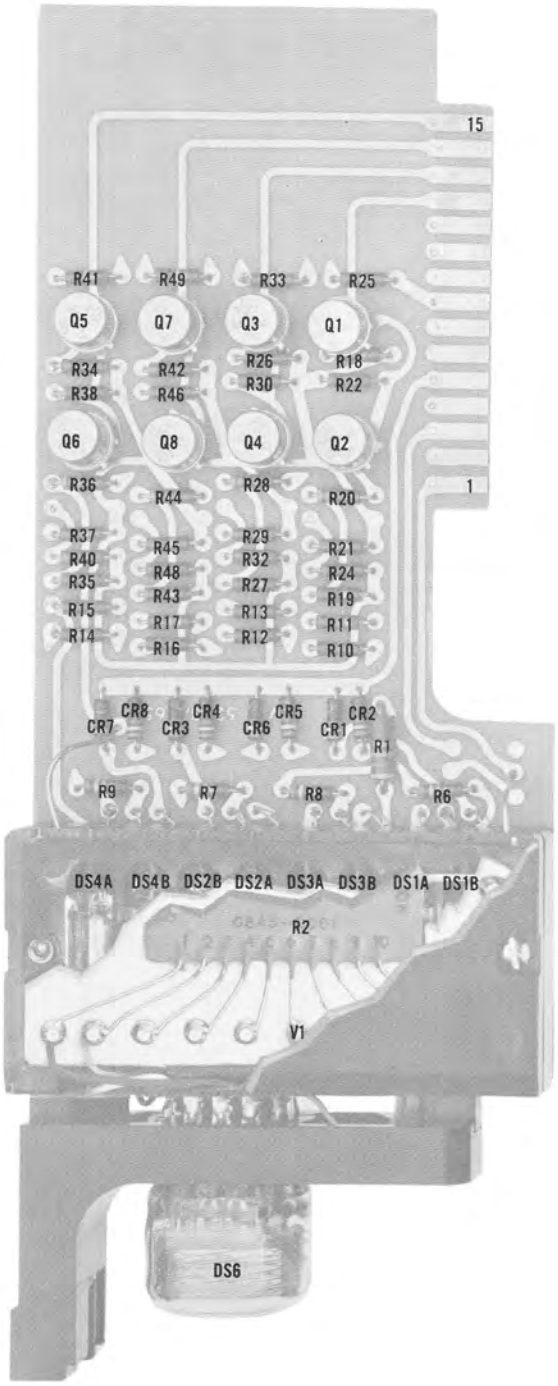
15
1
R41
R49
R33
R25
Q5
Q7
Q3
Q1
R34
R38
R42
R46
R26
R30
R18
R22
Q6
Q8
Q4
Q2
R36
R44
R28
R20
R37
R40
R35
R15
R14
R45
R48
R43
R17
R16
R29
R32
R27
R13
R12
R21
R24
R19
R11
R10
CR7
CR8
CR3
CR4
CR6
CR5
CR1
CR2
R1
R9
R7
R8
R6
DS4A
DS4B
DS2B
DS2A
DS3A
DS3B
DS1A
DS1B
R2
V1
DS6

A18

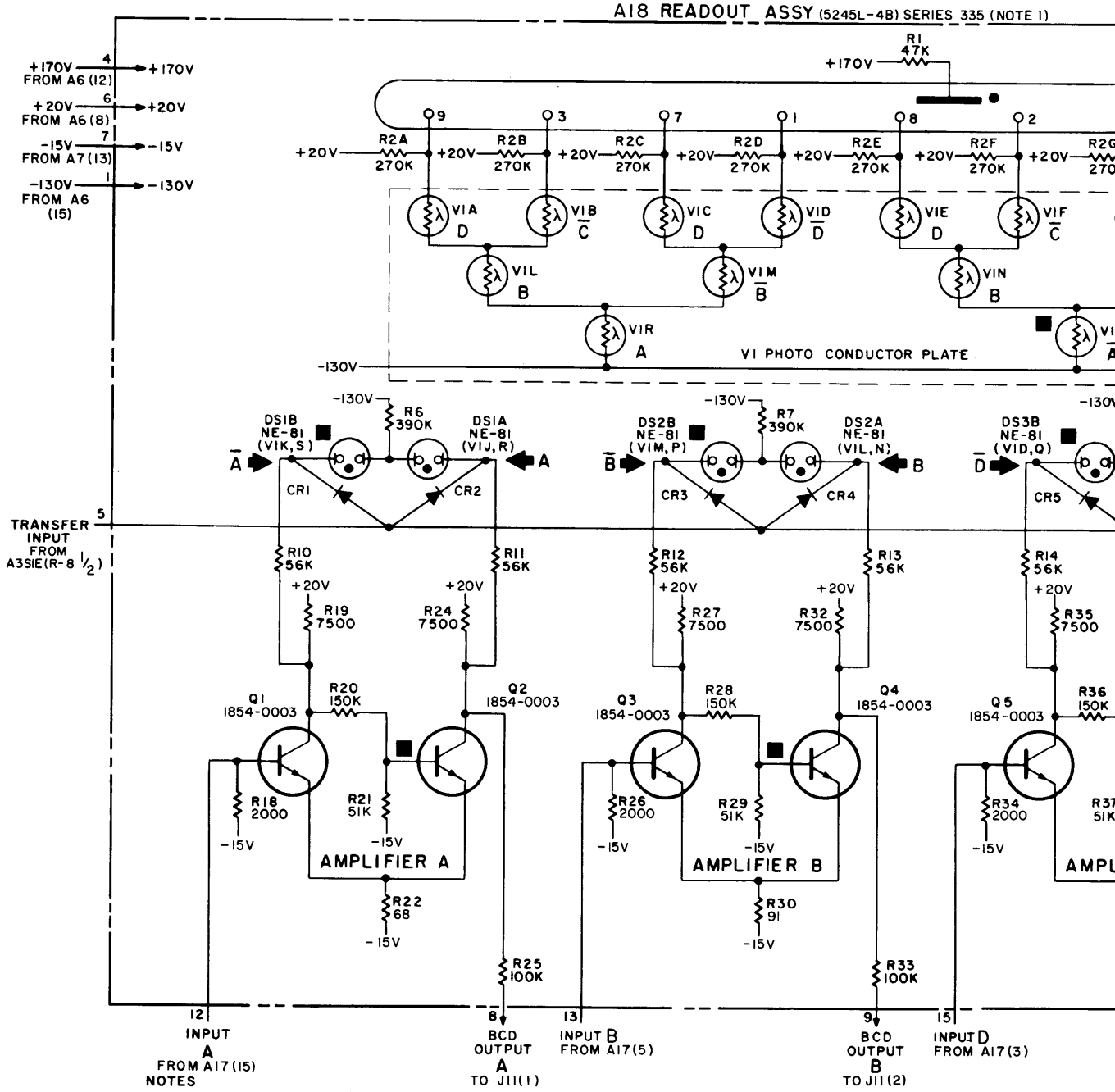

NOTES

1. REFERENCE DESIGNATIONS WITHIN READOUT ASSEMBLY ARE INCOMPLETE; TO FORM COMPLETE REFERENCE DESIGNATION, ADD ASSEMBLY DESIGNATION A18 AS PREFIX TO INDICATED DESIGNATION.
2. UNLESS OTHERWISE INDICATED: RESISTANCE IN OHMS; CAPACITANCE IN PICOFARADS
3. REFERENCE DESIGNATIONS IN PARENTHESES INDICATE LIGHT DESTINATION FOR DS1-DS4; LIGHT SOURCE IS NOTED NEAR EACH VI SECTION.
4. FILLED SQUARE (■) INDICATES CONDUCTING ELEMENT FOR DECIMAL "0" (BCD "0000").

COPYRIGHT 1965 BY HE

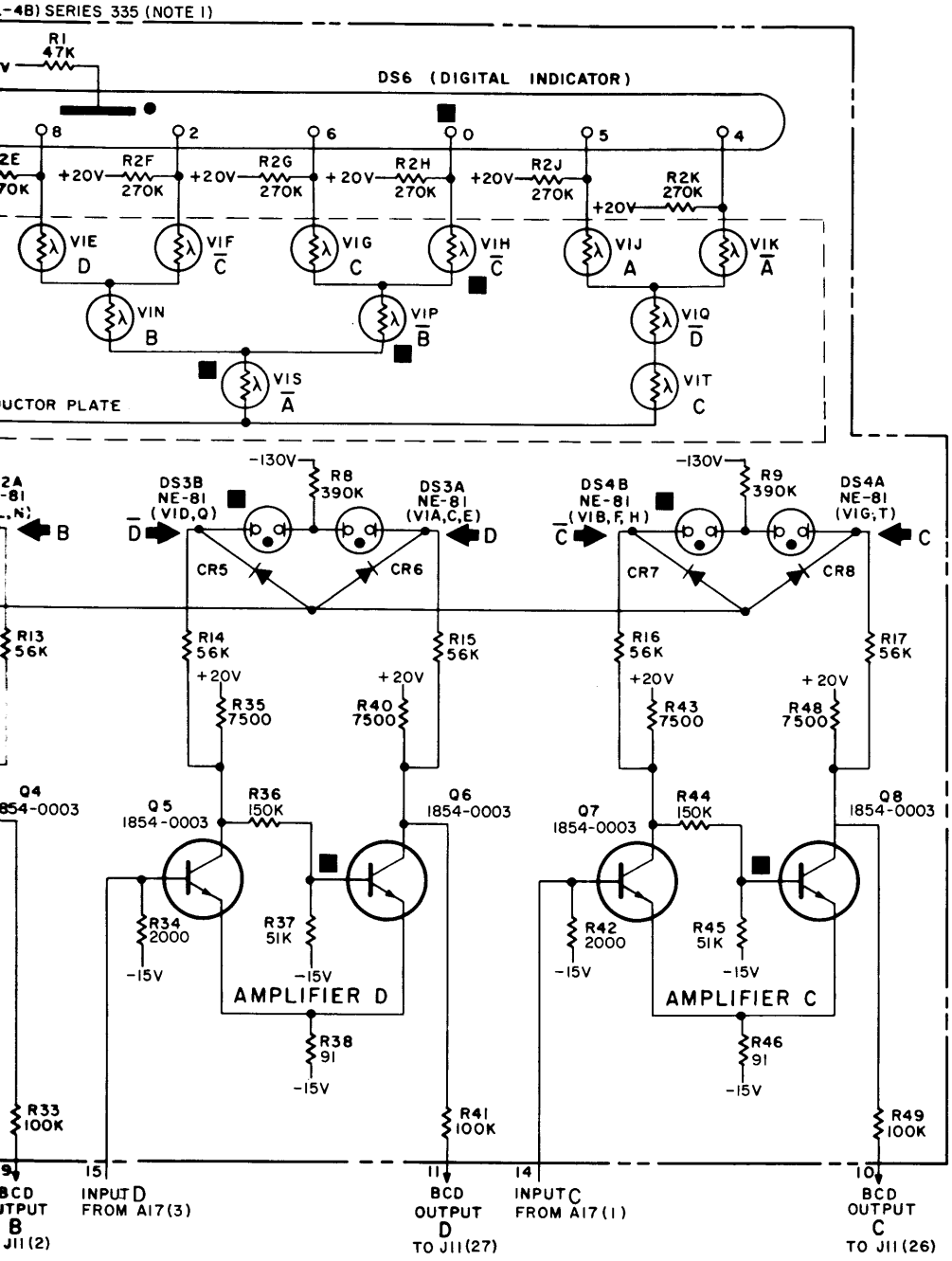

WAVEFORMS

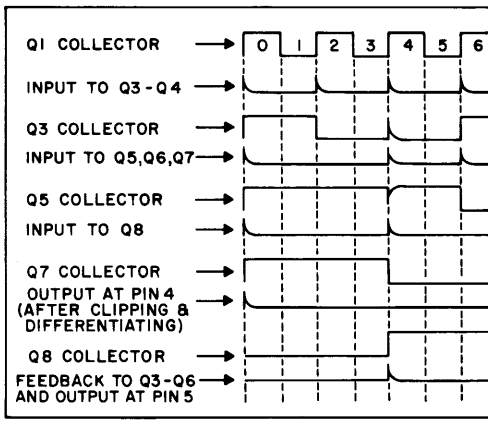

PHYSICAL LAYOUT

A. CONNECTION TO R2, V1

B. LAMP PI MAT

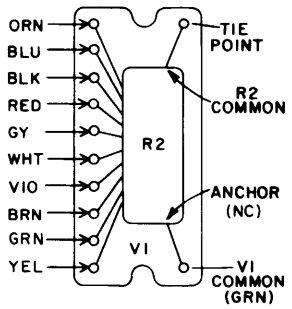

DIGIT	4 LINE CODE (0=−, 1=+)				RELEVANT STA			
	D	C	B	A	V1	AMPLIFI D	C	B
0	0	0	0	0	HPS		■	■
1	0	0	0	1	DMR	■		
2	0	0	1	0	FNS		■	■
3	0	0	1	1	BLR		■	■
4	0	1	1	0	KQT	■	■	
5	0	1	1	1	JQT	■	■	
6	1	1	0	0	GPS		■	■
7	1	1	0	1	CMR	■		■
8	1	1	1	0	ENS	■		■
9	1	1	1	1	ALR	■		

COPYRIGHT 1965 BY HEWLETT-PACKARD COMPANY

REFERENCE DESIGNATIONS

CR1 - 8
DS1 - 6
Q1 - 8
R1 - 49
V1

OMITTED:
DS5
R3-5,23,31,39,47

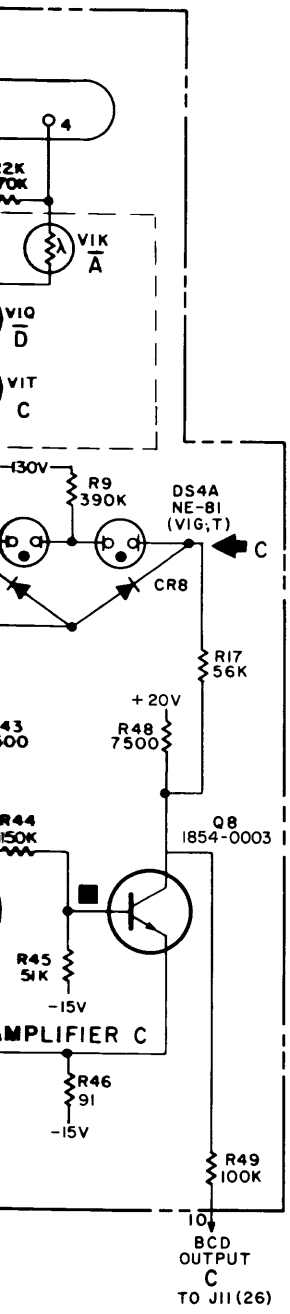

WAVEFORMS

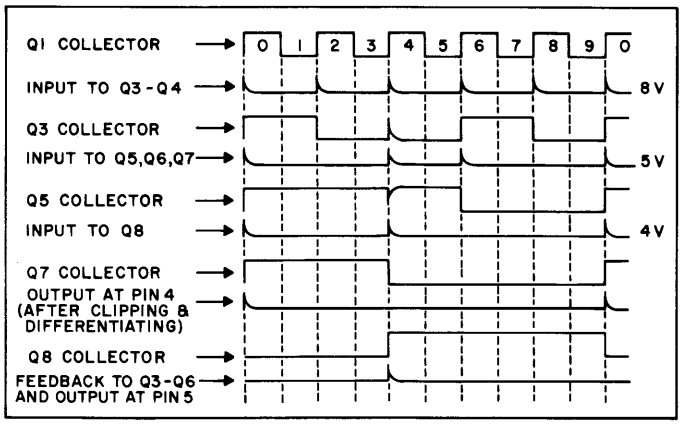

PHYSICAL LAYOUT

A. CONNECTION TO R2, VI

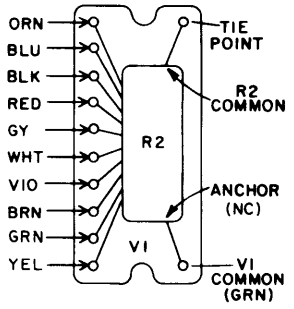

B. LAMP PHOTOCELL MATRIX

C	VIT VIG	DS4A
$\overline{C}$	VIH VIF VIB	DS4B
$\overline{B}$	VIP VIM	DS2B
B	VIL VIN	DS2A
D	VIE VIA VIC	DS3A
$\overline{D}$	VID VIQ	DS3B
A	VIR VIJ	DS1A
$\overline{A}$	VIK VIS	DS1B

DIGIT	4 LINE CODE (0=−, 1=+)				RELEVANT STAGES				
					VI	AMPLIFIER			
	D	C	B	A		D	C	B	A
0	0	0	0	0	HPS		■	■	■
1	0	0	0	1	DMR	■		■	■
2	0	0	1	0	FNS		■	■	■
3	0	0	1	1	BLR		■	■	■
4	0	1	1	0	KQT	■	■		■
5	0	1	1	1	JQT	■	■		■
6	1	1	0	0	GPS		■	■	■
7	1	1	0	1	CMR	■		■	■
8	1	1	1	0	ENS	■		■	■
9	1	1	1	1	ALR	■		■	■

REFERENCE DESIGNATIONS

CR1 - 8
DS1 - 6
Q1 - 8
R1 - 49
VI

OMITTED:
DS5
R3-5,23,31,39,47

05245-D-27ABC

Figure 7-14. A18 Readout

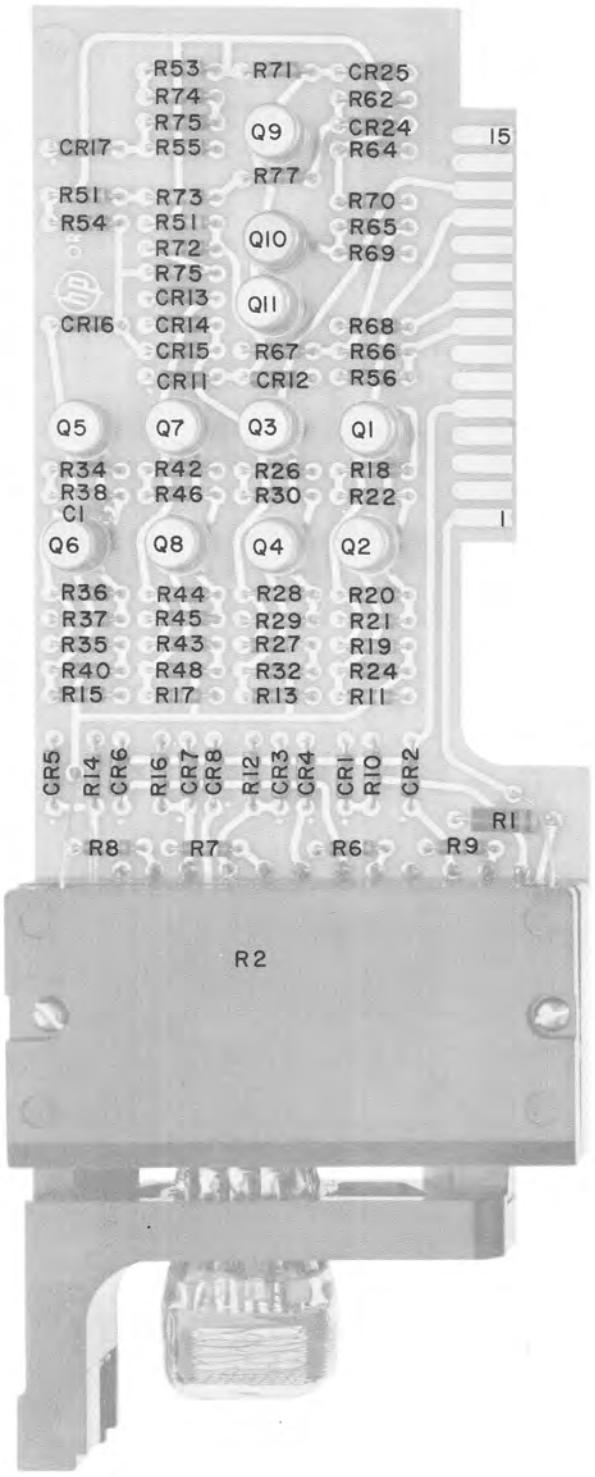
R53
R74
R75
CRI7
R55
R71
Q9
CR25
R62
CR24
R64
15
R77
R51
R54
R73
R51
R72
R75
CRI3
CRI6
CRI4
CRI5
CRII
Q10
QII
R70
R65
R69
R68
R67
R66
CRI2
R56
Q5
Q7
Q3
QI
R34
R38
CI
R42
R46
R26
R30
R18
R22
1
Q6
Q8
Q4
Q2
R36
R37
R35
R40
R15
R44
R45
R43
R48
R17
R28
R29
R27
R32
R13
R20
R21
R19
R24
RII
CR5
RI4
CR6
RI6
CR7
CR8
RI2
CR3
CR4
CRI
RIO
CR2
RI
R8
R7
R6
R9
R2

A18 +1248

Figure 7-15

A18 READOUT (05245-6001) OPTION 02

NOTES

1. UNLESS OTHERWISE INDICATED:
   RESISTANCE IN OHMS;
   CAPACITANCE IN PICOFARADS
2. REFERENCE DESIGNATIONS IN PARENTHESES INDICATE LIGHT DESTINATION FOR DS1 - DS4. LIGHT SOURCE IS NOTED NEAR EACH V1 SECTION.
3. FOR DS1 - DS4, SECTION A LIGHTS ON "1"; SECTION B LIGHTS ON "0"
4. FILLED SQUARE (■) INDICATES CONDUCTING ELEMENT FOR DECIMAL "0" (BCD "0000")
5. OUTPUT CODE:
   OPTION 02: 1 = +18V, 0 = −8V

REFERENCE DESIGNATIONS

A18
C 1 CR1 — 25 DS1 — 6 Q 1 — 11 R 1 — 71 V 1

OMITTED:
CR9, 10, 18 - 23
DS5
R3 - 5, 23, 31, 39, 47
50, 57 - 61, 63

DELETED:
R25, 33, 41, 49

TRUTH TABLE

DIGIT	4 LINE CODE (0 = −, 1 = +)				RELEVANT STAGES				
					V1	BINARY			
	D	C	B	A		D	C	B	A
0	0	0	0	0	KPRT	■	■	■	■
1	0	0	0	1	FMQT	■	■	■	■
2	0	0	1	0	HNRT	■	■	■	■
3	0	0	1	1	EMQT	■	■	■	■
4	0	1	0	0	JPRT	■	■	■	■
5	0	1	0	1	DLQT	■	■	■	■
6	0	1	1	0	GNRT	■	■	■	■
7	0	1	1	1	CLQT	■	■	■	■
8	1	0	0	0	BS	■			■
9	1	0	0	1	AS	■			■

WAVEFORMS

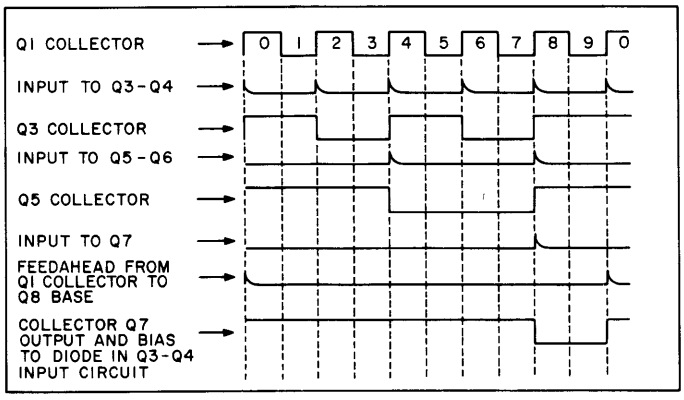

05245-D-57

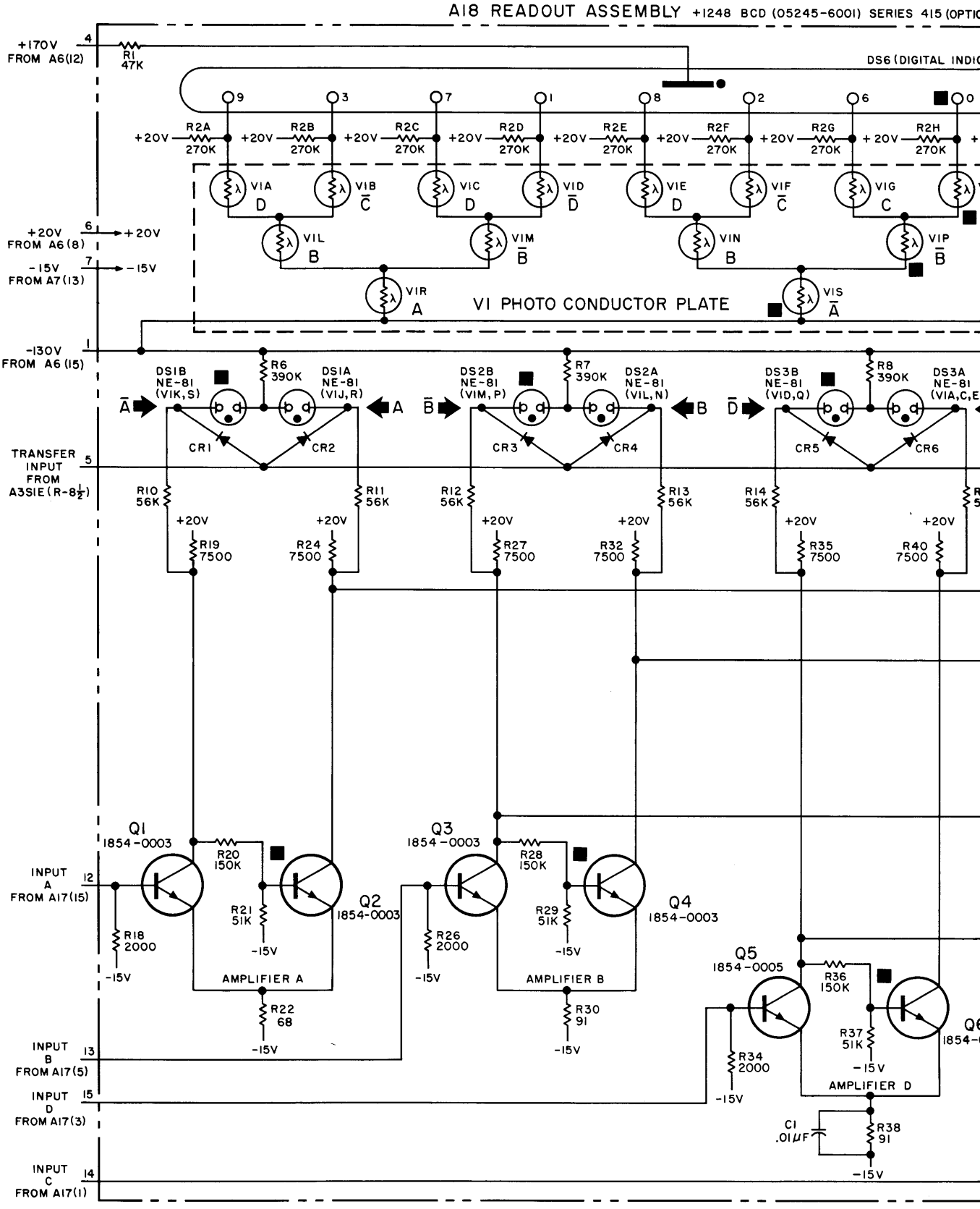
A18 READOUT ASSEMBLY +1248 BCD (05245-6001) SERIES 415 (OPTIC
+170V FROM A6(12)
4
R1 47K
DS6 (DIGITAL INDIC
9 3 7 1 8 2 6 0
R2A 270K
R2B 270K
R2C 270K
R2D 270K
R2E 270K
R2F 270K
R2G 270K
R2H 270K
+20V
VIA D
VIB C
VIC D
VID D
VIE D
VIF C
VIG C
VIL B
VIM B
VIN B
VIP B
VIR A
VIS A
VI PHOTO CONDUCTOR PLATE
+20V FROM A6(8)
6
+20V
-15V FROM A7(13)
7
-15V
-130V FROM A6(15)
1
DS1B NE-81 (VIK,S)
DS1A NE-81 (VIJ,R)
DS2B NE-81 (VIM,P)
DS2A NE-81 (VIL,N)
DS3B NE-81 (VID,Q)
DS3A NE-81 (VIA,C,E
R6 390K
R7 390K
R8 390K
CR1
CR2
CR3
CR4
CR5
CR6
TRANSFER INPUT FROM A3S1E (R-8 1/2)
5
R10 56K
R11 56K
R12 56K
R13 56K
R14 56K
R19 7500
R24 7500
R27 7500
R32 7500
R35 7500
R40 7500
Q1 1854-0003
Q2 1854-0003
Q3 1854-0003
Q4 1854-0003
Q5 1854-0005
R20 150K
R21 51K
R28 150K
R29 51K
R36 150K
R37 51K
R18 2000
R22 68
R26 2000
R30 91
R34 2000
R38 91
C1 .01μF
AMPLIFIER A
AMPLIFIER B
AMPLIFIER D
INPUT A FROM A17(15)
12
INPUT B FROM A17(5)
13
INPUT D FROM A17(3)
15
INPUT C FROM A17(1)
14

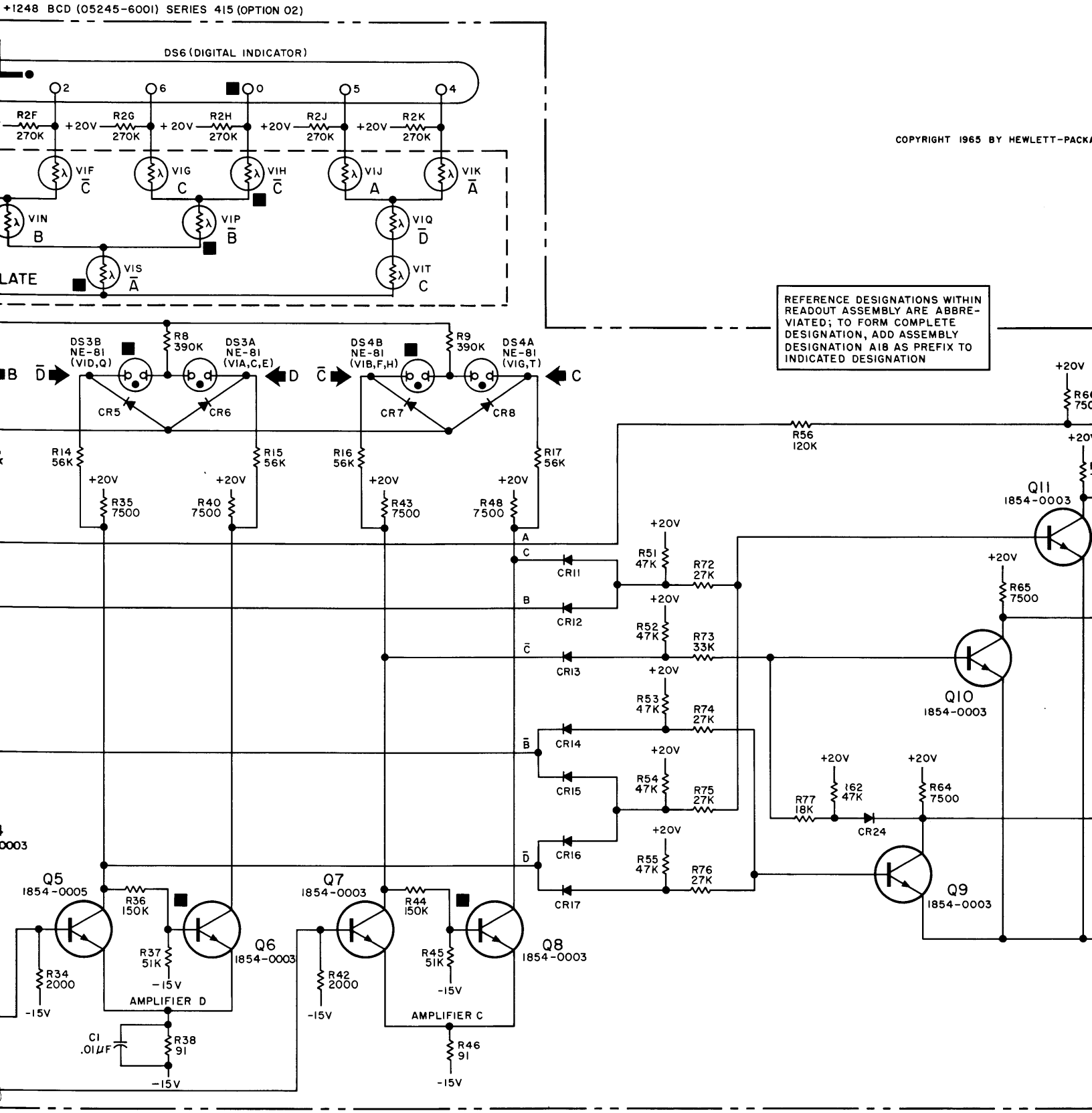
+1248 BCD (05245-6001) SERIES 415 (OPTION 02)
DS6 (DIGITAL INDICATOR)
2
6
0
5
4
R2F 270K
R2G 270K
R2H 270K
R2J 270K
R2K 270K
+20V
VIF C̄
VIG C
VIH C̄
VIJ A
VIK Ā
VIN B
VIP B̄
VIQ D̄
VIS Ā
VIT C
LATE
COPYRIGHT 1965 BY HEWLETT-PACKA
REFERENCE DESIGNATIONS WITHIN READOUT ASSEMBLY ARE ABBREVIATED; TO FORM COMPLETE DESIGNATION, ADD ASSEMBLY DESIGNATION A18 AS PREFIX TO INDICATED DESIGNATION
DS3B NE-81 (VID,Q)
DS3A NE-81 (VIA,C,E)
DS4B NE-81 (VIB,F,H)
DS4A NE-81 (VIG,T)
R8 390K
R9 390K
B̄
D
C̄
C
CR5
CR6
CR7
CR8
R14 56K
R15 56K
R16 56K
R17 56K
R35 7500
R40 7500
R43 7500
R48 7500
R56 120K
Q11 1854-0003
R51 47K
R52 47K
R53 47K
R54 47K
R55 47K
R72 27K
R73 33K
R74 27K
R75 27K
R76 27K
CR11
CR12
CR13
CR14
CR15
CR16
CR17
R65 7500
Q10 1854-0003
R77 18K
162 47K
R64 7500
CR24
Q9 1854-0003
Q5 1854-0005
Q7 1854-0003
R36 150K
R44 150K
R37 51K
R45 51K
Q6 1854-0003
Q8 1854-0003
R34 2000
R42 2000
-15V
AMPLIFIER D
AMPLIFIER C
C1 .01μF
R38 91
R46 91

Figure 7-1

COPYRIGHT 1965 BY HEWLETT-PACKARD COMPANY

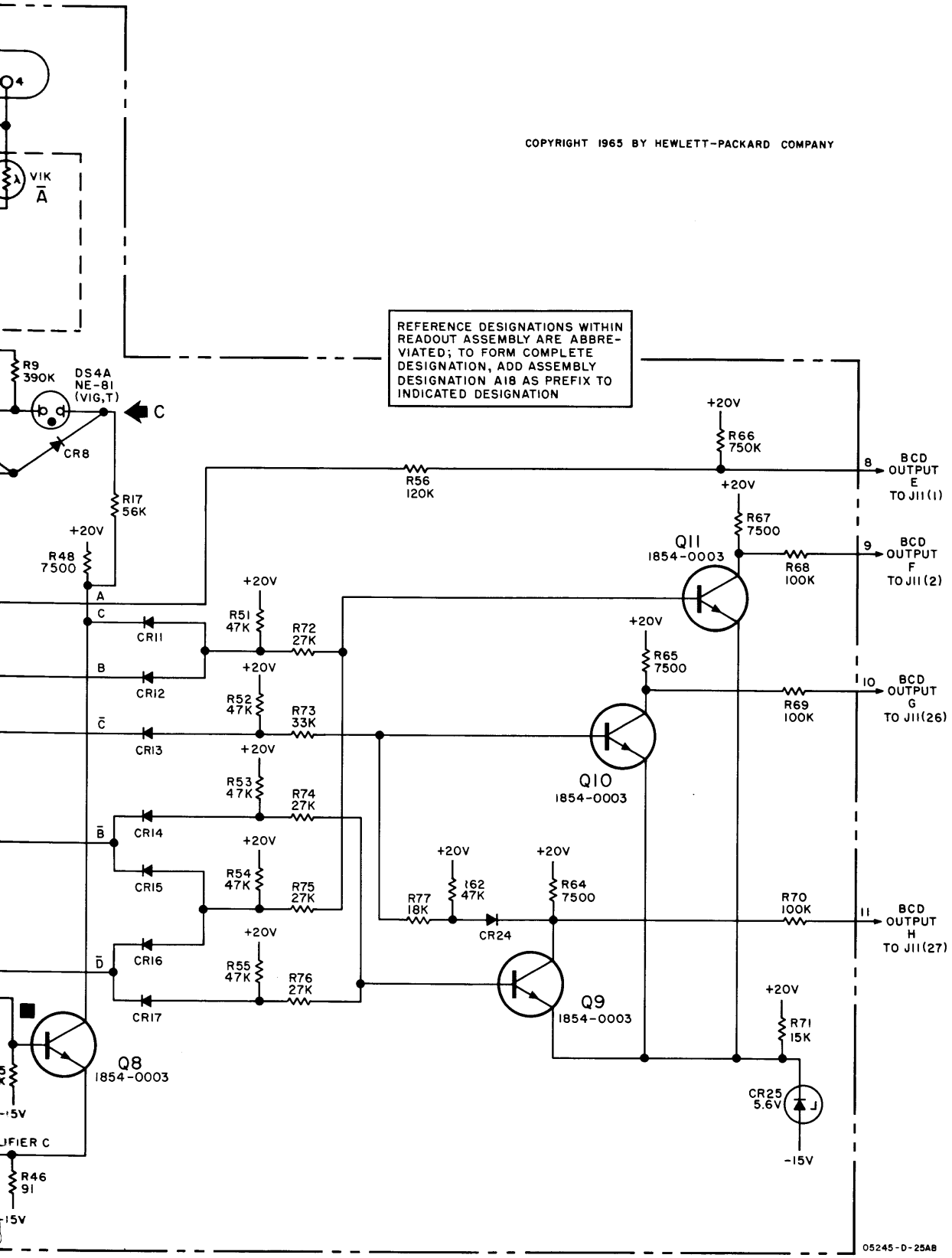

Figure 7-15. A18 Readout (05245-6001) Option 02

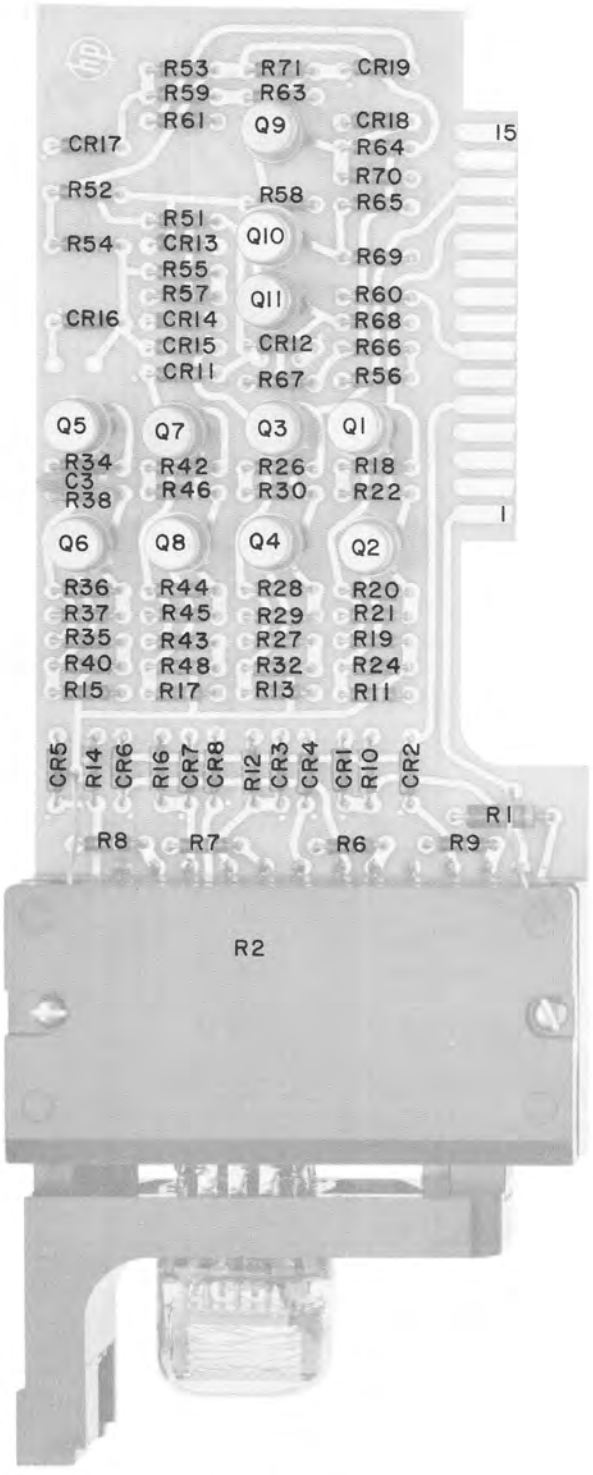
R53
R59
R61
CR17
R52
R54
R51
CR13
R55
R57
CR16
CR14
CR15
CR11
R71
R63
Q9
R58
Q10
Q11
CR12
R67
CR19
CR18
R64
R70
R65
R69
R60
R68
R66
R56
15
Q5
Q7
Q3
Q1
R34
C3
R38
R42
R46
R26
R30
R18
R22
1
Q6
Q8
Q4
Q2
R36
R37
R35
R40
R15
R44
R45
R43
R48
R17
R28
R29
R27
R32
R13
R20
R21
R19
R24
R11
CR5
R14
CR6
R16
CR7
CR8
R12
CR3
CR4
CR1
R10
CR2
R1
R8
R7
R6
R9
R2

A18 -1248

Figure 7-16

A18 READOUT (05245-6003) OPTION 03

NOTES

1. UNLESS OTHERWISE INDICATED:
   RESISTANCE IN OHMS;
   CAPACITANCE IN PICOFARADS
2. REFERENCE DESIGNATIONS IN PARENTHESES INDICATE LIGHT DESTINATION FOR DS1 - DS4. LIGHT SOURCE IS NOTED NEAR EACH V1 SECTION.
3. FOR DS1 - DS4, SECTION A LIGHTS ON "1"; SECTION B LIGHTS ON "0"
4. FILLED SQUARE (■) INDICATES CONDUCTING ELEMENT FOR DECIMAL "0" (BCD "0000")
5. OUTPUT CODE:
   OPTION 03: 1= -8V, 0= +18V

REFERENCE DESIGNATIONS

A18
C 3 CR1 - 19 DS1 - 6 Q 1 - 11 R 1 - 71 V 1

OMITTED:
CR 9, 10
DS 5
R3-5, 23, 31, 39, 47, 50, 62
DELETED:
R25, 33, 41, 49
C1, 2

TRUTH TABLE

DIGIT	4 LINE CODE (0= +, 1= -)				RELEVANT STAGES				
					V1	BINARY			
	D	C	B	A		D	C	B	A
0	0	0	0	0	KPRT	■	■	■	■
1	0	0	0	1	FMQT	■	■	■	■
2	0	0	1	0	HNRT	■	■	■	■
3	0	0	1	1	EMQT	■	■	■	■
4	0	1	0	0	JPRT	■	■	■	■
5	0	1	0	1	DLQT	■	■	■	■
6	0	1	1	0	GNRT	■	■	■	■
7	0	1	1	1	CLQT	■	■	■	■
8	1	0	0	0	BS	■			■
9	1	0	0	1	AS	■			■

WAVEFORMS

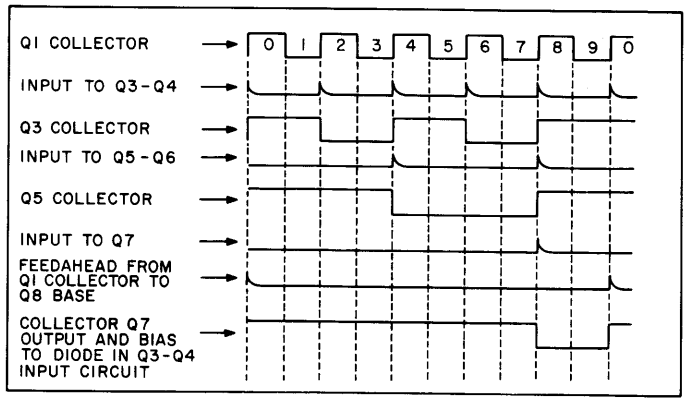

05245-D-56

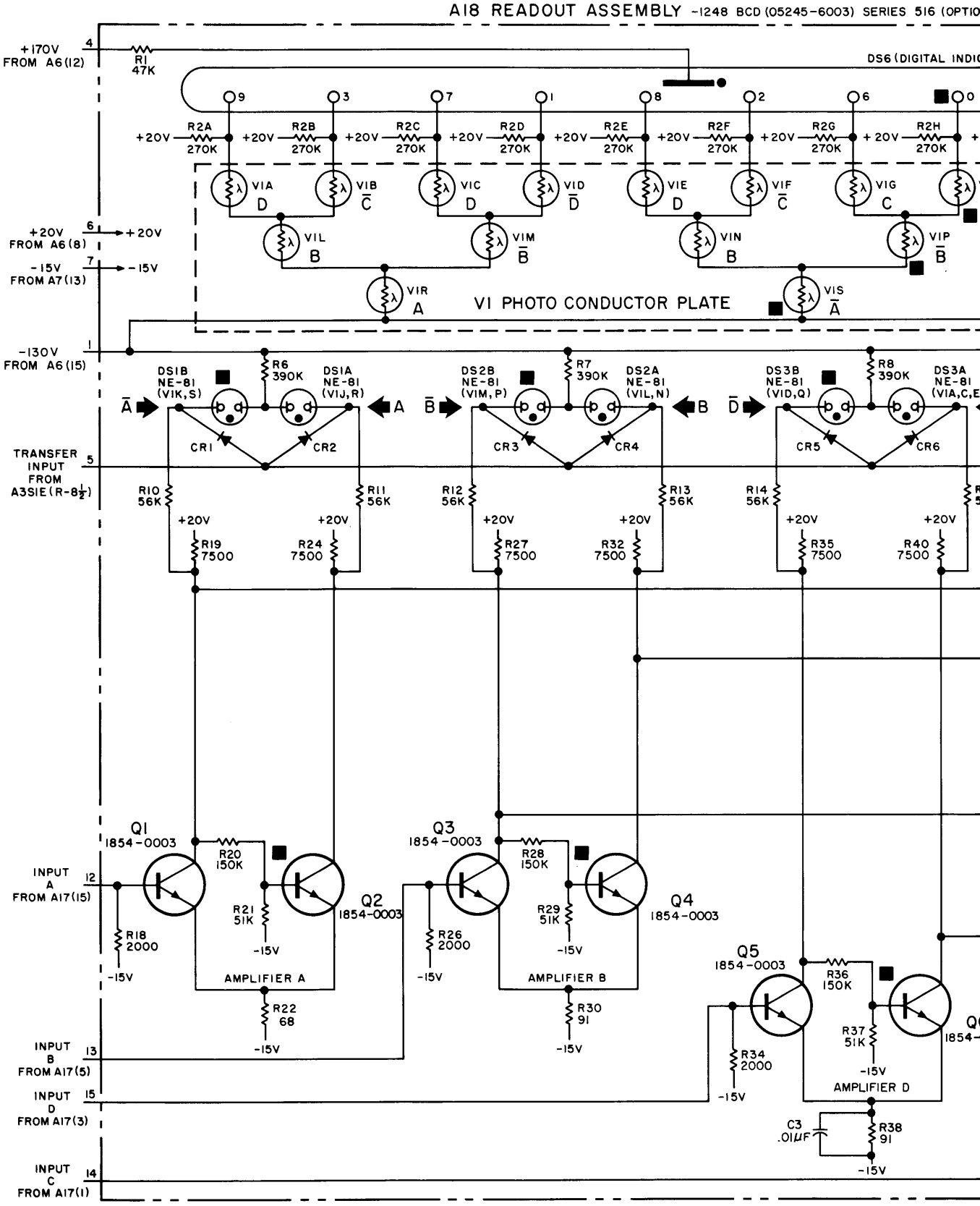
A18 READOUT ASSEMBLY -1248 BCD (05245-6003) SERIES 516 (OPTIO
DS6 (DIGITAL INDIC
+170V FROM A6(12)
4
R1 47K
9
3
7
1
8
2
6
0
+20V
R2A 270K
R2B 270K
R2C 270K
R2D 270K
R2E 270K
R2F 270K
R2G 270K
R2H 270K
VIA D
VIB C
VIC D
VID D
VIE D
VIF C
VIG C
+20V FROM A6(8)
6
+20V
-15V FROM A7(13)
7
-15V
VIL B
VIM B
VIN B
VIP B
VIR A
VI PHOTO CONDUCTOR PLATE
VIS A
-130V FROM A6(15)
1
DS1B NE-81 (VIK,S)
R6 390K
DS1A NE-81 (VIJ,R)
DS2B NE-81 (VIM,P)
R7 390K
DS2A NE-81 (VIL,N)
DS3B NE-81 (VID,Q)
R8 390K
DS3A NE-81 (VIA,C,E
CR1
CR2
CR3
CR4
CR5
CR6
TRANSFER INPUT FROM A3S1E(R-8½)
5
R10 56K
R11 56K
R12 56K
R13 56K
R14 56K
R19 7500
R24 7500
R27 7500
R32 7500
R35 7500
R40 7500
Q1 1854-0003
R20 150K
R21 51K
Q2 1854-0003
Q3 1854-0003
R28 150K
R29 51K
Q4 1854-0003
INPUT A FROM A17(15)
12
R18 2000
AMPLIFIER A
R22 68
R26 2000
AMPLIFIER B
R30 91
Q5 1854-0003
R36 150K
R37 51K
R34 2000
AMPLIFIER D
INPUT B FROM A17(5)
13
INPUT D FROM A17(3)
15
C3 .01μF
R38 91
INPUT C FROM A17(1)
14

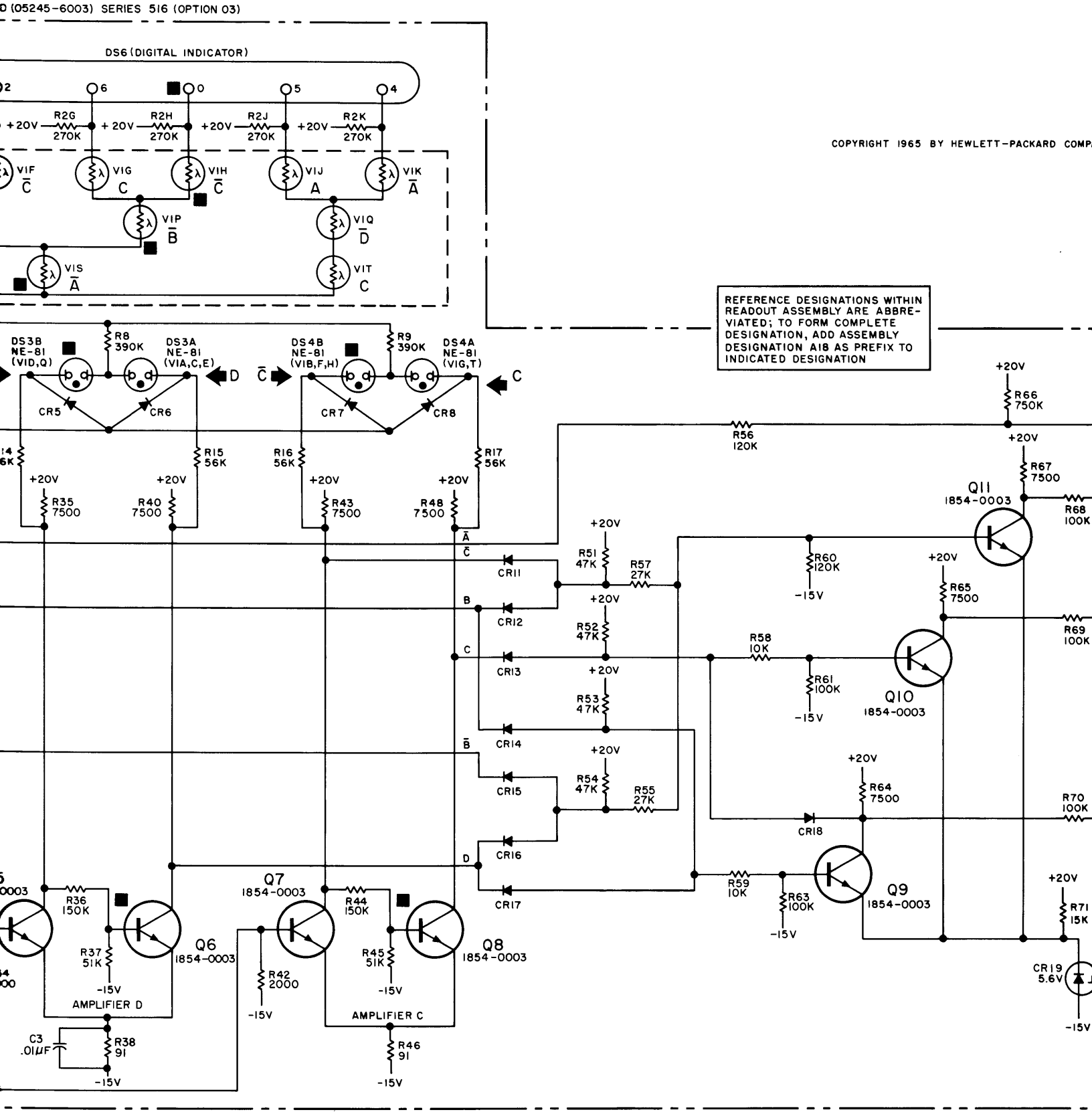

Figure 7-16. A18

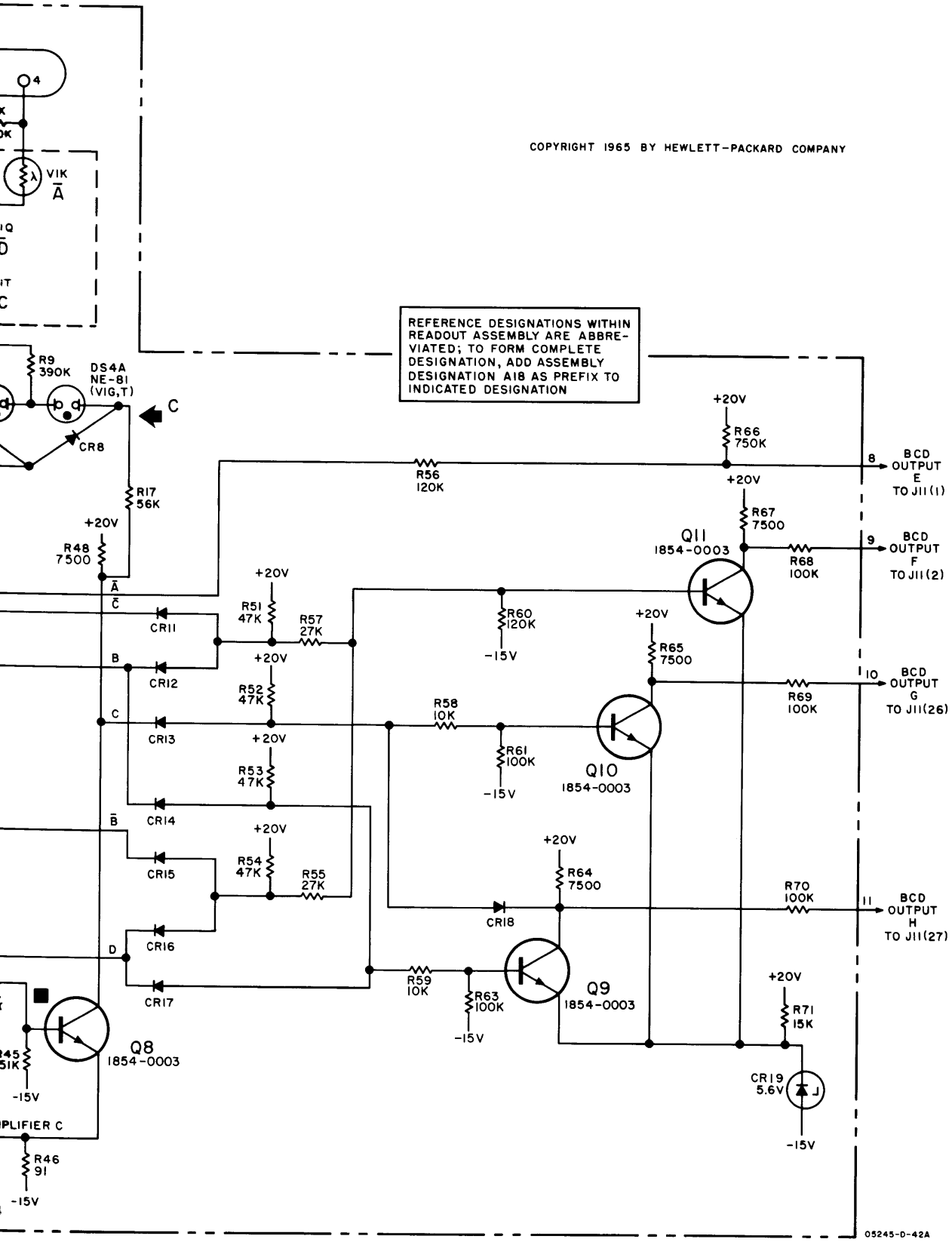

Figure 7-16. A18 Readout (05245-6003) Option 03

Figure 7-17

A19, A20 INPUT AMPL

7-33/7/34

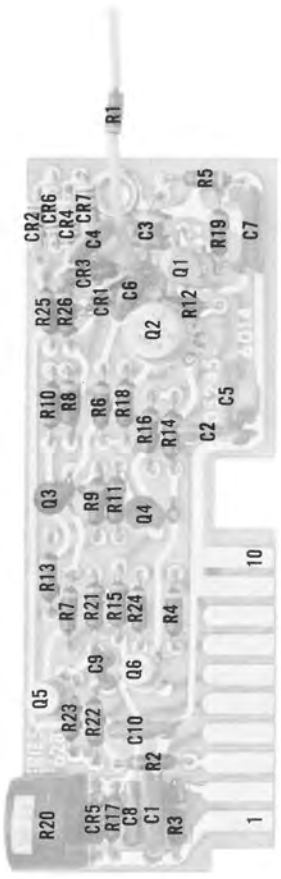
R1
CR2
CR6
CR4
CR7
R5
C4
C3
R19
C7
CR3
Q1
CR1
C6
R25
R26
R12
Q2
R10
R8
R6
R18
C5
R16
R14
C2
Q3
R9
R11
Q4
10
R13
R7
R21
R15
R24
R4
C9
Q6
Q5
R23
R22
C10
R2
R20
CR5
R17
C8
C1
R3
1

A19,A20

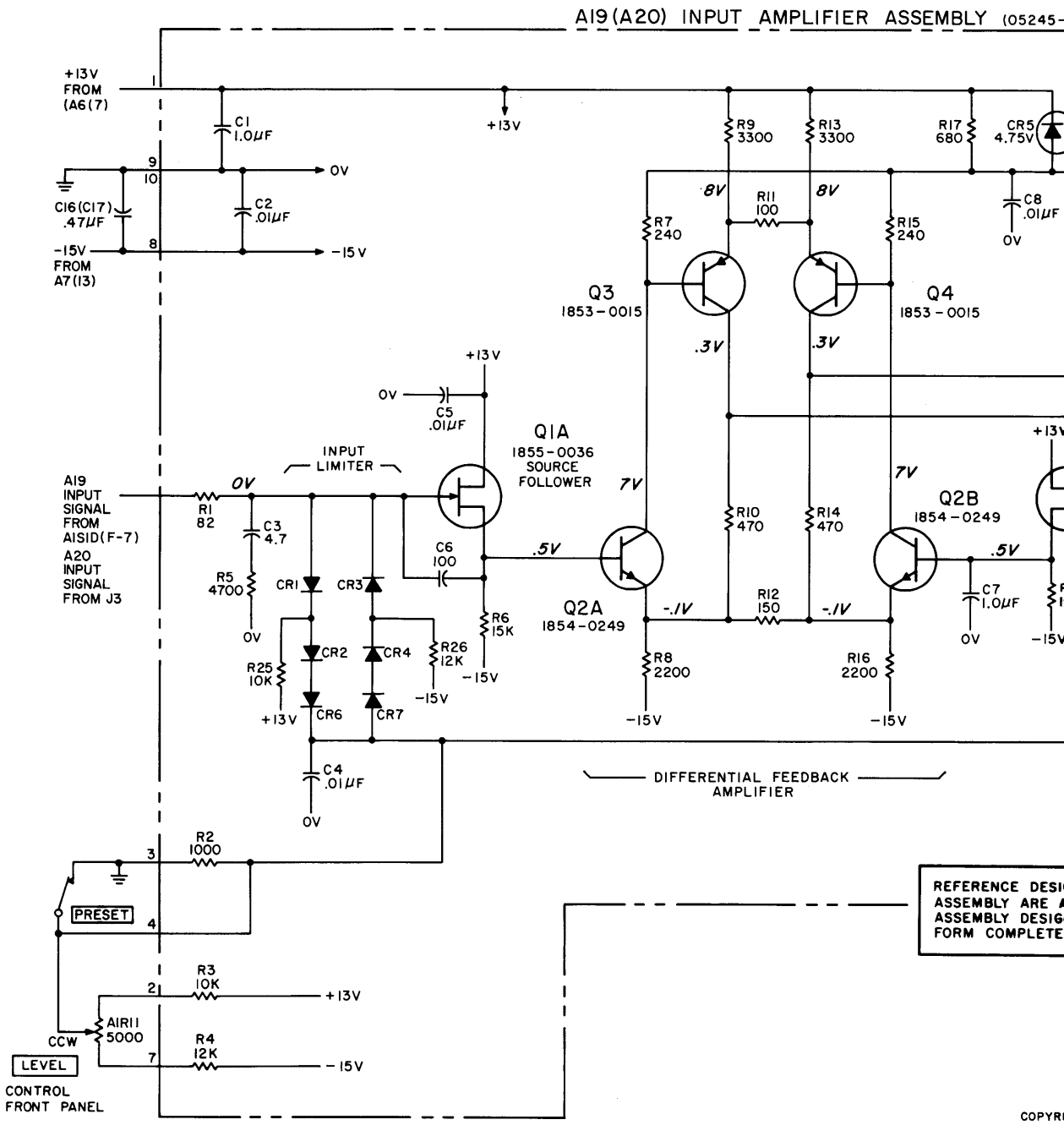
A19 (A20) INPUT AMPLIFIER ASSEMBLY (05245-
+13V FROM (A6(7)
-15V FROM A7(13)
C1 1.0μF
C2 .01μF
C16(C17) .47μF
0V
-15V
+13V
R9 3300
R13 3300
R17 680
CR5 4.75V
C8 .01μF
R11 100
R7 240
R15 240
8V
Q3 1853-0015
Q4 1853-0015
.3V
C5 .01μF
Q1A 1855-0036 SOURCE FOLLOWER
INPUT LIMITER
A19 INPUT SIGNAL FROM A1SID(F-7)
A20 INPUT SIGNAL FROM J3
R1 82
C3 4.7
R5 4700
CR1
CR3
CR2
CR4
CR6
CR7
R25 10K
R26 12K
R6 15K
C6 100
.5V
7V
Q2A 1854-0249
Q2B 1854-0249
R10 470
R14 470
R12 150
-.1V
R8 2200
R16 2200
C7 1.0μF
C4 .01μF
DIFFERENTIAL FEEDBACK AMPLIFIER
R2 1000
PRESET
R3 10K
R4 12K
A1R11 5000
CCW
LEVEL
CONTROL FRONT PANEL
REFERENCE DESI
ASSEMBLY ARE A
ASSEMBLY DESIG
FORM COMPLETE
COPYRI

T AMPLIFIER ASSEMBLY (05245-6014)

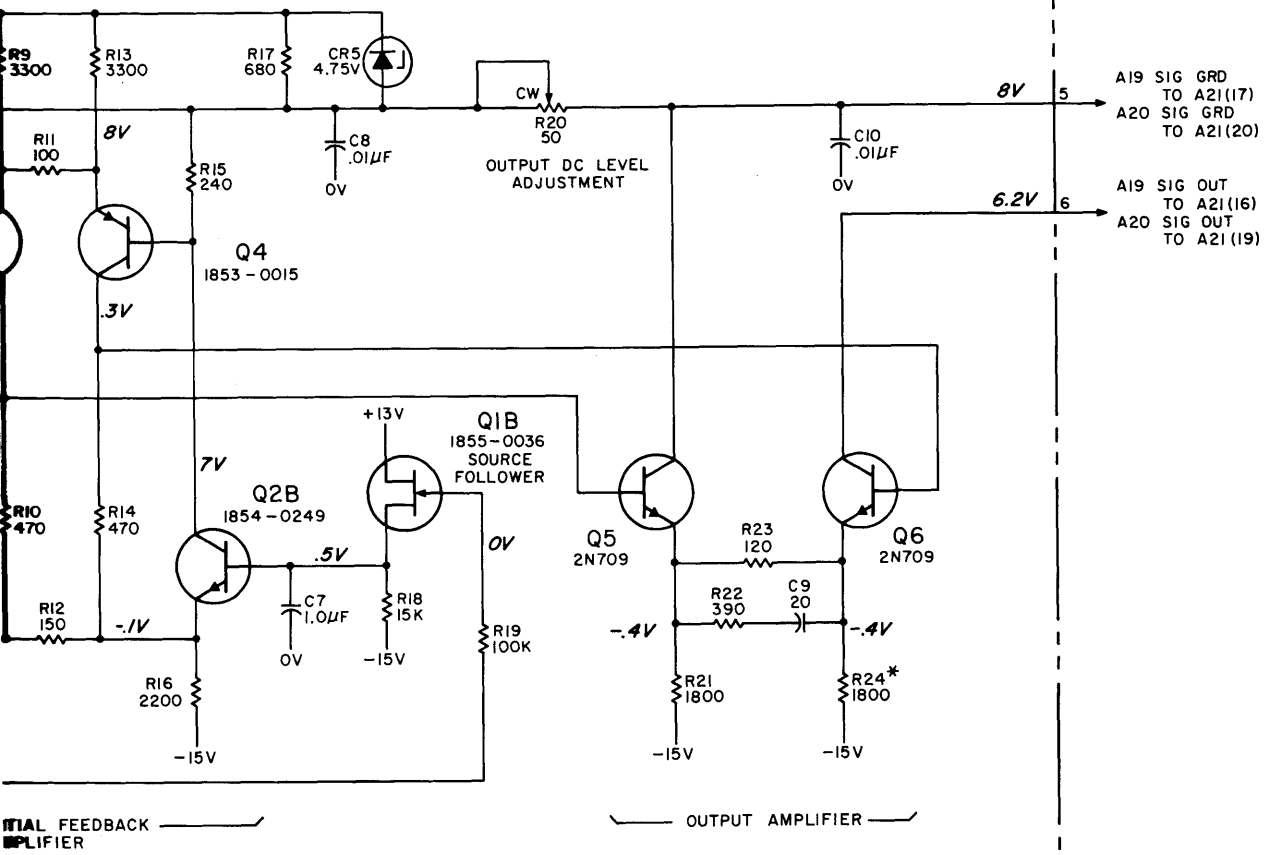

ITIAL FEEDBACK AMPLIFIER

OUTPUT AMPLIFIER

REFERENCE DESIGNATIONS WITHIN THIS ASSEMBLY ARE ABBREVIATED. ADD ASSEMBLY DESIGNATION AS PREFIX TO FORM COMPLETE DESIGNATION

NOTE

1. UNLESS OTHERWISE
   RESISTANCE IN
   CAPACITANCE IN
2. ASTERISK (*) INDI
   COMPONENT, AVER
3. DC VOLTAGES WIT
   LEVEL—PRESET
   TIME BASE—EXT

NO PREFIX	A1	A19 (A2
C16(C17)	R11	C1 – 1 CR1 – Q1 – R1 – 2

A19 (A20) INPUT A
ASSEMBLY (0524

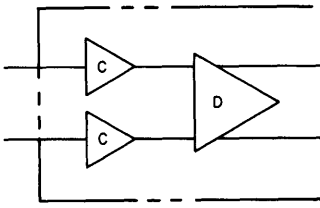

COPYRIGHT 1966 BY HEWLETT-PACKARD COMPANY

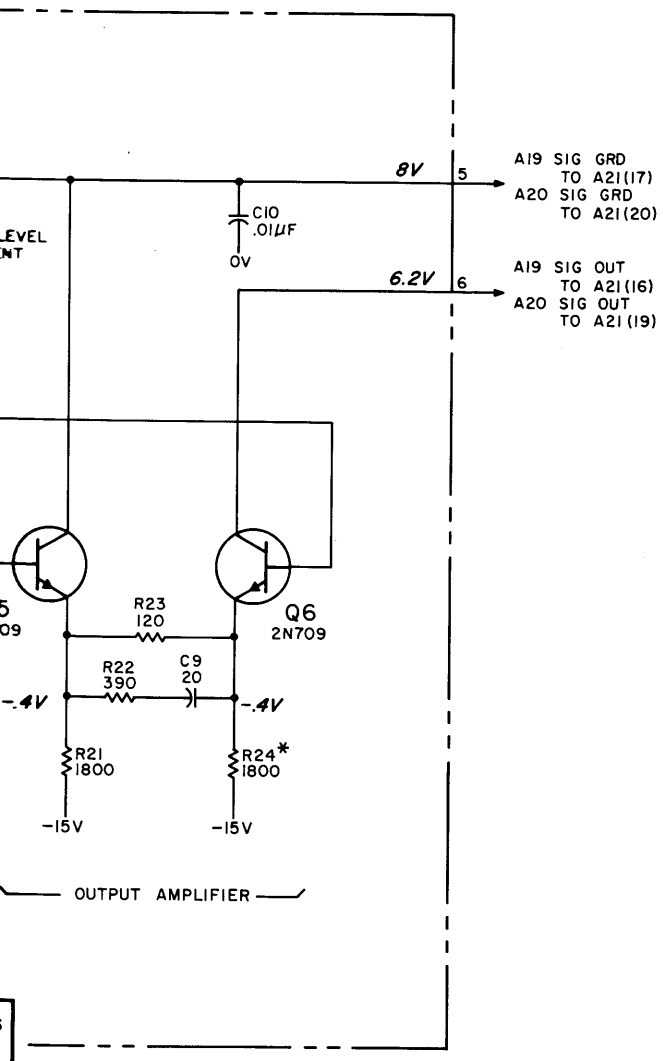

NOTES

1. UNLESS OTHERWISE INDICATED:
   RESISTANCE IN OHMS;
   CAPACITANCE IN PICOFARADS
2. ASTERISK (*) INDICATES SELECTED COMPONENT, AVERAGE VALUES SHOWN
3. DC VOLTAGES WITH:
   LEVEL—PRESET
   TIME BASE—EXT

NO PREFIX	AI	A19 (A20)
C16(C17)	RII	C1 – 10 CR1 – 7 Q1 – 6 R1 – 26

A19 (A20) INPUT AMPLIFIER ASSEMBLY (05245-6014)

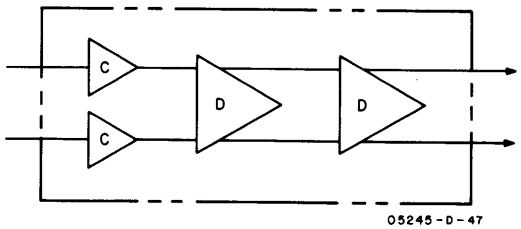

PACKARD COMPANY

Figure 7-17. A19, A20 Input Ampl

Figure 7-18

A21 FUNCTION CONTROL

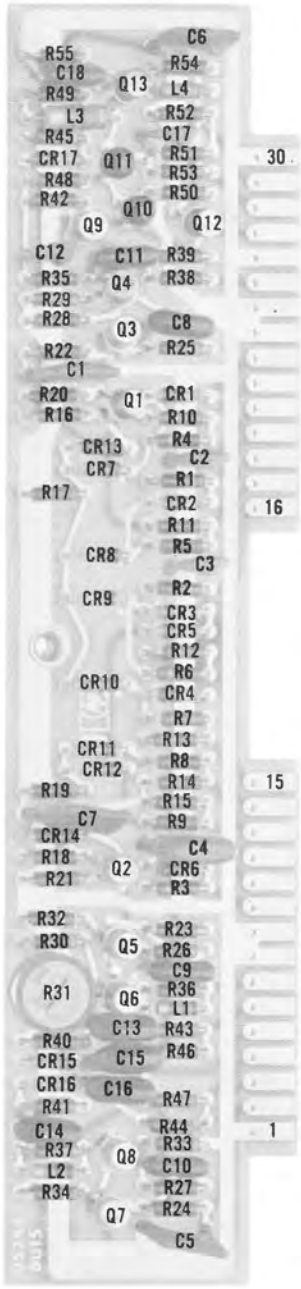
C6
R55
R54
C18
Q13
L4
R49
L3
R52
R45
C17
CR17
Q11
R51
30
R48
R53
R42
R50
Q10
Q9
Q12
C12
C11
R39
R35
Q4
R38
R29
R28
Q3
C8
R22
R25
C1
R20
Q1
CR1
R16
R10
R4
CR13
C2
CR7
R1
R17
CR2
16
R11
R5
CR8
C3
R2
CR9
CR3
CR5
R12
R6
CR10
CR4
R7
R13
CR11
R8
CR12
R14
15
R19
R15
C7
R9
CR14
C4
R18
Q2
CR6
R21
R3
R32
R23
R30
Q5
R26
C9
R31
Q6
R36
L1
C13
R43
R40
R46
CR15
C15
CR16
C16
R47
R41
C14
R44
1
R37
Q8
R33
L2
C10
R34
R27
Q7
R24
C5

A21

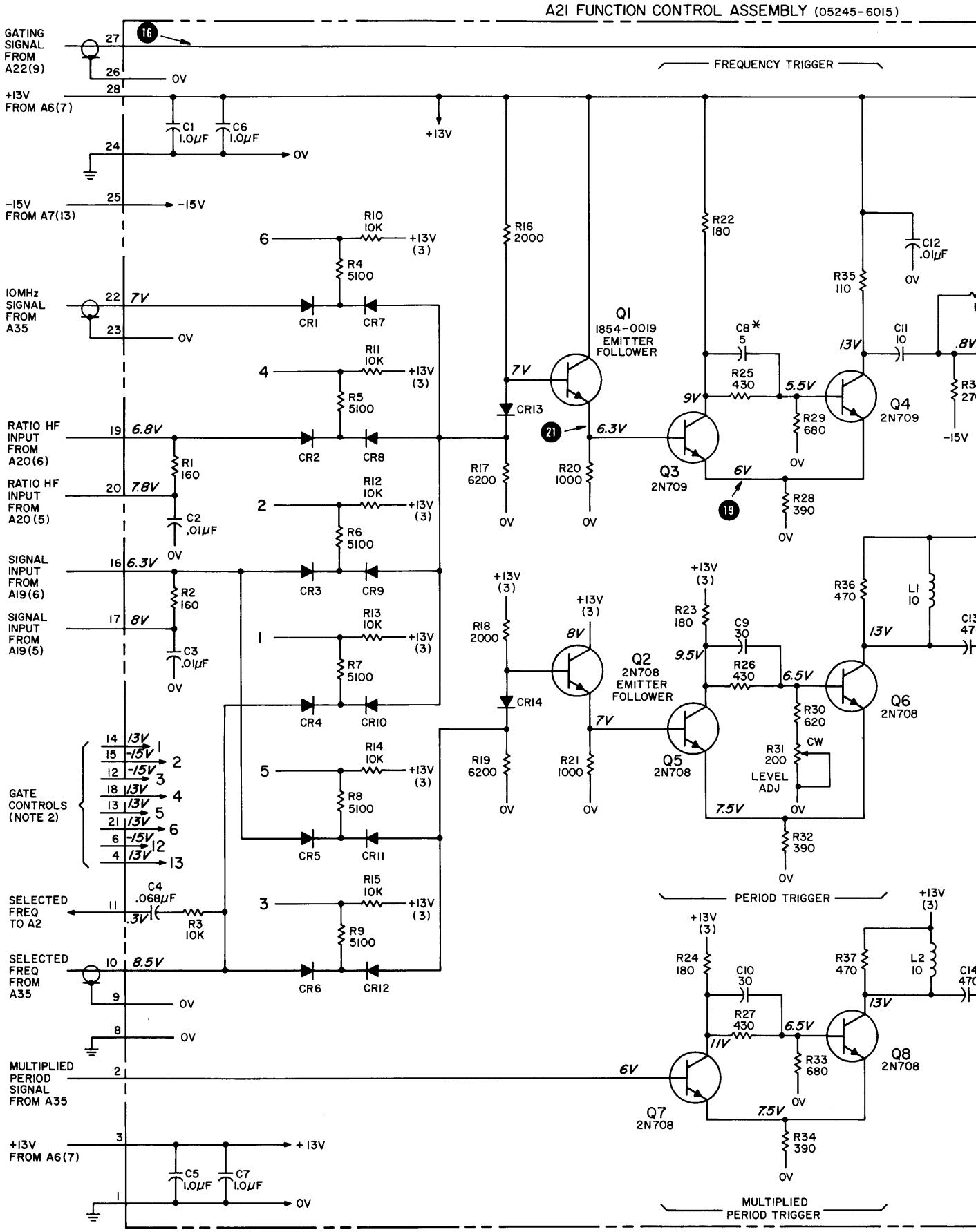
A21 FUNCTION CONTROL ASSEMBLY (05245-6015)
FREQUENCY TRIGGER
PERIOD TRIGGER
MULTIPLIED PERIOD TRIGGER
GATING SIGNAL FROM A22(9)
+13V FROM A6(7)
-15V FROM A7(13)
10MHz SIGNAL FROM A35
RATIO HF INPUT FROM A20(6)
RATIO HF INPUT FROM A20(5)
SIGNAL INPUT FROM A19(6)
SIGNAL INPUT FROM A19(5)
GATE CONTROLS (NOTE 2)
SELECTED FREQ TO A2
SELECTED FREQ FROM A35
MULTIPLIED PERIOD SIGNAL FROM A35
+13V FROM A6(7)
Q1 1854-0019 EMITTER FOLLOWER
Q2 2N708 EMITTER FOLLOWER
Q3 2N709
Q4 2N709
Q5 2N708
Q6 2N708
Q7 2N708
Q8 2N708
LEVEL ADJ
CW

BLY (05245-6015)

NOT

1. UNLESS OTHER
RESISTANC
CAPACITAN
INDUCTANC

2. SEE TABLE ON
FIG. FOR C
OF GATE CON

3. ASTERISK (*)
COMPONENT,

REFERENC

REFERENCE DESIGNATIONS WITHIN THIS ASSEMBLY ARE ABBREVIATED. ADD ASSEMBLY DESIGNATION AS PREFIX TO FORM COMPLETE DESIGNATION

TRIGGER

Q12 2N708 GATING SIGNAL AMPLIFIER

.7V

1V

0V

R52 100

R42 510

R48 510

R50 180

R51 330

+13V (28)

R54 100

L4 .47

C12 .01μF

R35 110

0V

17

Q10 2N3640

4.5V

4V

R39 510

Q9 2N709 AMPLIFIER

Q11 2N3640

4V

.3V

R53 750

C17 .01μF

13V

C11 10

.8V

MAIN GATE

20

+13V (28)

0V

15

29

GATED SIGNAL TO A17(13)

5.5V

Q4 2N709

R29 680

R38 2700

-15V

Q13 1854-0019 PULSE AMPLIFIER

R45 6800

R49 240

L3 .27

+13V (28)

CR17

R55 68

C18 20

R28 390

7

PERIOD SIGNAL TO A35

13V

R46 47K

12

+13V (3)

R36 470

L1 10

R43 4700

13V

C13 470

CR15

-.6V

5

GATE TRIGGER TO A22 (8)

-7.5V

C15 410

6.5V

Q6 2N708

R40 4700

R30 620

CW

R32 390

TRIGGER

+13V (3)

R47 47K

13

+13V (3)

R37 470

L2 10

R44 4700

C14 470

CR16

13V

13V

C16 470

6.5V

Q8 2N708

R41 4700

R33 680

R34 390

PLIED TRIGGER

A21 FUNCTION CONTROL ASSEMBLY (05245-6015)

SIGNAL INPUT FROM A19(6)

GATE CONTROLS (NOTE 2)

1
2
3
4
5
6
12
13

RATIO HF INPUT FROM A20(6)

10MHz SIGNAL FROM A35

GATING SIGNAL FROM A22(9)

SELECTED FREQ TO A2

SELECTED FREQ FROM A35

MULTIPLIED PERIOD SIGNAL FROM A35

2
1
4
6
5
3

C

TRIGGER

E

MAIN GATE

E

B

C

TRIGGER

12

13

TRIGGER

05245-D-

COPYRIGHT 1966 BY HEWLETT-PACKARD COMPANY

Figure

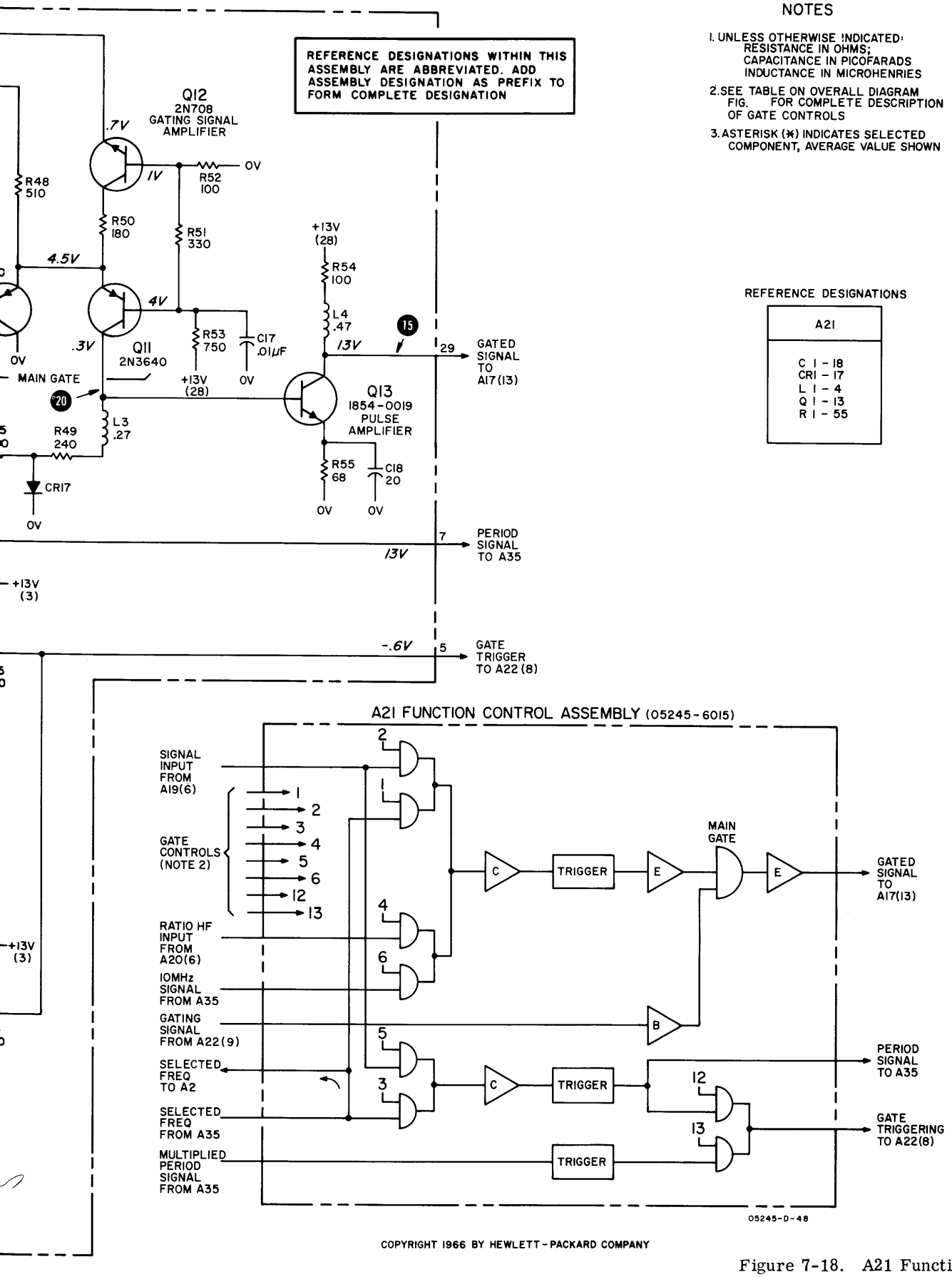

COPYRIGHT 1966 BY HEWLETT-PACKARD COMPANY

Figure 7-18. A21 Function Control

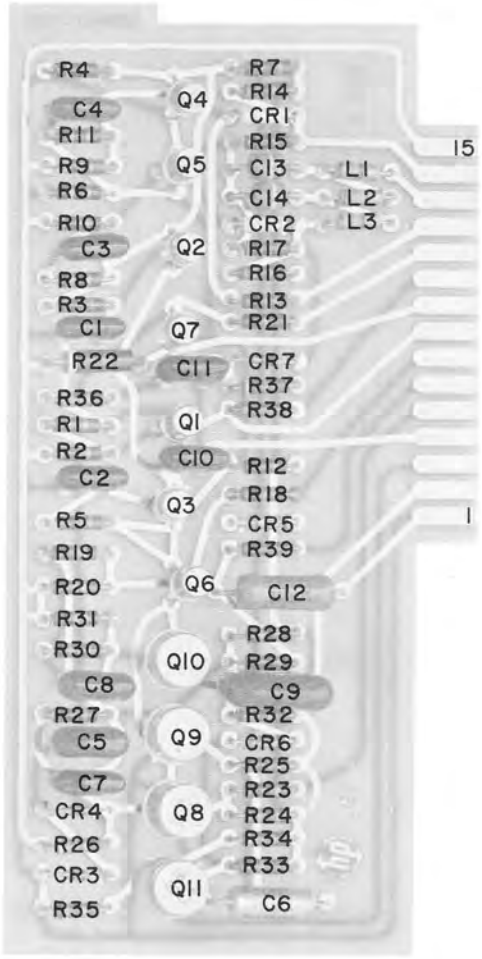
R4
C4
R11
R9
R6
R10
C3
R8
R3
C1
R22
R36
R1
R2
C2
R5
R19
R20
R31
R30
C8
R27
C5
C7
CR4
R26
CR3
R35
Q4
Q5
Q2
Q7
C11
Q1
C10
Q3
Q6
Q10
Q9
Q8
Q11
R7
R14
CR1
R15
C13
C14
CR2
R17
R16
R13
R21
CR7
R37
R38
R12
R18
CR5
R39
C12
R28
R29
C9
R32
CR6
R25
R23
R24
R34
R33
C6
L1
L2
L3
15
1

A22

Figure 7-19

A22 GATE CONTROL

WAVEFORM CHART

INPUT SWITCH: CHECK
TIME BASE SWITCH: 10MS GATE
FUNCTION SWITCH: FREQUENCY
SAMPLE RATE CONTROL: MINIMUM (CCW)
OSCILLOSCOPE SYNC: COLLECTOR A22Q5
OSCILLOSCOPE TRIG: POS SLOPE EXT
OSCILLOSCOPE SWEEP: 20 MS/CM

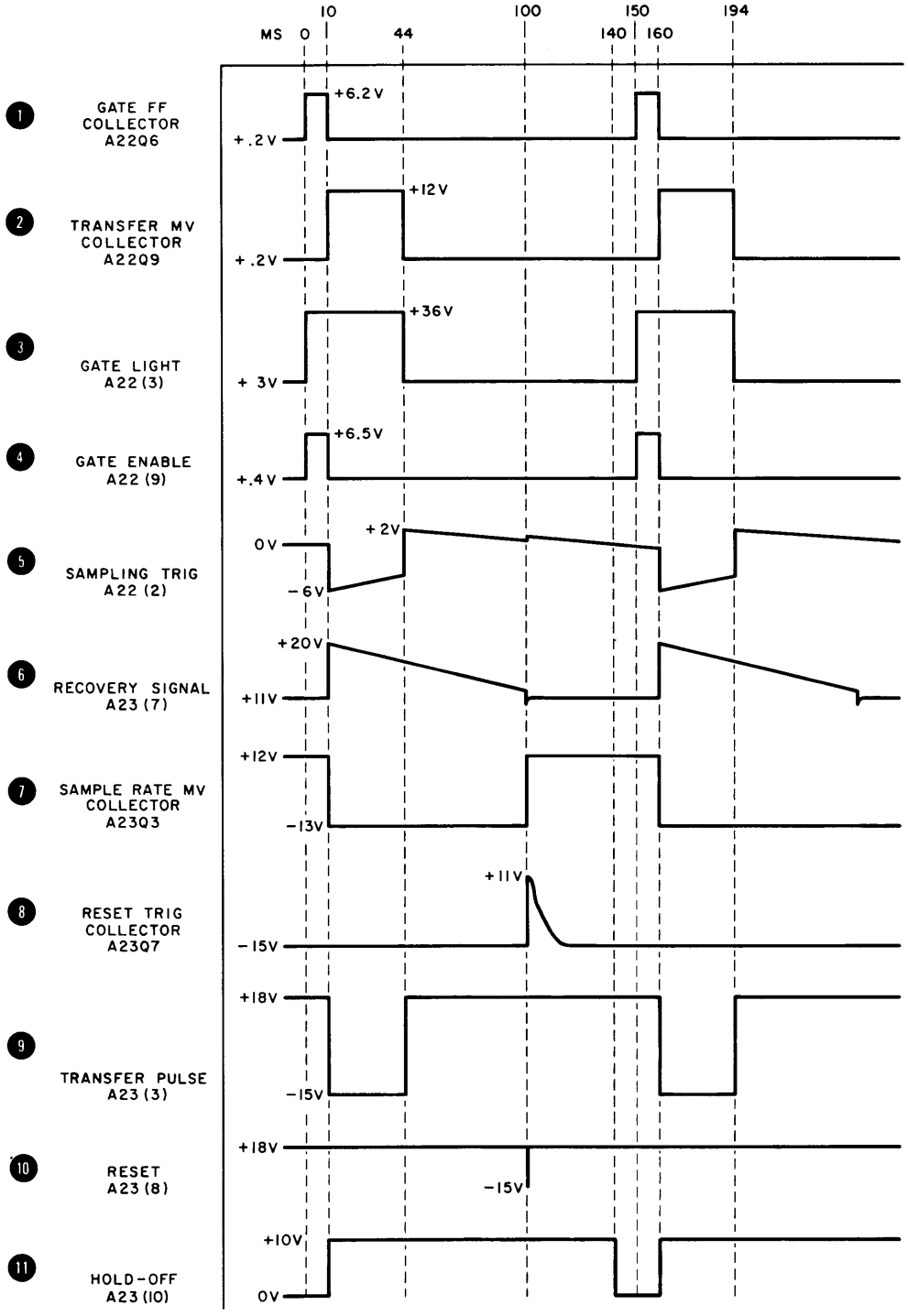

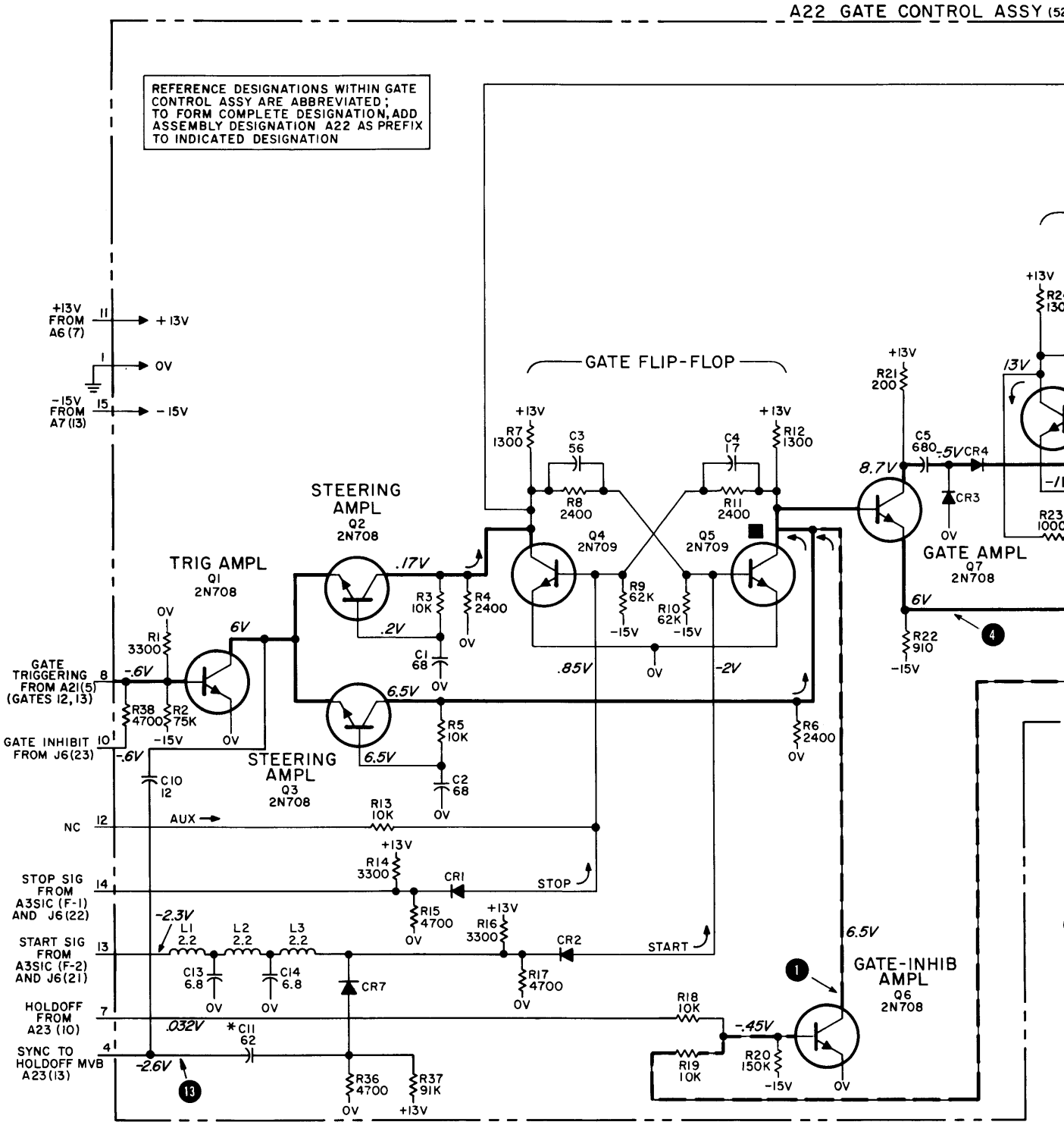
A22 GATE CONTROL ASSY
REFERENCE DESIGNATIONS WITHIN GATE CONTROL ASSY ARE ABBREVIATED; TO FORM COMPLETE DESIGNATION, ADD ASSEMBLY DESIGNATION A22 AS PREFIX TO INDICATED DESIGNATION
+13V FROM A6 (7)
-15V FROM A7 (13)
GATE FLIP-FLOP
STEERING AMPL Q2 2N708
TRIG AMPL Q1 2N708
STEERING AMPL Q3 2N708
GATE AMPL Q7 2N708
GATE-INHIB AMPL Q6 2N708
GATE TRIGGERING FROM A21(5) (GATES 12, 13)
GATE INHIBIT FROM J6(23)
NC
STOP SIG FROM A3SIC (F-1) AND J6(22)
START SIG FROM A3SIC (F-2) AND J6(21)
HOLDOFF FROM A23 (10)
SYNC TO HOLDOFF MVB A23(13)
AUX
STOP
START

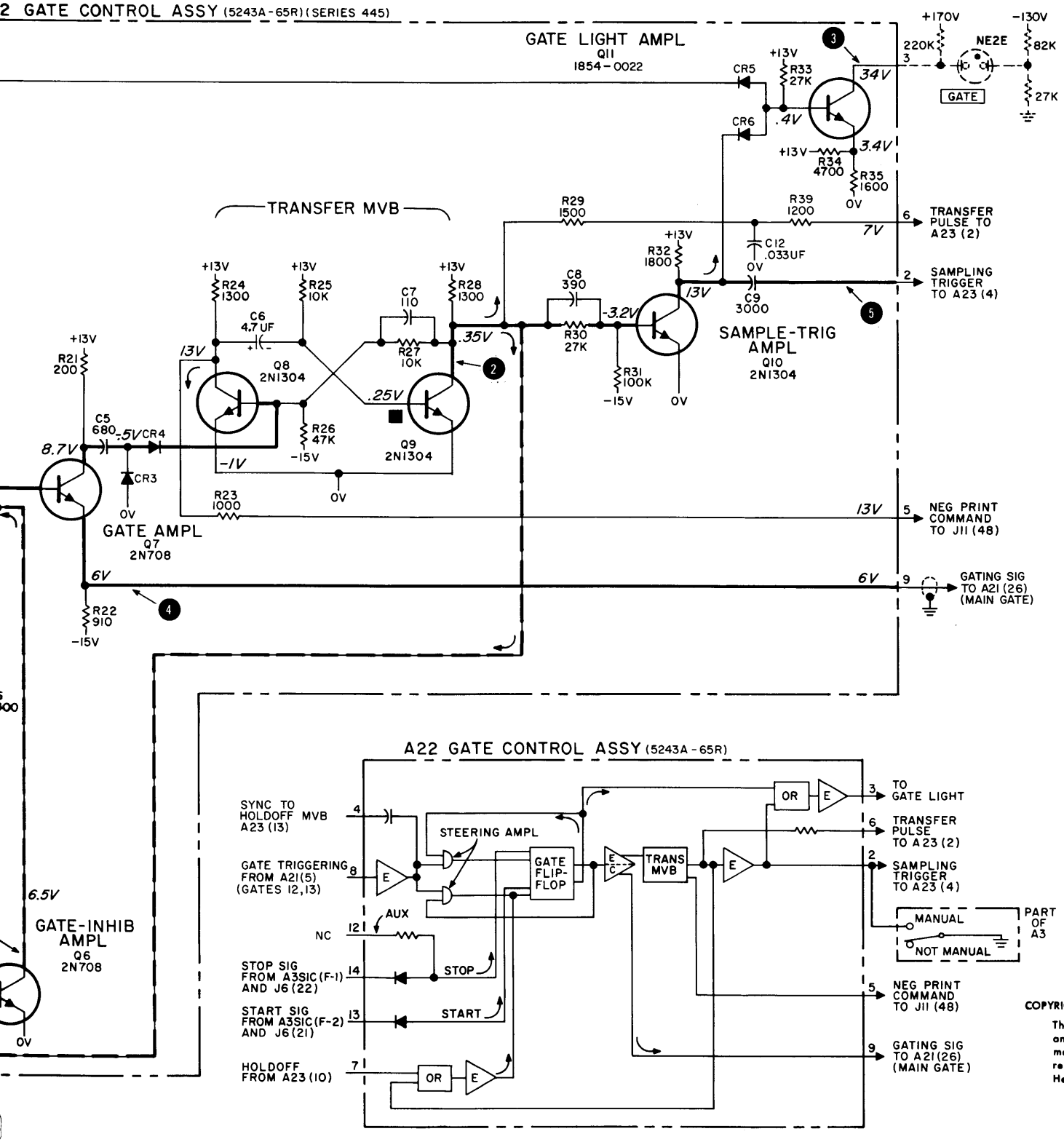

1. UNLESS OTH
RESISTAN
CAPACITA
INDUCTA
2. FILLED SQU
CONDUCTING
AND HOLDOF
TRIGGERING
3. ASTERISK (*)
COMPONENT
4. DC VOLTAGES
SENSITIVI
TIME BAS
FUNCTION

COPYRIGHT 1965 BY HEWLET
This drawing is intended
and maintenance of Hew
ment and is not to be
reproduced without writt
Hewlett-Packard Compan

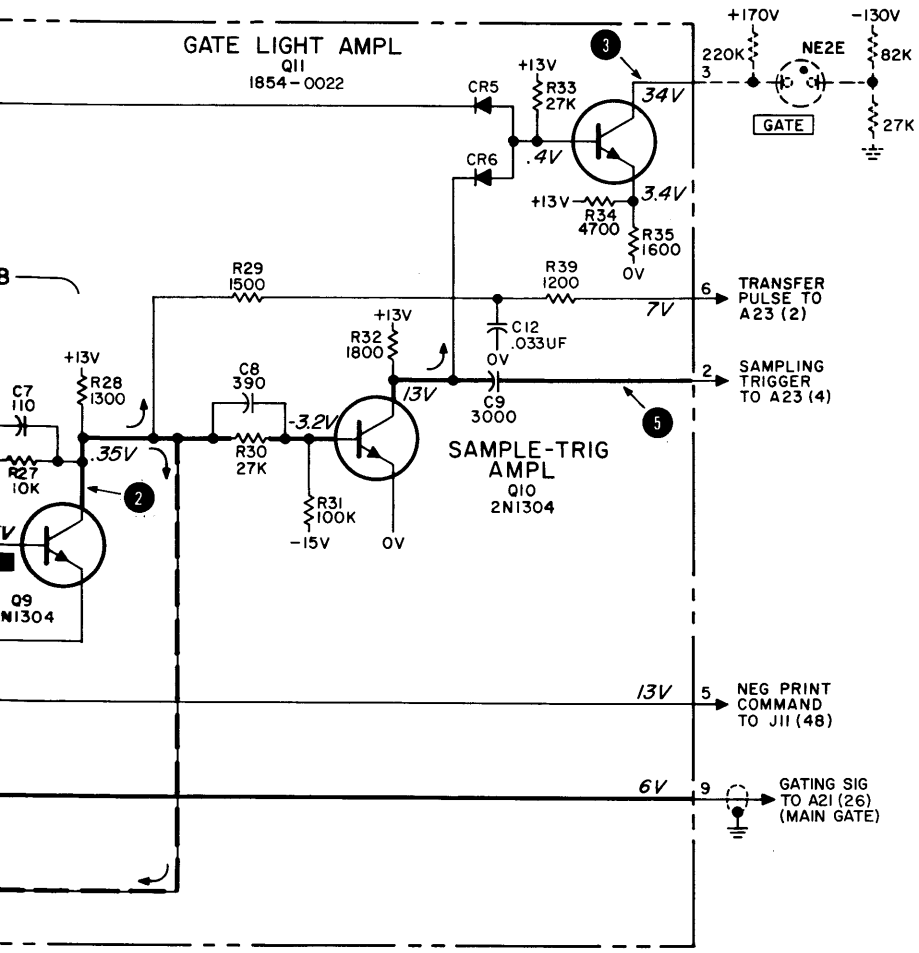

NOTES

1. UNLESS OTHERWISE INDICATED:
   RESISTANCE IN OHMS
   CAPACITANCE IN PICOFARADS
   INDUCTANCE IN MICROHENRIES
2. FILLED SQUARE (■) INDICATES CONDUCTING ELEMENT AFTER RESET AND HOLDOFF BUT BEFORE GATE TRIGGERING
3. ASTERISK (*) INDICATES SELECTED COMPONENT
4. DC VOLTAGES WITH:
   SENSITIVITY — CHECK
   TIME BASE — 10MS
   FUNCTION — MANUAL START

REFERENCE DESIGNATIONS

C1	- 14
CR1	- 7
L1	- 3
Q1	- 11
R1	- 39

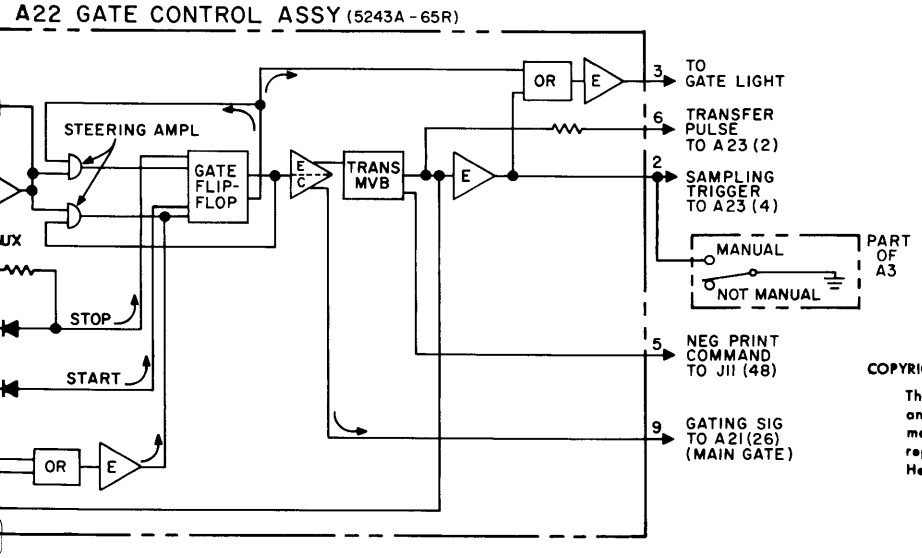

COPYRIGHT 1965 BY HEWLETT-PACKARD COMPANY

This drawing is intended for the operation and maintenance of Hewlett-Packard equipment and is not to be used otherwise or reproduced without written consent of the Hewlett-Packard Company.

05245-D-28ABCD

Figure 7-19. A22 Gate Control

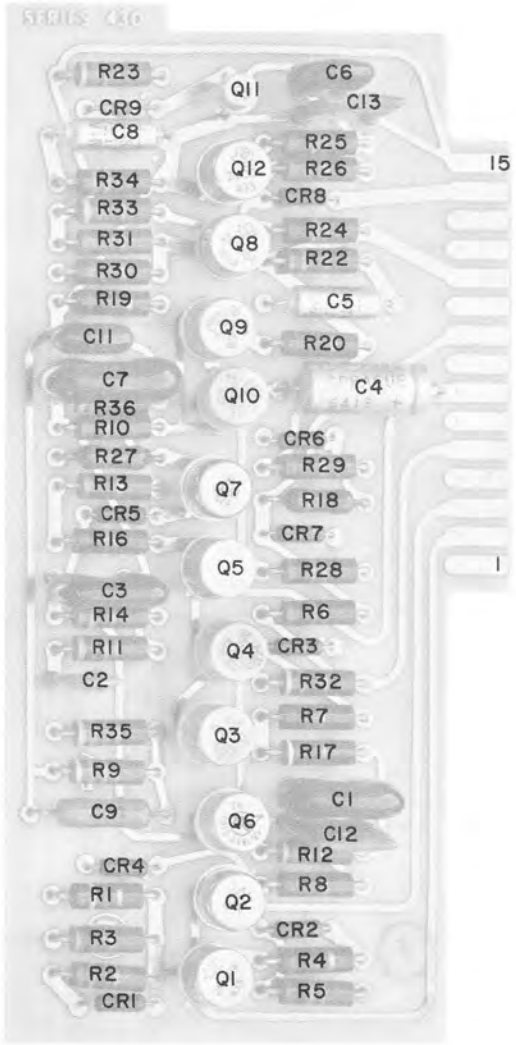
R23
CR9
C8
R34
R33
R31
R30
R19
C11
C7
R36
R10
R27
R13
CR5
R16
C3
R14
R11
C2
R35
R9
C9
CR4
R1
R3
R2
CR1
Q11
Q12
Q8
Q9
Q10
Q7
Q5
Q4
Q3
Q6
Q2
Q1
C6
C13
R25
R26
CR8
R24
R22
C5
R20
C4
CR6
R29
R18
CR7
R28
R6
CR3
R32
R7
R17
C1
C12
R12
R8
CR2
R4
R5
15
1

A23

Figure 7-20

A23 SAMPLING CONTROL

WAVEFORM CHART

INPUT SWITCH: CHECK
TIME BASE SWITCH: 10MS GATE
FUNCTION SWITCH: FREQUENCY
SAMPLE RATE CONTROL: MINIMUM (CCW)
OSCILLOSCOPE SYNC: COLLECTOR A22Q5
OSCILLOSCOPE TRIG: POS SLOPE EXT
OSCILLOSCOPE SWEEP: 20 MS/CM

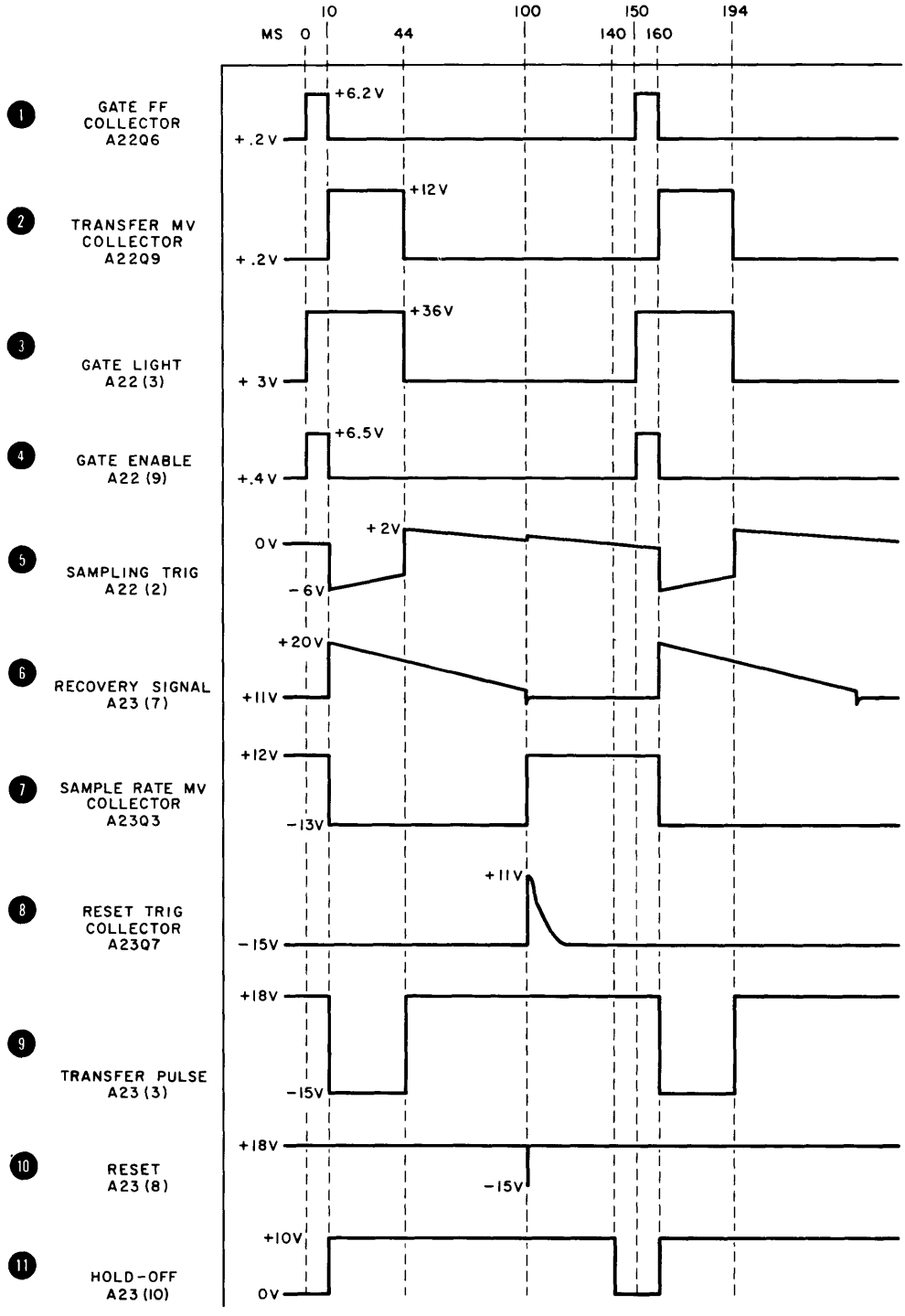

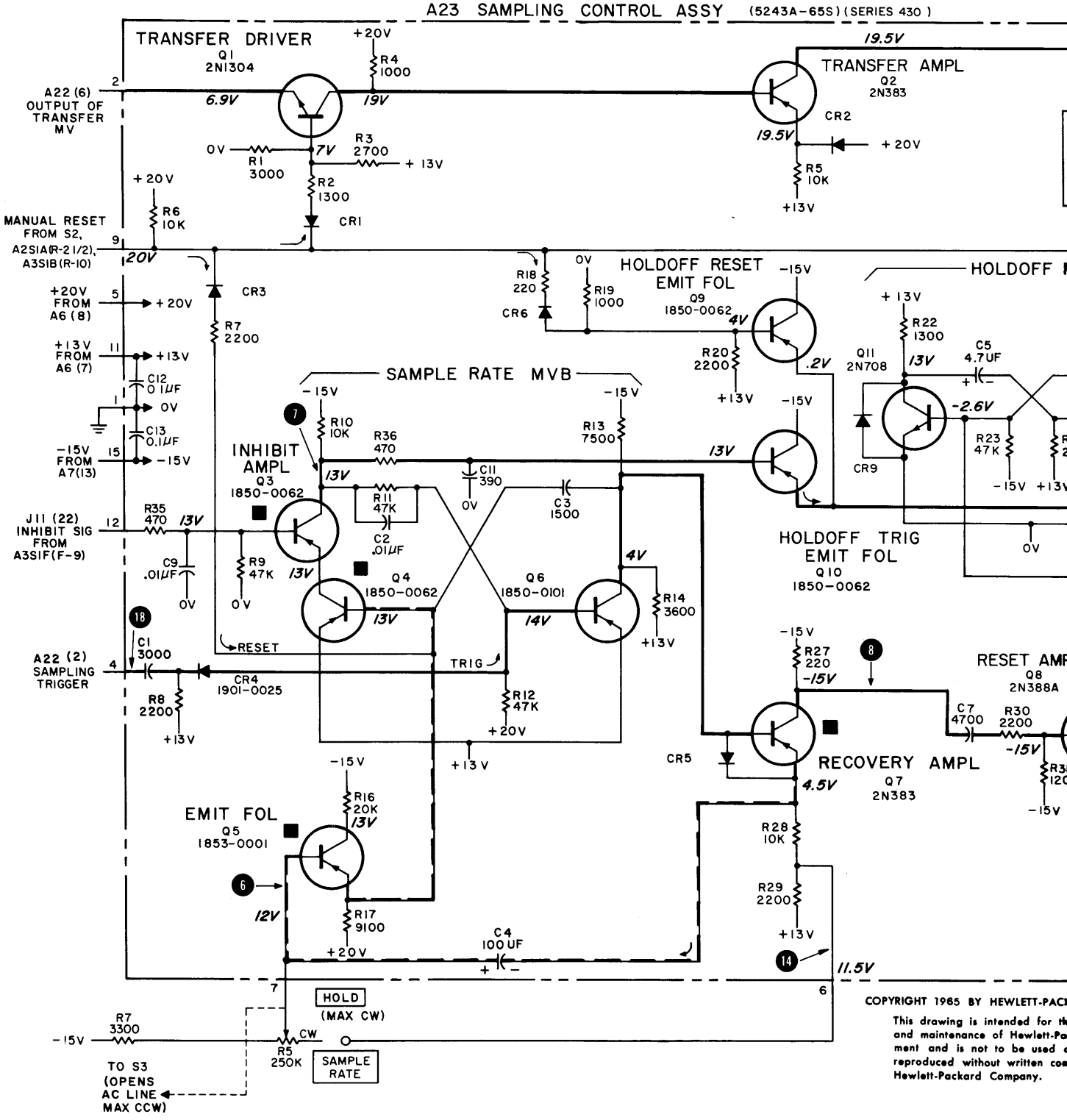
A23 SAMPLING CONTROL ASSY (5243A-65S) (SERIES 430)
TRANSFER DRIVER
Q1 2N1304
+20V
R4 1000
A22 (6) OUTPUT OF TRANSFER MV
6.9V
19V
0V
R1 3000
7V
R3 2700
+13V
R2 1300
CR1
TRANSFER AMPL
Q2 2N383
19.5V
CR2
+20V
R5 10K
+13V
+20V
R6 10K
MANUAL RESET FROM S2, A2S1A(R-21/2), A3S1B(R-10)
20V
CR3
R7 2200
+20V FROM A6 (8)
+13V FROM A6 (7)
C12 0.1μF
C13 0.1μF
-15V FROM A7(13)
R18 220
CR6
R19 1000
HOLDOFF RESET EMIT FOL
Q9 1850-0062
4V
R20 2200
.2V
HOLDOFF
R22 1300
Q11 2N708
13V
C5 4.7UF
-2.6V
CR9
R23 47K
SAMPLE RATE MVB
R10 10K
R36 470
INHIBIT AMPL
Q3 1850-0062
13V
R11 47K
C2 .01μF
C11 390
R13 7500
C3 1500
J11 (22) INHIBIT SIG FROM A3S1F(F-9)
R35 470
C9 .01μF
R9 47K
Q4 1850-0062
Q6 1850-0101
14V
4V
R14 3600
HOLDOFF TRIG EMIT FOL
Q10 1850-0062
A22 (2) SAMPLING TRIGGER
C1 3000
CR4 1901-0025
RESET
TRIG
R8 2200
R12 47K
+20V
+13V
R27 220
-15V
RESET AMP
Q8 2N388A
C7 4700
R30 2200
RECOVERY AMPL
Q7 2N383
4.5V
CR5
EMIT FOL
Q5 1853-0001
R16 20K
12V
R17 9100
R28 10K
R29 2200
C4 100 UF
11.5V
HOLD (MAX CW)
R7 3300
R5 250K
CW
SAMPLE RATE
TO S3 (OPENS AC LINE MAX CCW)
COPYRIGHT 1965 BY HEWLETT-PACK
This drawing is intended for th
and maintenance of Hewlett-Pa
ment and is not to be used
reproduced without written co
Hewlett-Packard Company.

A-65S) (SERIES 430)

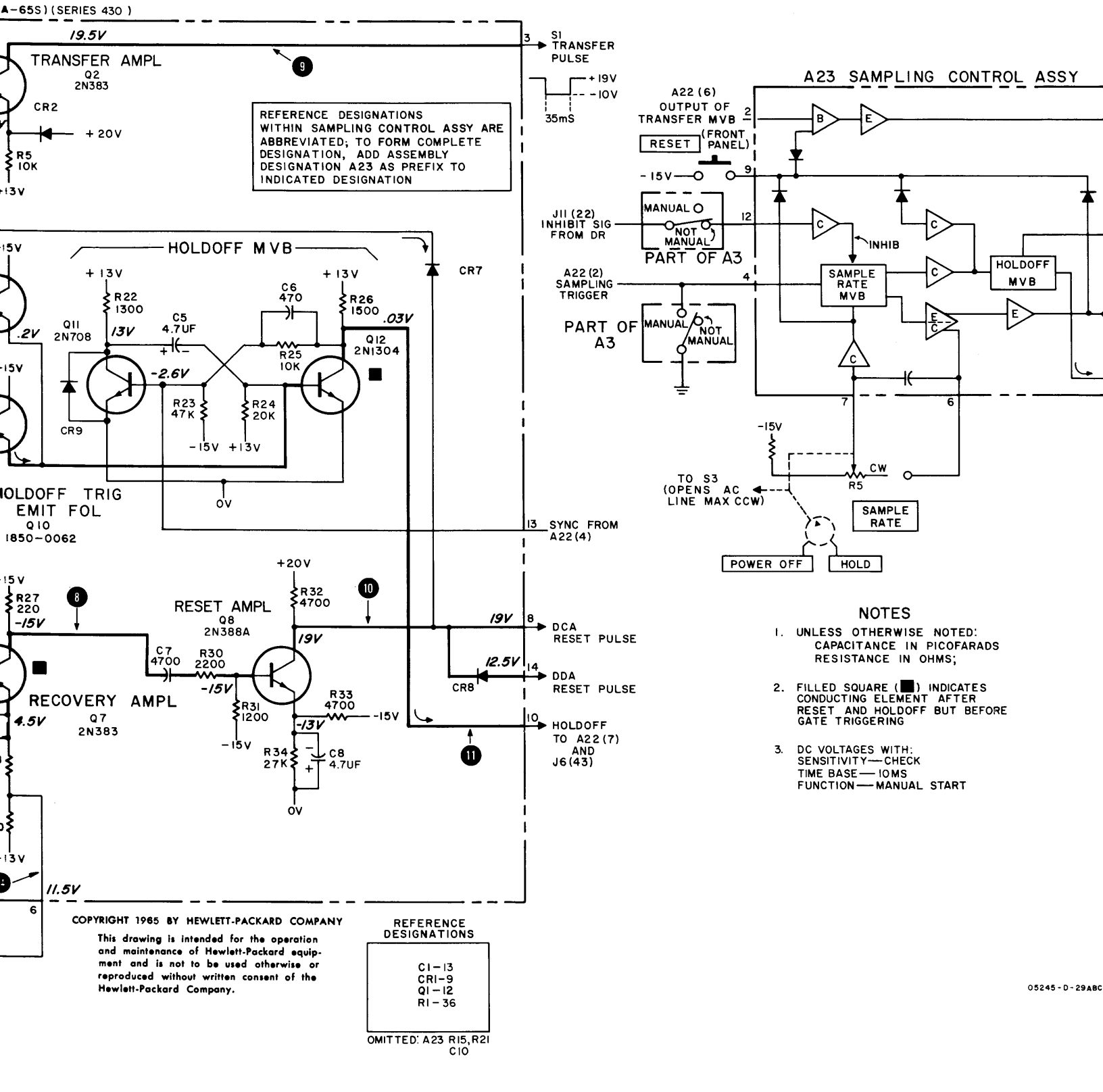

NOTES

1. UNLESS OTHERWISE NOTED:
   CAPACITANCE IN PICOFARADS
   RESISTANCE IN OHMS;
2. FILLED SQUARE (■) INDICATES CONDUCTING ELEMENT AFTER RESET AND HOLDOFF BUT BEFORE GATE TRIGGERING
3. DC VOLTAGES WITH:
   SENSITIVITY — CHECK
   TIME BASE — 10MS
   FUNCTION — MANUAL START

COPYRIGHT 1965 BY HEWLETT-PACKARD COMPANY

This drawing is intended for the operation and maintenance of Hewlett-Packard equipment and is not to be used otherwise or reproduced without written consent of the Hewlett-Packard Company.

REFERENCE DESIGNATIONS

C1-13
CR1-9
Q1-12
R1-36

OMITTED: A23 R15, R21
C10

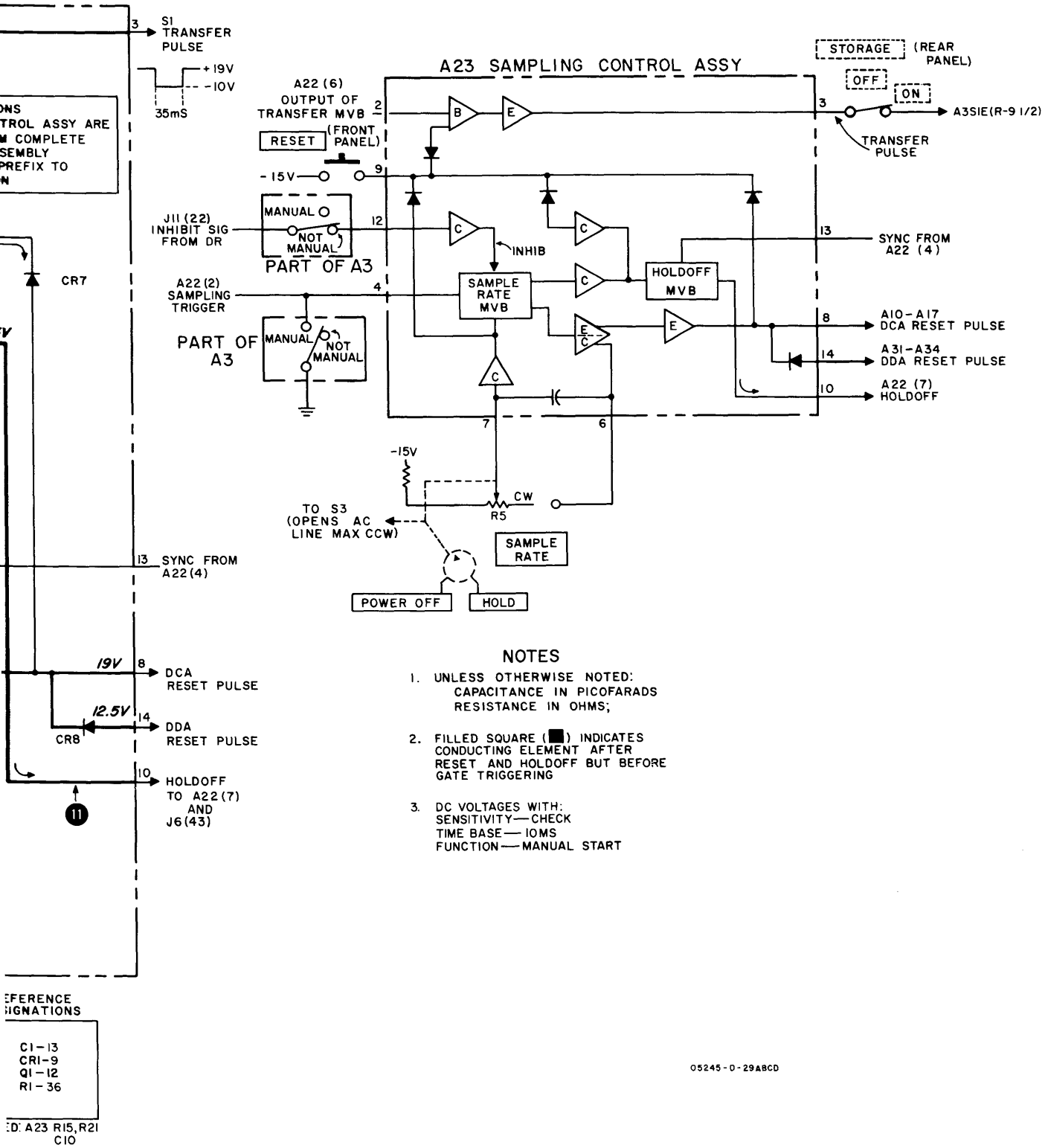

NOTES

1. UNLESS OTHERWISE NOTED:
   CAPACITANCE IN PICOFARADS
   RESISTANCE IN OHMS;
2. FILLED SQUARE (■) INDICATES CONDUCTING ELEMENT AFTER RESET AND HOLDOFF BUT BEFORE GATE TRIGGERING
3. DC VOLTAGES WITH:
   SENSITIVITY—CHECK
   TIME BASE—10MS
   FUNCTION—MANUAL START

Figure 7-20. A23 Sampling Control

Figure 7-21

A24, A25, A26 CRYSTAL OVEN, OVEN CONTROL, OSCILLATOR

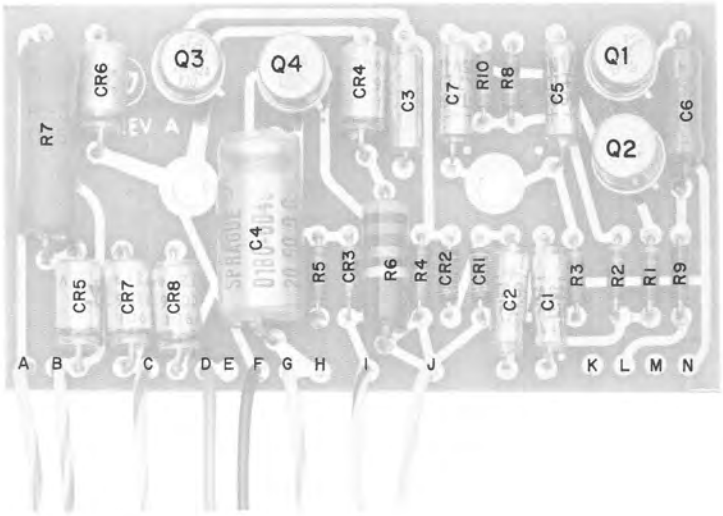
Q3
Q4
Q1
Q2
CR6
CR4
C3
C7
R10
R8
C5
C6
R7
REV A
C4
R5
CR3
R6
R4
CR2
CR1
C2
C1
R3
R2
R1
R9
CR5
CR7
CR8
A B C D E F G H I J K L M N

A25

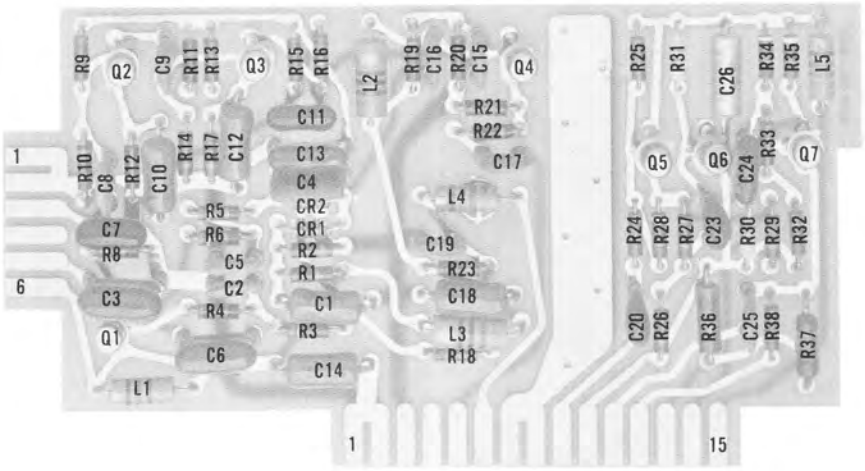
R9 Q2 C9 R11 R13 Q3 R15 R16 L2 R19 C16 R20 C15 Q4 R25 R31 C26 R34 R35 L5
C11 R21 R22 C17 Q5 Q6 C24 R33 Q7
1 R10 C8 R12 C10 R14 R17 C12 C13 C4 CR2 CR1 R2 R1 L4 C19 R23 C18 L3 R18
R5 R6 C5 C2 R4 C1 R3 C6 C14 L1
C7 R8 C3 Q1
6
R24 R28 R27 C23 R30 R29 R32
C20 R26 R36 C25 R38 R37
1
15

A26

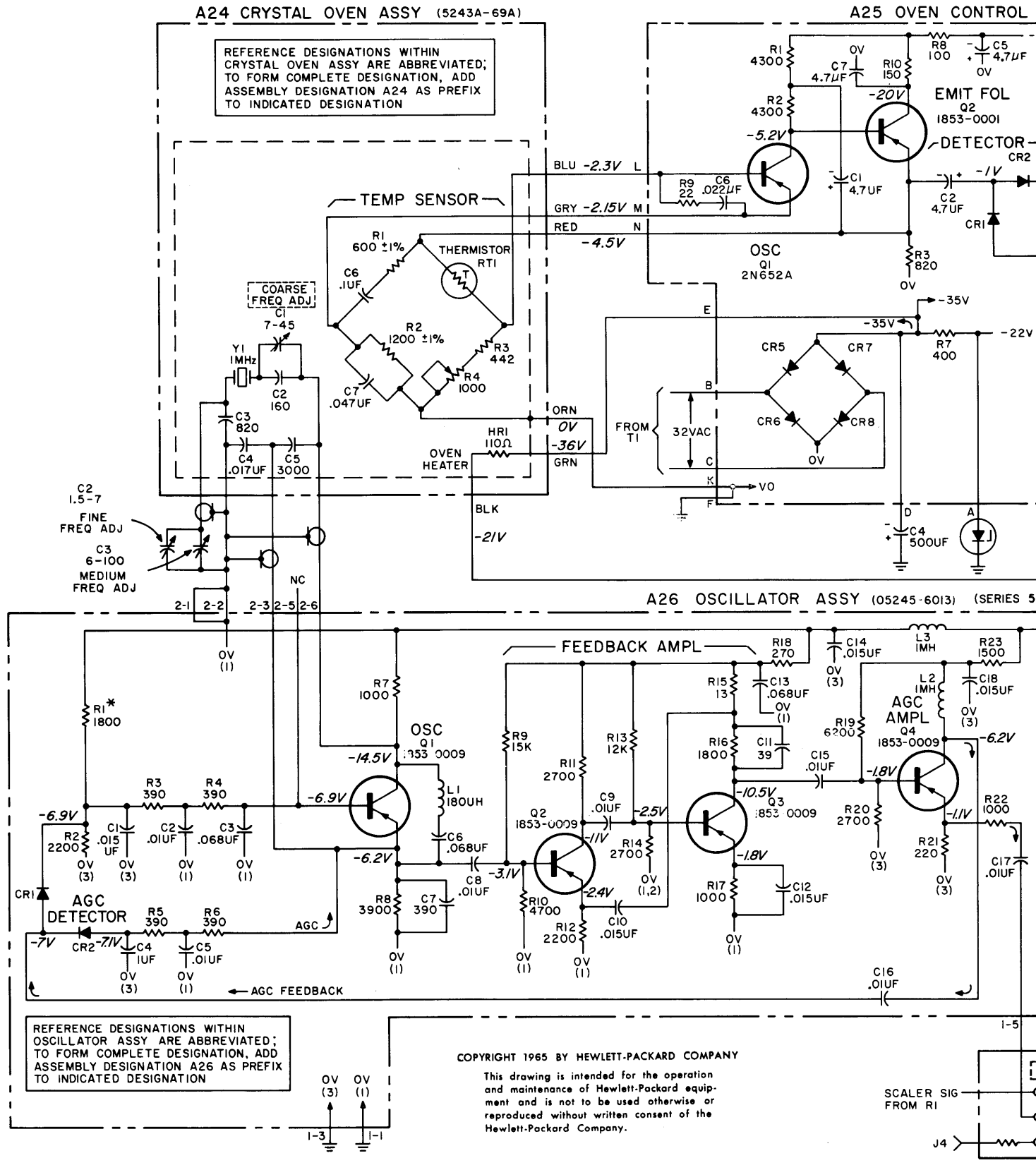

COPYRIGHT 1965 BY HEWLETT-PACKARD COMPANY

This drawing is intended for the operation and maintenance of Hewlett-Packard equipment and is not to be used otherwise or reproduced without written consent of the Hewlett-Packard Company.

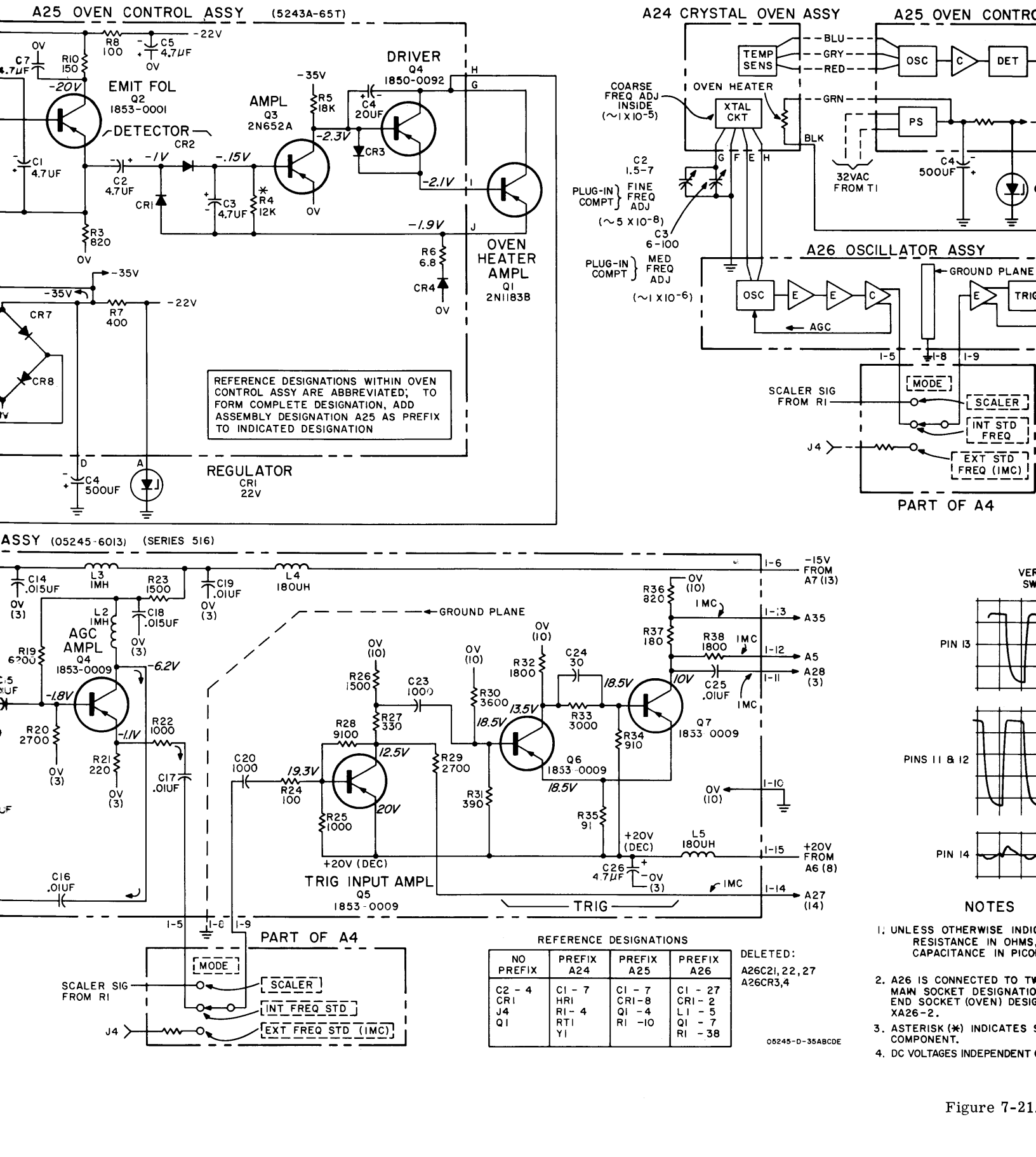
A25 OVEN CONTROL ASSY (5243A-65T)
EMIT FOL Q2 1853-0001
DETECTOR
AMPL Q3 2N652A
DRIVER Q4 1850-0092
OVEN HEATER AMPL Q1 2N1183B
REGULATOR CR1 22V
REFERENCE DESIGNATIONS WITHIN OVEN CONTROL ASSY ARE ABBREVIATED; TO FORM COMPLETE DESIGNATION, ADD ASSEMBLY DESIGNATION A25 AS PREFIX TO INDICATED DESIGNATION
A24 CRYSTAL OVEN ASSY
A25 OVEN CONTRO
TEMP SENS
OVEN HEATER
XTAL CKT
COARSE FREQ ADJ INSIDE
FINE FREQ ADJ
MED FREQ ADJ
OSC
PS
32VAC FROM T1
A26 OSCILLATOR ASSY
GROUND PLANE
AGC
SCALER SIG FROM R1
MODE
SCALER
INT STD FREQ
EXT STD FREQ (IMC)
PART OF A4
ASSY (05245-6013) (SERIES 516)
AGC AMPL Q4 1853-0009
TRIG INPUT AMPL Q5 1853-0009
Q6 1853-0009
Q7 1853 0009
-15V FROM A7 (13)
+20V FROM A6 (8)
A35
A5
A28 (3)
A27 (14)
TRIG
PART OF A4
SCALER SIG FROM R1
MODE
SCALER
INT FREQ STD
EXT FREQ STD (IMC)
J4
REFERENCE DESIGNATIONS
NO PREFIX
PREFIX A24
PREFIX A25
PREFIX A26
C2 - 4
CR1
J4
Q1
C1 - 7
HR1
R1 - 4
RT1
Y1
C1 - 7
CR1-8
Q1 -4
R1 -10
C1 - 27
CR1 - 2
L1 - 5
Q1 - 7
R1 - 38
DELETED:
A26C21, 22, 27
A26CR3,4
05245-D-35ABCDE
PIN 13
PINS 11 & 12
PIN 14
NOTES
1. UNLESS OTHERWISE INDIC
RESISTANCE IN OHMS,
CAPACITANCE IN PICO
2. A26 IS CONNECTED TO TW
MAIN SOCKET DESIGNATIO
END SOCKET (OVEN) DESIG
XA26-2.
3. ASTERISK (*) INDICATES S
COMPONENT.
4. DC VOLTAGES INDEPENDENT

Figure 7-21.

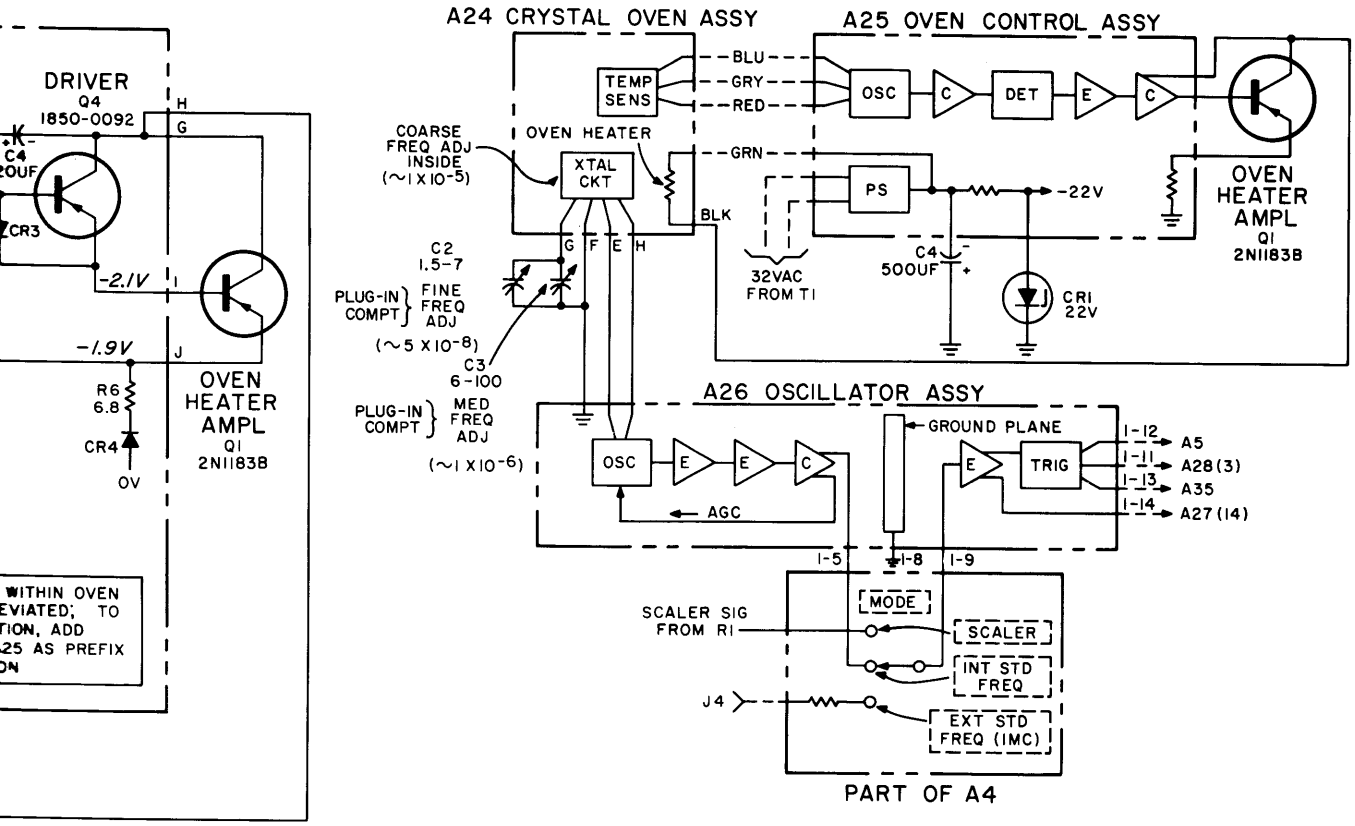

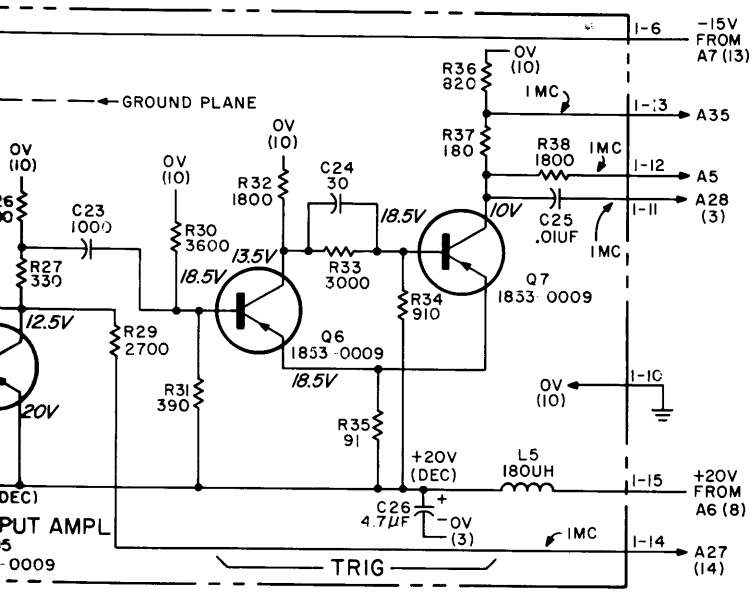

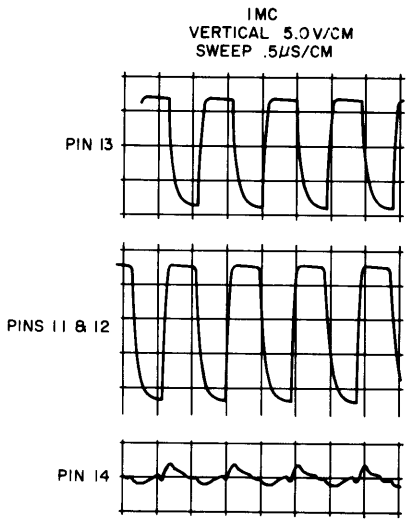

REFERENCE DESIGNATIONS

NO PREFIX	PREFIX A24	PREFIX A25	PREFIX A26
C2 - 4	C1 - 7	C1 - 7	C1 - 27
CR1	HR1	CR1-8	CR1 - 2
J4	R1 - 4	Q1 -4	L1 - 5
Q1	RT1	R1 -10	Q1 - 7
	Y1		R1 -38

DELETED:
A26C21, 22, 27
A26CR3,4

05245-D-35ABCDE

NOTES

1. UNLESS OTHERWISE INDICATED:
   RESISTANCE IN OHMS,
   CAPACITANCE IN PICOFARADS,
2. A26 IS CONNECTED TO TWO SOCKETS;
   MAIN SOCKET DESIGNATION IS XA26-1,
   END SOCKET (OVEN) DESIGNATION IS
   XA26-2.
3. ASTERISK (*) INDICATES SELECTED
   COMPONENT.
4. DC VOLTAGES INDEPENDENT OF FUNCTION.

Figure 7-21. A24, A25, A26 Crystal Oven, Oven Control, Oscillator

Figure 7-22

A27 MULTIPLIER

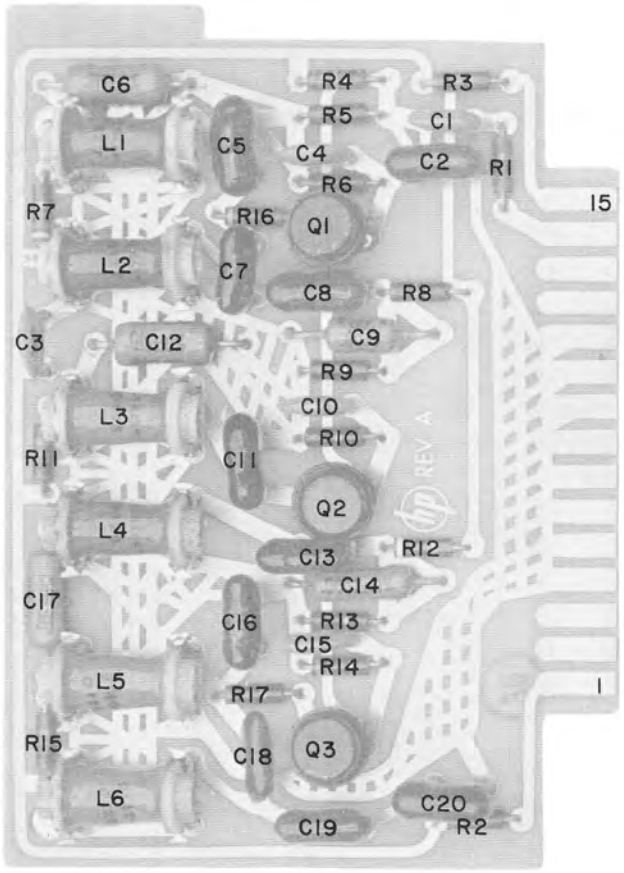
C6
R4
R3
R5
C1
L1
C5
C4
C2
R1
R6
R7
R16
Q1
15
L2
C7
C8
R8
C3
C12
C9
R9
C10
L3
R10
R11
C11
REV A
Q2
L4
C13
R12
C14
C17
C16
R13
C15
R14
L5
R17
1
R15
C18
Q3
L6
C20
C19
R2

A27

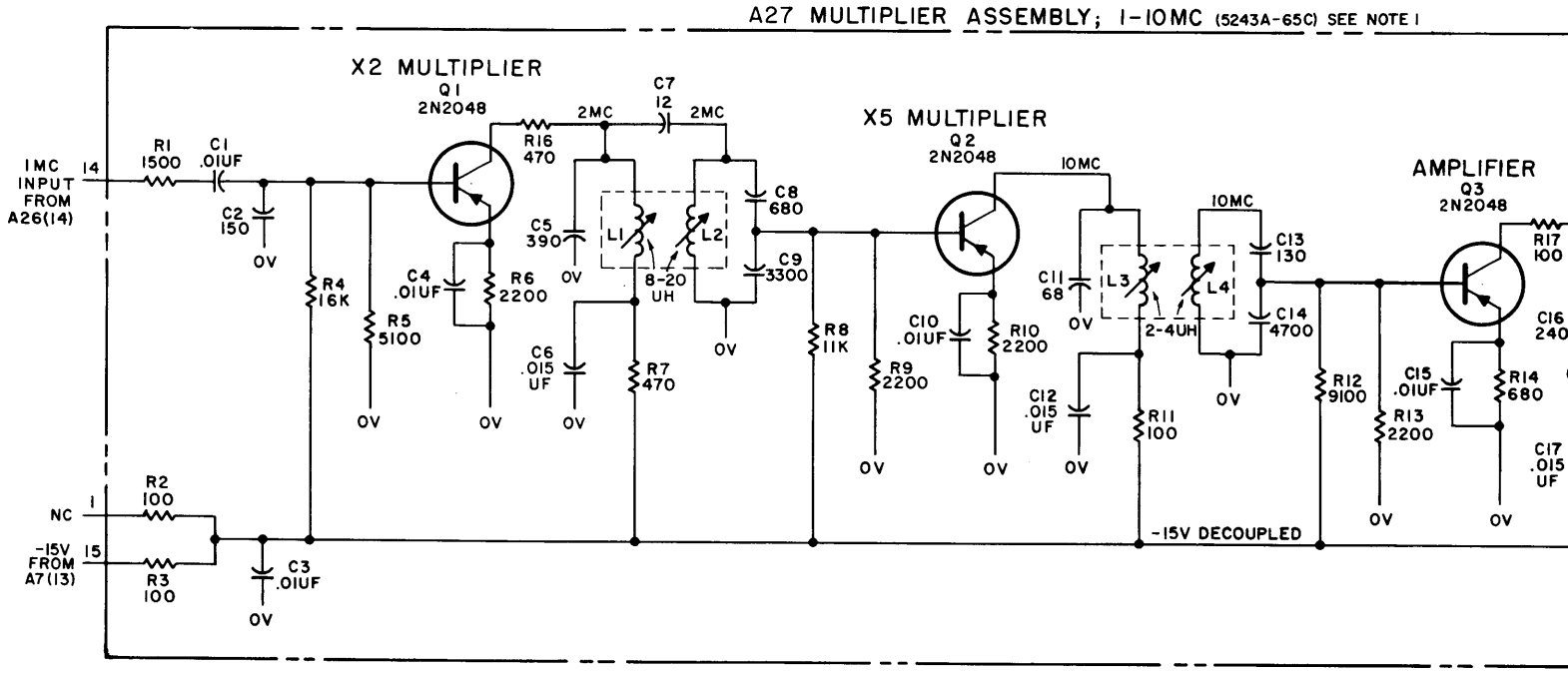

REFERENCE DESIGNATIONS

C1	20
L1	6
Q1	3
R1	17

NOTES

1. REFERENCE DESIGNATIONS WITHIN MULTIPLIER ASSEMBLY ARE INCOMPLETE; TO FORM COMPLETE REFERENCE DESIGNATION, ADD ASSEMBLY DESIGNATION A27 AS PREFIX TO INDICATED DESIGNATION.
2. L1-L2; L3-L4; L5-L6 ARE MUTUALLY COUPLED.
3. UNLESS OTHERWISE INDICATED:
   RESISTANCE IN OHMS;
   CAPACITANCE IN PICOFARADS;
   RESISTORS 1/4 WATT

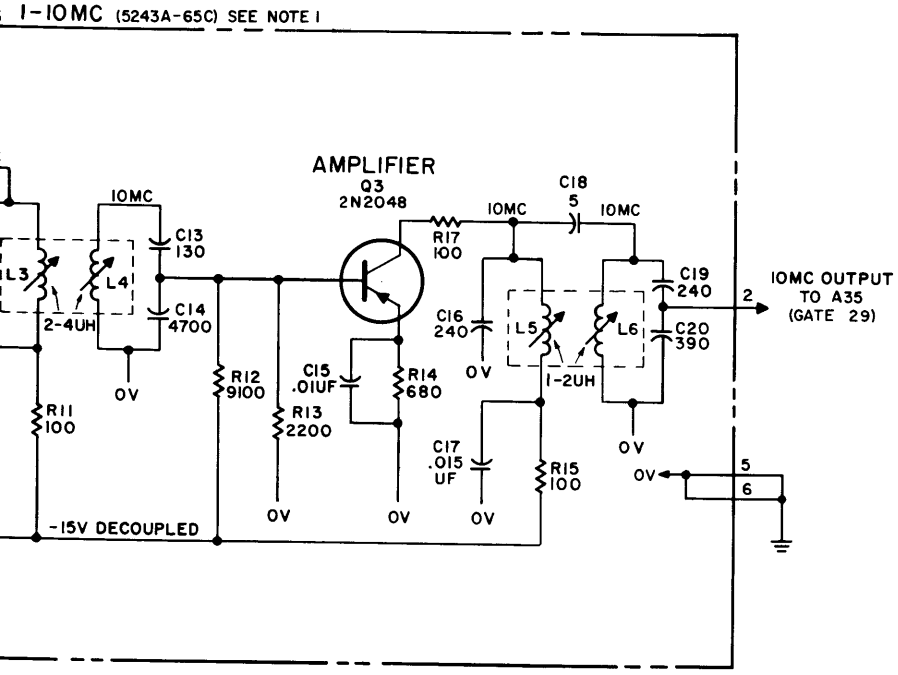

COPYRIGHT 1964 BY HEWLETT-PACKARD COMPANY
5245L/MULT-A27/408

05245-D-19

Figure 7-22. A27 Multiplier

Figure 7-23

A28 DECADE DIVIDER

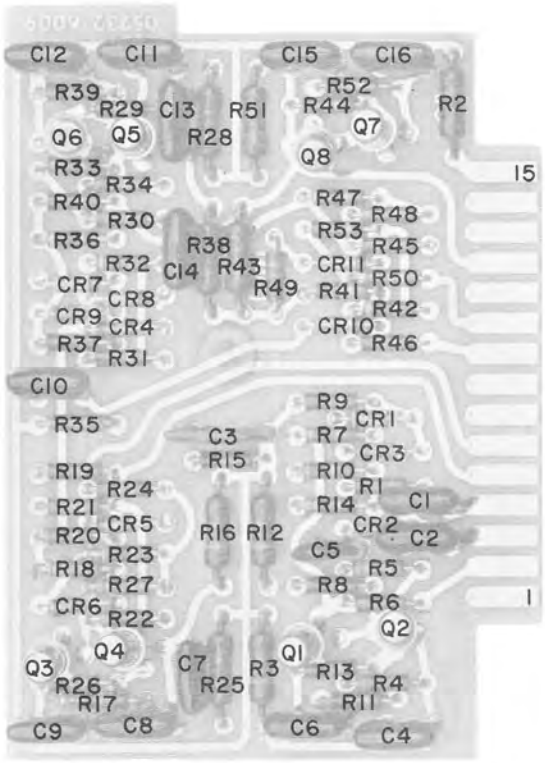
C12
C11
C15
C16
R39
R29
C13
R51
R52
R44
R2
Q6
Q5
R28
Q7
Q8
15
R33
R34
R40
R30
R47
R48
R36
R38
R53
R45
R32
C14
R43
CR11
R50
CR7
CR8
R49
R41
R42
CR9
CR4
CR10
R37
R31
R46
C10
R9
CR1
R35
C3
R7
CR3
R15
R19
R10
R1
R24
R21
R14
C1
CR5
CR2
R20
R16
R12
C2
C5
R23
R18
R5
R27
R8
R6
1
CR6
R22
Q2
Q4
Q3
C7
Q1
R3
R13
R4
R26
R25
R17
R11
C9
C8
C6
C4

A28

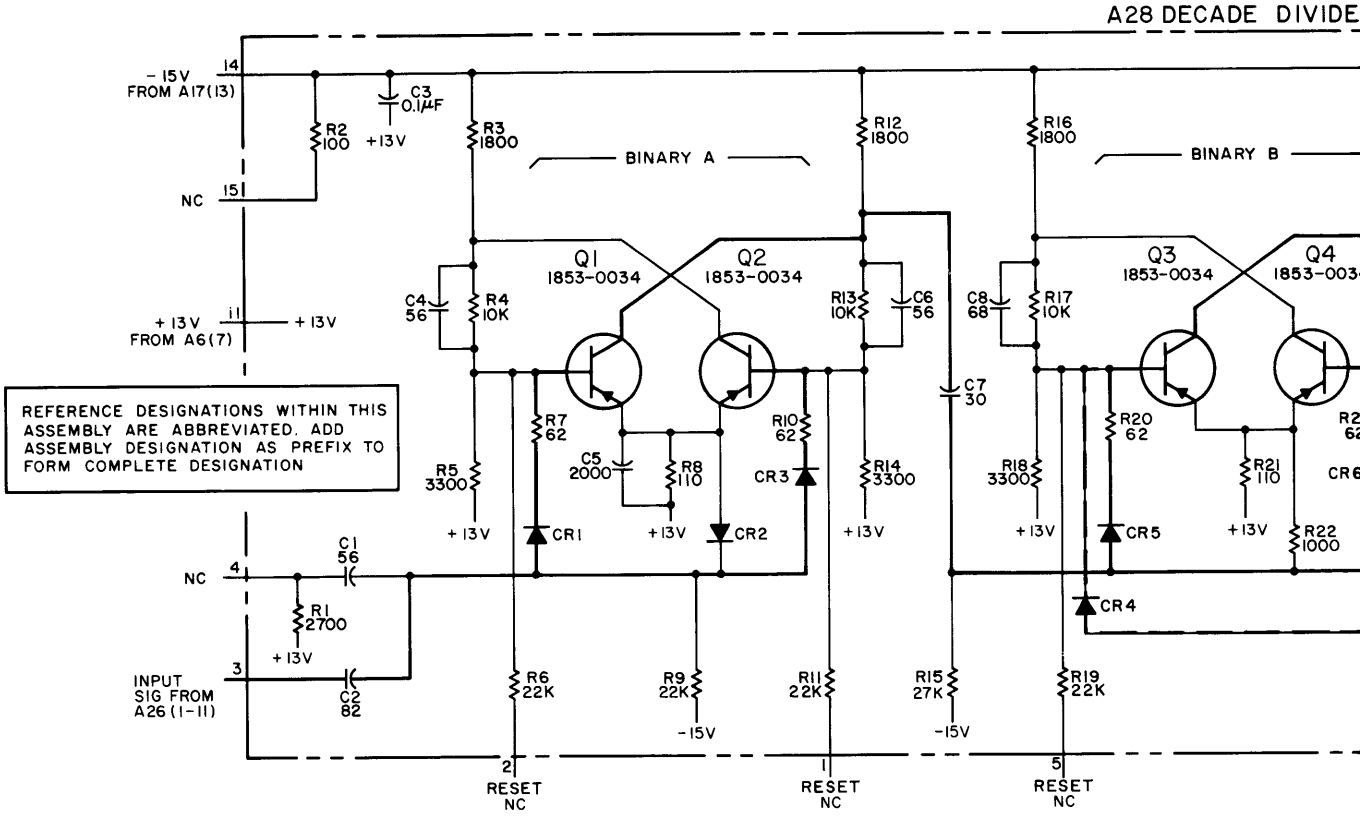

NOTES

1. UNLESS OTHERWISE INDICATED:
   RESISTANCE IN OHMS;
   CAPACITANCE IN PICOFARADS

REFERENCE DESIGNATIONS
A28
C1 - 16 CR1 - 11 Q1 - 8 R1 - 53

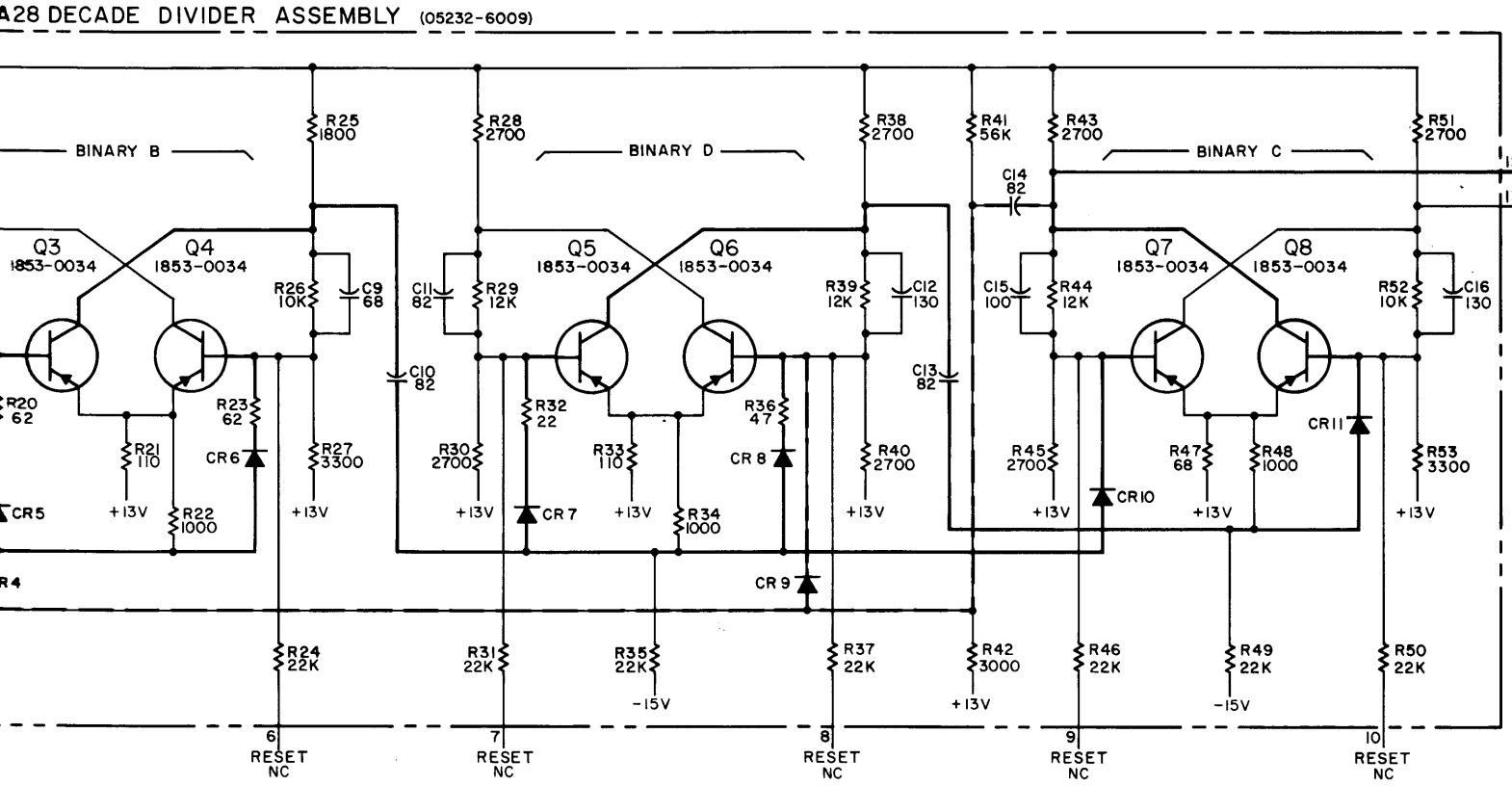

COPYRIGHT 1965 BY HEWLETT-PACKARD COMPANY

05245-D-37ABC

REFERENCE DESIGNATIONS

A28
C1 - 16 CR1 - 11 Q1 - 8 R1 - 53

Figure

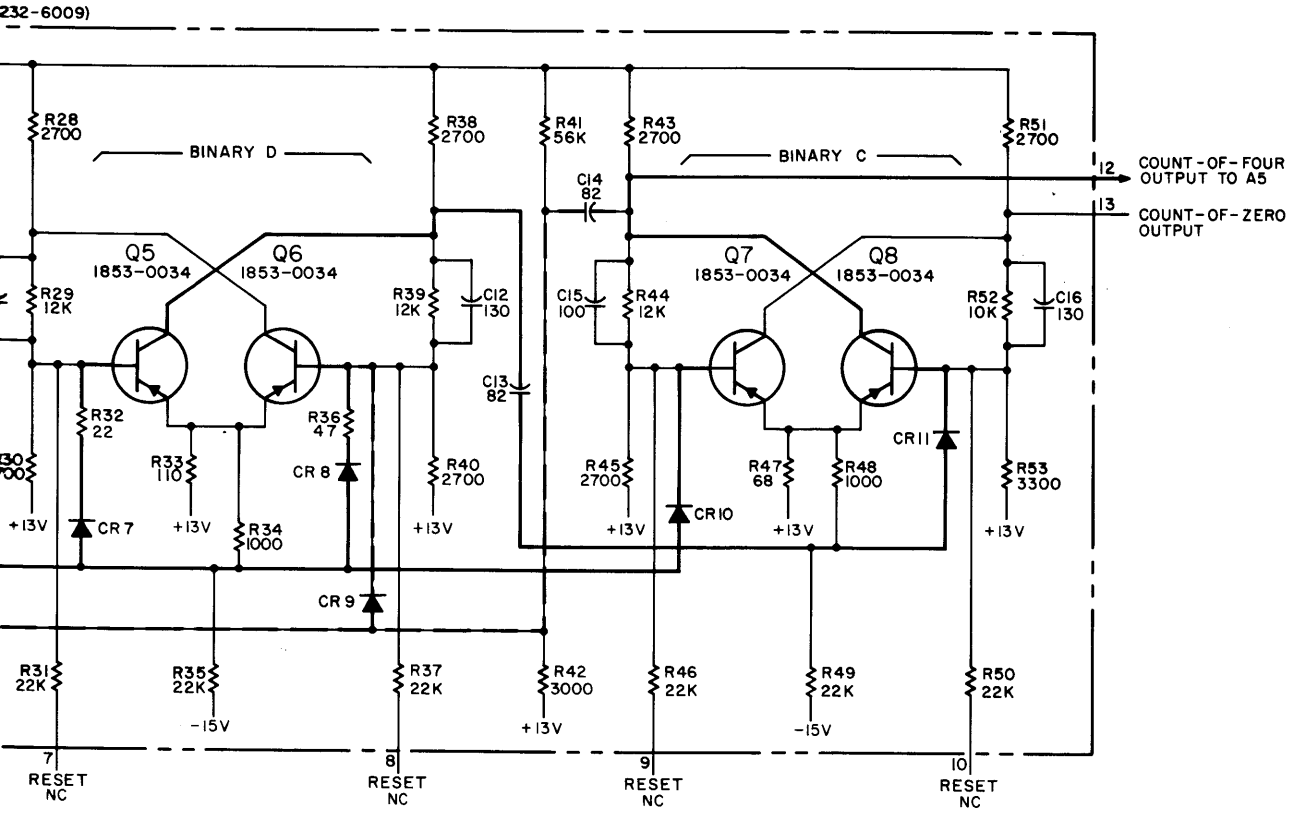

COPYRIGHT 1965 BY HEWLETT-PACKARD COMPANY

05245-D-37ABC

Figure 7-23. A28 Decade Divider

Figure 7-24

A29-A34 DECADE DIVIDER


R37
R36
C12
C11
R35
R34
C10
R26
R25
C9
C8
R24
R23
C7
R15
R14
C6
C5
R13
R12
C4
R4
R3
C3
C2
R2
R1
Q8
Q7
Q6
Q5
Q4
Q3
Q2
Q1
R42
R41
R40
R39
R38
CR4
R31
R30
R29
R28
R27
CR3
R20
R19
R18
R17
R16
CR2
R9
R8
R7
R6
R5
CR1
R46
C14
C13
R45
CR5
R44
R43
R33
R32
C1
R22
R21
R11
R10
15
1

A29-A34

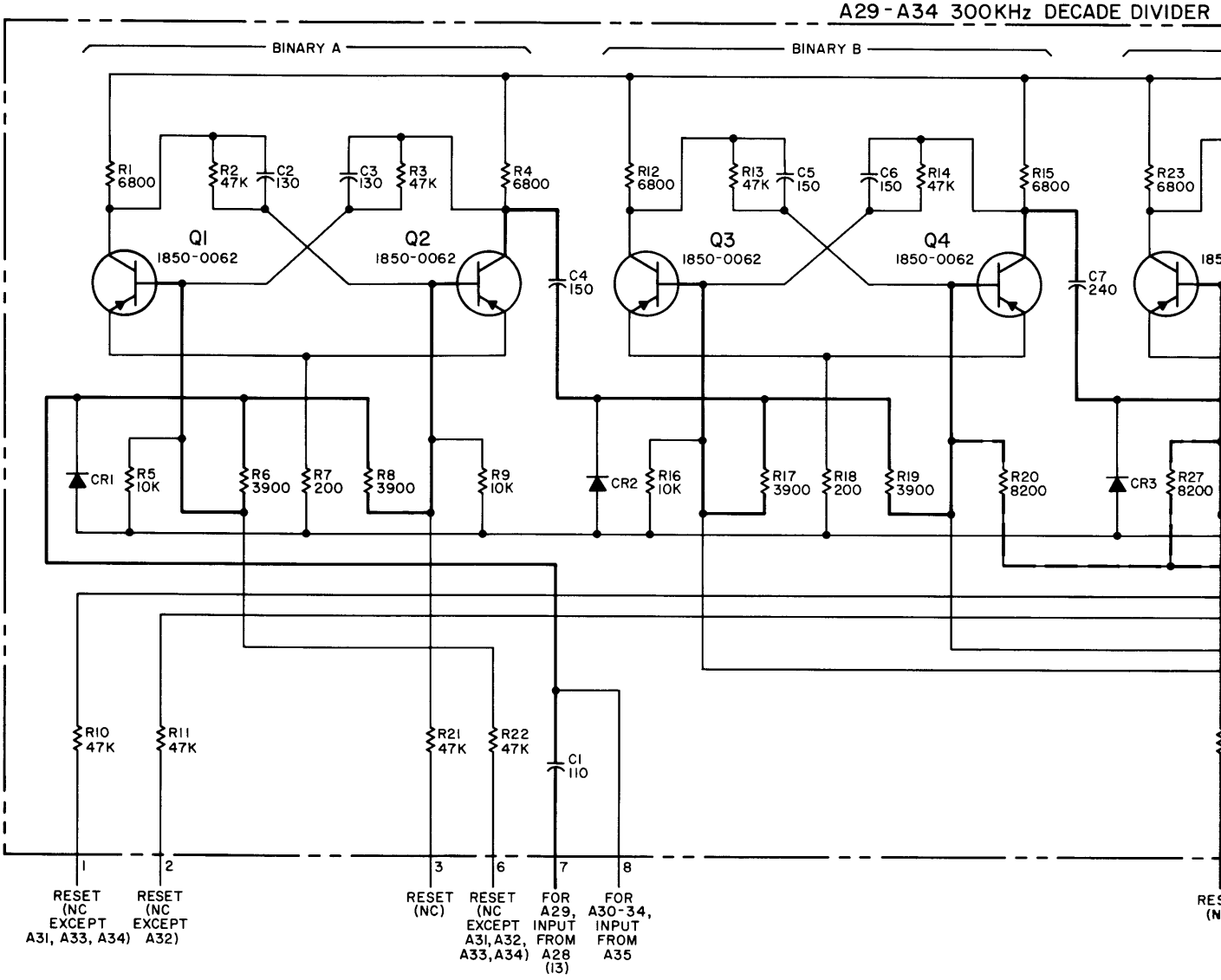

NOTES

1. **REFERENCE DESIGNATIONS WITHIN THIS ASSEMBLY ARE ABBREVIATED. ADD ASSEMBLY DESIGNATION AS PREFIX TO FORM COMPLETE DESIGNATION**
2. UNLESS OTHERWISE INDICATED:
   RESISTANCE IN OHMS
   CAPACITANCE IN PICOFARADS

REFERENCE DESIGNATIONS

A29 - A34
C1-14 CR1-5 Q1-8 R1-46

WAVEFORMS

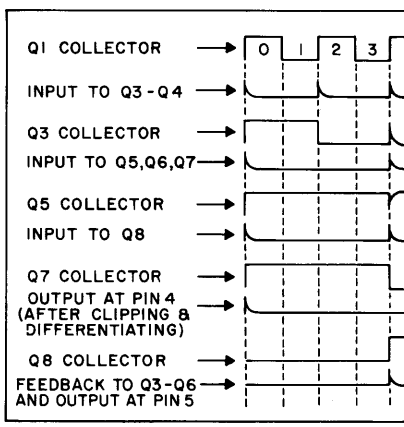

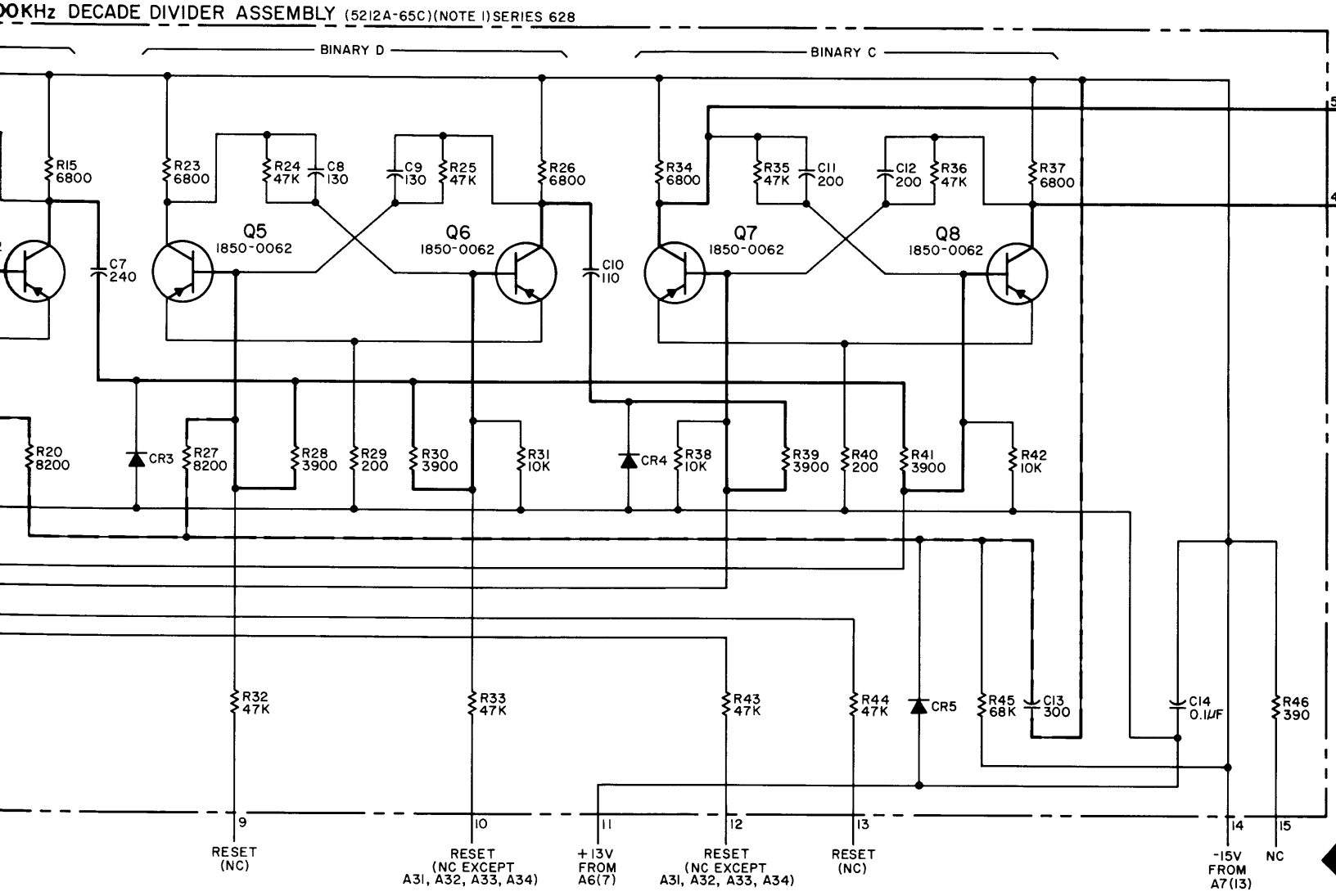

WAVEFORMS

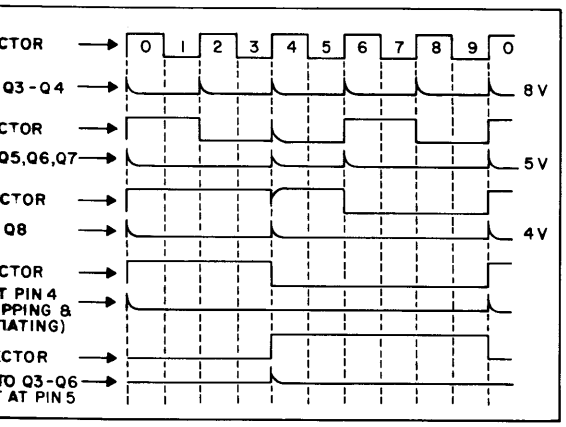

RESET WIRING

RESET NUMERAL	RESET PULSE (NEGATIVE) PIN CONNECTIONS			
0	3	13	10	1
1	6	13	10	1
2	3	12	10	1
3	6	12	10	1
4	3	12	10	2
5	6	12	10	2
6	3	13	9	2
7	6	13	9	2
8	3	12	9	2
9	6	12	9	2

COPYRIGHT 1966 BY HEWLETT-PACKARD COM

05245

Figure 7-

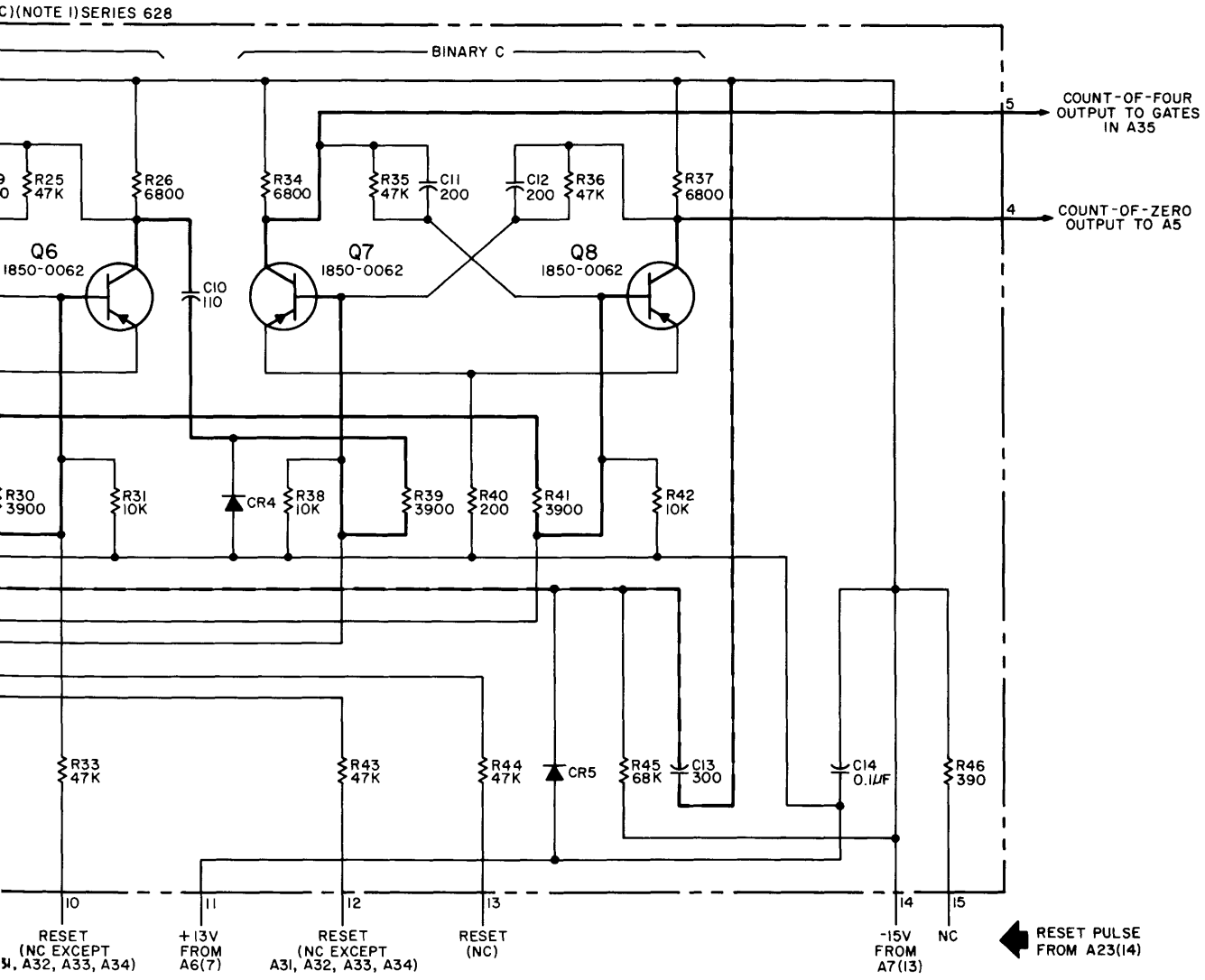

RESET WIRING

RESET NUMERAL	RESET PULSE (NEGATIVE) PIN CONNECTIONS			
0	3	13	10	1
1	6	13	10	1
2	3	12	10	1
3	6	12	10	1
4	3	12	10	2
5	6	12	10	2
6	3	13	9	2
7	6	13	9	2
8	3	12	9	2
9	6	12	9	2

COPYRIGHT 1966 BY HEWLETT-PACKARD COMPANY

05245-D-58

Figure 7-24. A29-A34 Decade Divider

Figure 7-25

A35 TIME BASE CONTROL



A35

02349-1
01243-A-12

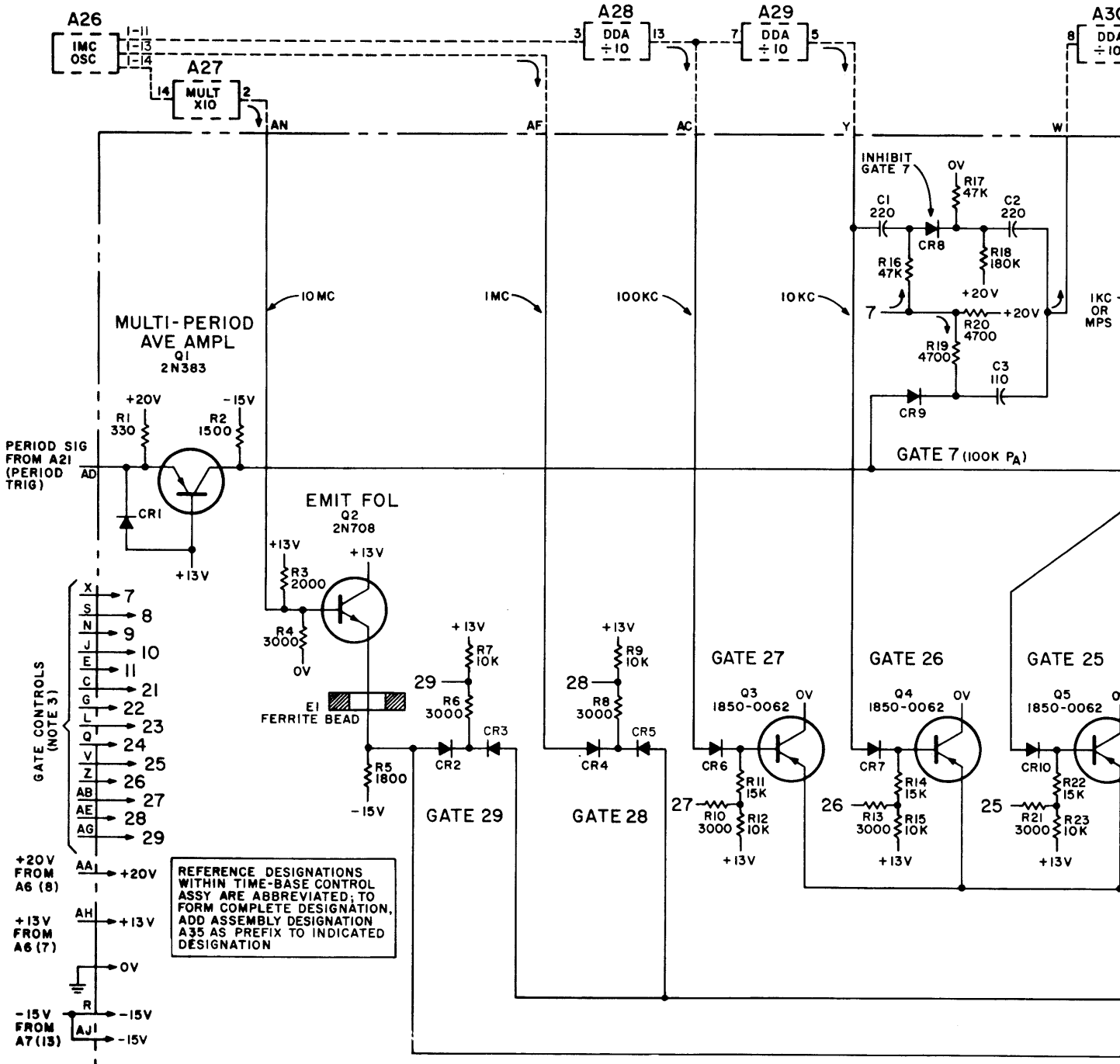

COMPONENT LOCATION (5243A-65J), FROM BOTTOM-FRONT
DOT INDICATES DIODE CATHODE

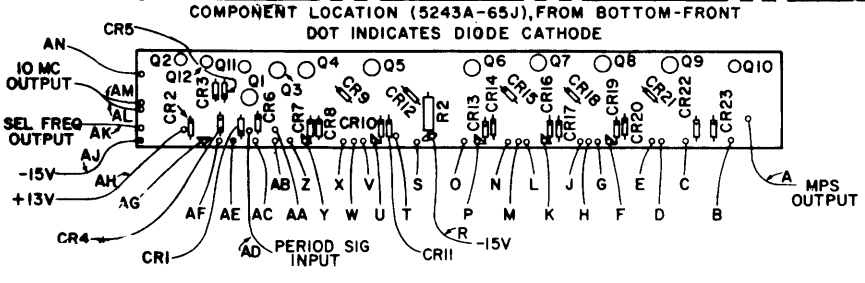

NOTES

1. UNLESS OTHERWISE INDICATED:
   RESISTANCE IN OHMS
   CAPACITANCE IN PICOFARADS
2. ABBREVIATIONS:
   MPS = MULTIPLIED PERIOD SIG
   P_A = PERIOD AVERAGE
3. SEE TABLE ON OVERALL DIAGRAM S
   FOR COMPLETE DESCRIPTION OF GA
   CONTROLS

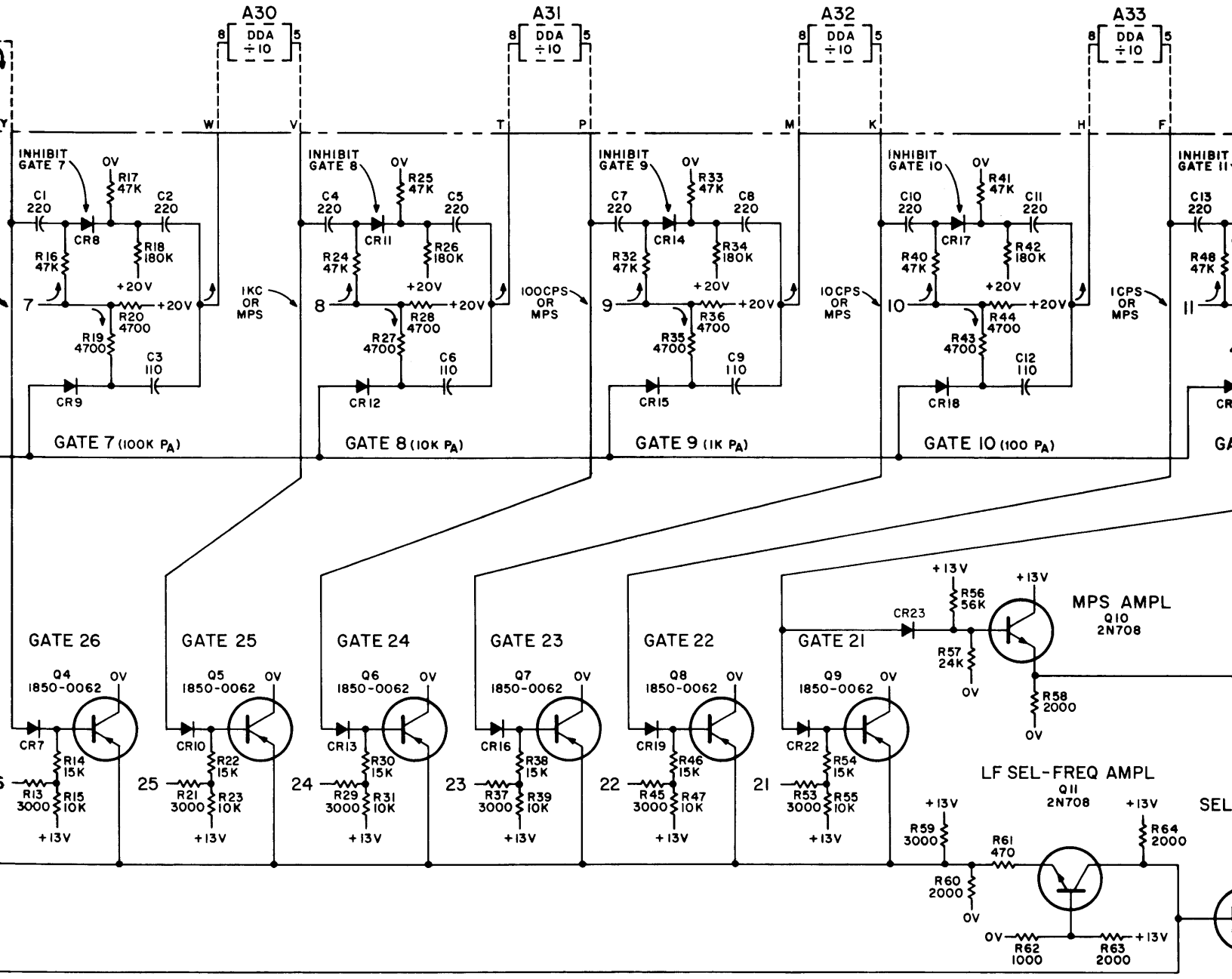

NOTES

1. UNLESS OTHERWISE INDICATED:
   RESISTANCE IN OHMS
   CAPACITANCE IN PICOFARADS
2. ABBREVIATIONS:
   MPS = MULTIPLIED PERIOD SIG
   P_A = PERIOD AVERAGE
3. SEE TABLE ON OVERALL DIAGRAM SHEET 1 FOR COMPLETE DESCRIPTION OF GATE CONTROLS

REFERENCE DESIGNATIONS

C1 - 15
CR1 - 23
E1
Q1 - 12
R1 - 65

A35 TIME BASE CONTROL ASSY (5243A-65J)

COPYRIGHT 1965 BY HEWLETT-PACKARD COMPANY

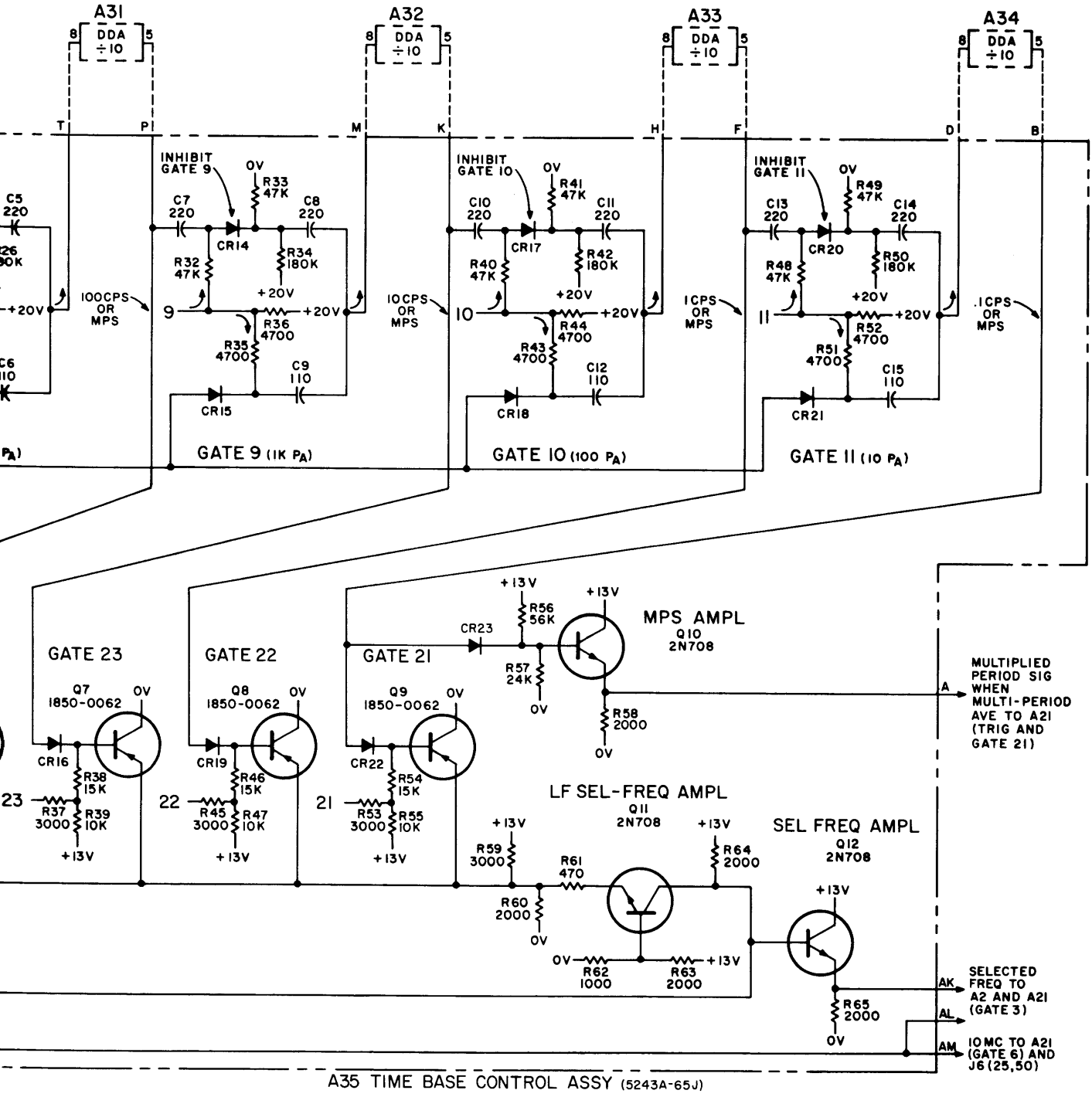

COPYRIGHT 1965 BY HEWLETT-PACKARD COMPANY

FERENCE
GNATIONS

C1 - 15
CR1 - 23
E1
Q1 - 12
R1 - 65

05245-D-23A

Figure 7-25. A35 Time Base Control

Figure 7-26

J6, J11 CONNECTORS

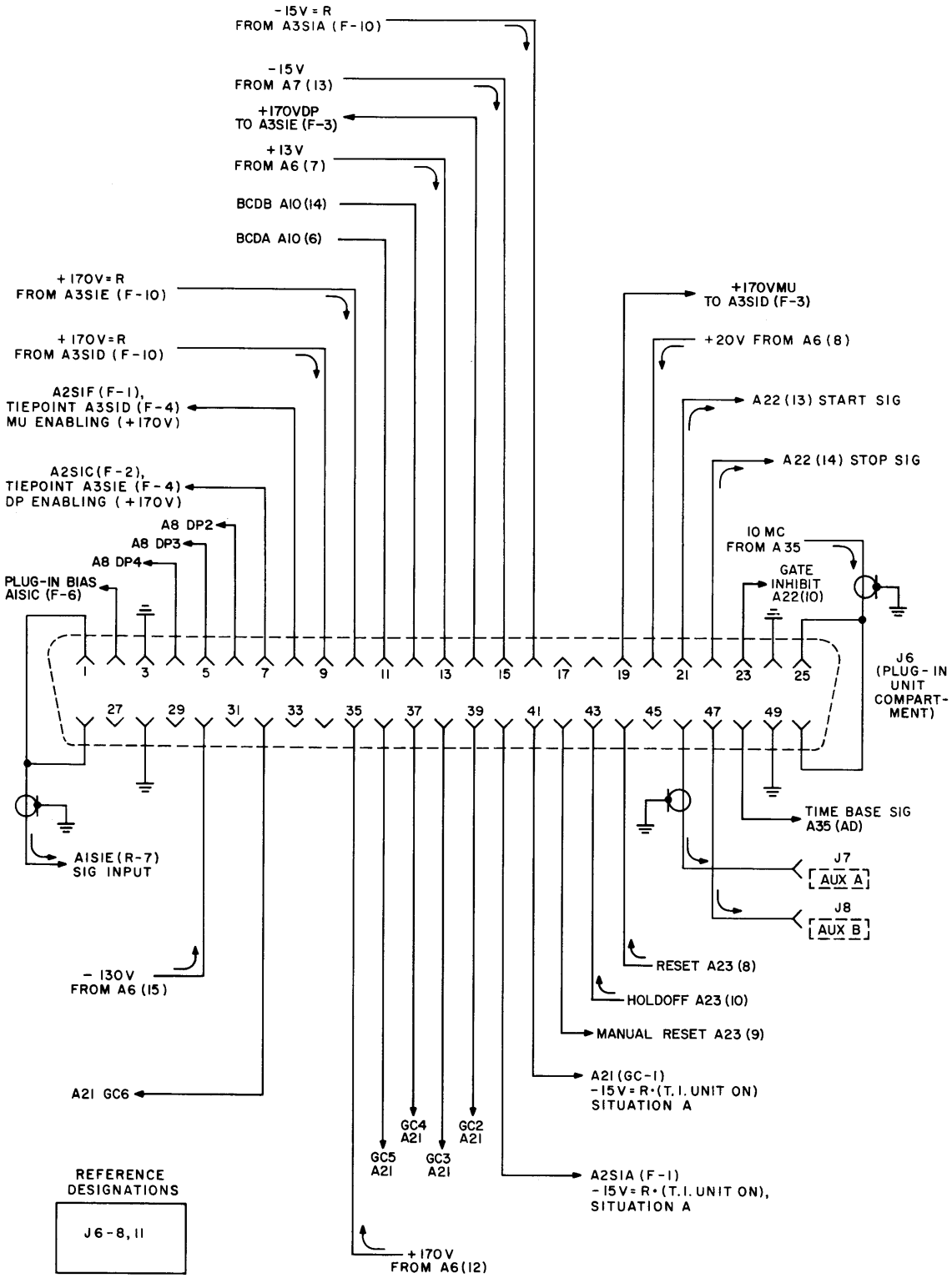
-15V=R FROM A3SIA (F-10)
-15V FROM A7 (13)
+170VDP TO A3SIE (F-3)
+13V FROM A6 (7)
BCDB A10 (14)
BCDA A10 (6)
+170V=R FROM A3SIE (F-10)
+170V=R FROM A3SID (F-10)
A2SIF (F-1), TIEPOINT A3SID (F-4) MU ENABLING (+170V)
A2SIC (F-2), TIEPOINT A3SIE (F-4) DP ENABLING (+170V)
A8 DP2
A8 DP3
A8 DP4
PLUG-IN BIAS AISIC (F-6)
+170VMU TO A3SID (F-3)
+20V FROM A6 (8)
A22 (13) START SIG
A22 (14) STOP SIG
10 MC FROM A35
GATE INHIBIT A22 (10)
J6 (PLUG-IN UNIT COMPARTMENT)
TIME BASE SIG A35 (AD)
J7 AUX A
J8 AUX B
RESET A23 (8)
HOLDOFF A23 (10)
MANUAL RESET A23 (9)
A21 (GC-1) -15V=R·(T.I. UNIT ON) SITUATION A
A2SIA (F-1) -15V=R·(T.I. UNIT ON), SITUATION A
AISIE (R-7) SIG INPUT
-130V FROM A6 (15)
A21 GC6
GC5 A21
GC4 A21
GC3 A21
GC2 A21
+170V FROM A6 (12)
REFERENCE DESIGNATIONS
J6-8, 11
TYPICAL TERMINAL ARRANGEMENT
FROM A18 (8,9)
FROM A18 (10,11)

COPYRIGHT 1965 BY HEWLETT-PACKARD

This drawing is intended for the o
and maintenance of Hewlett-Packar
ment and is not to be used othe
reproduced without written consent
Hewlett-Packard Company.

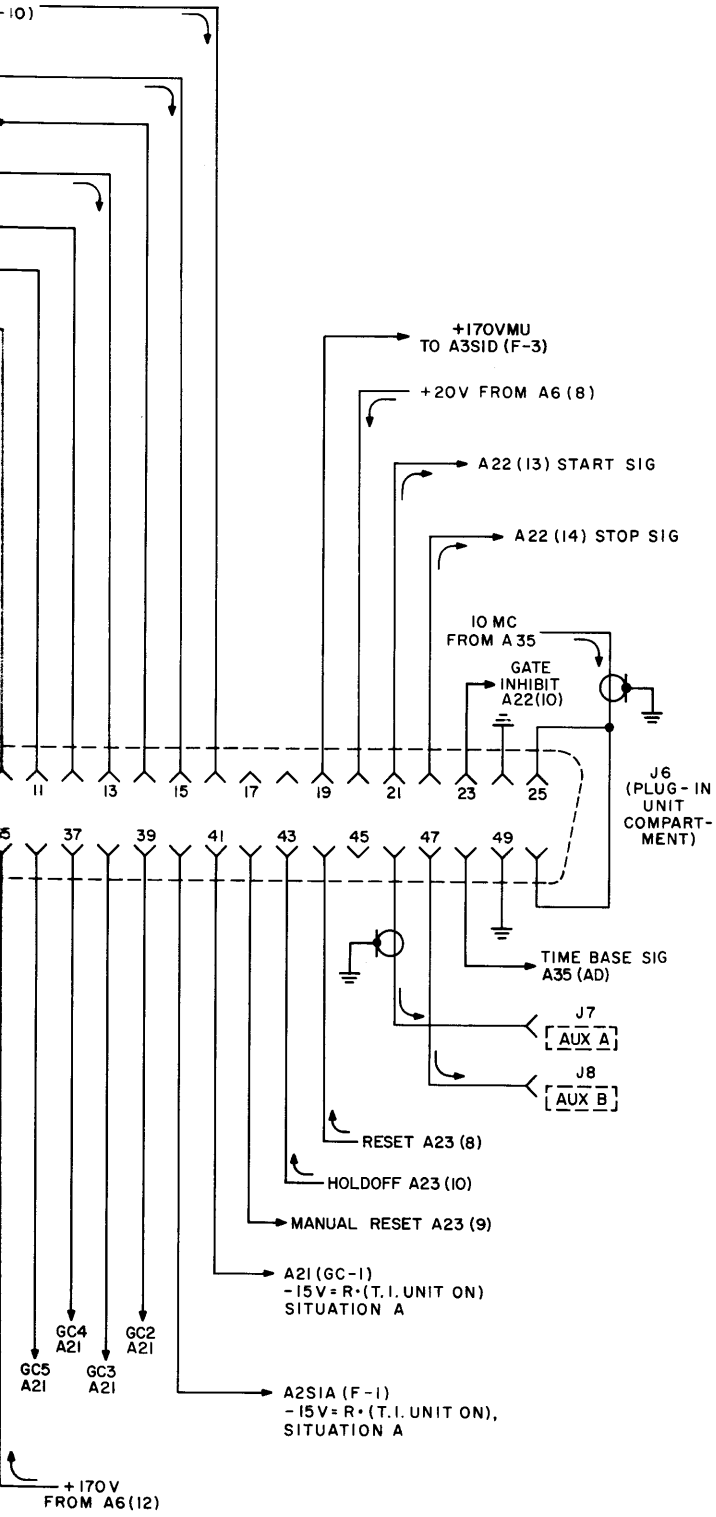

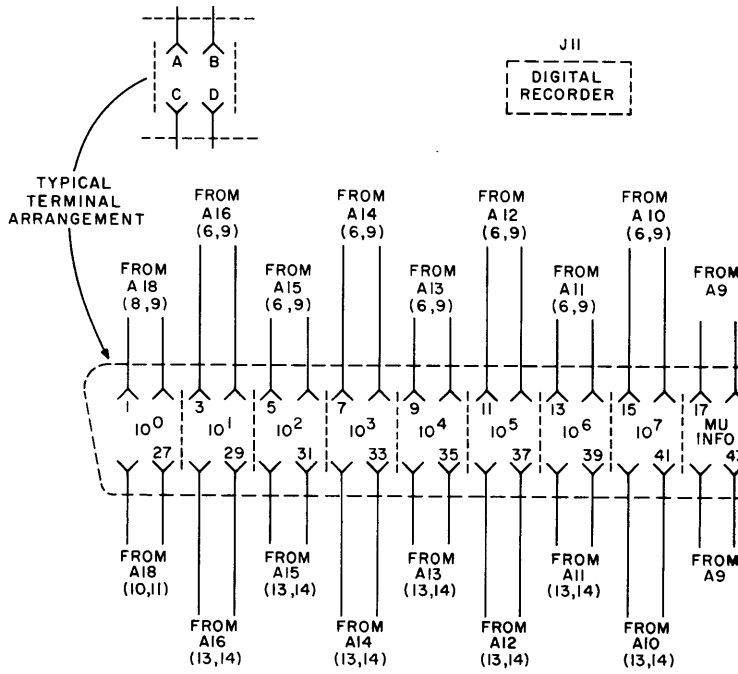

NOTES

1. ABBREVIATIONS
   - SITUATION A = IRRELEVANT VOLTAGES APPEAR IN OTHER MODES OF OPERATION
   - SITUATION B = DIFFERENT SIGNAL MAY BE SUPPLIED BY DIFFERENT PLUG-IN
   - DP = DECIMAL POINT
   - DR = DIGITAL RECORDER
   - MU = MEASUREMENT UNIT
   - T.I. = TIME INTERVAL
2. REFER TO NOTES ON FIG. 5-5 FOR ADDITIONAL ABBREVIATIONS
3. CONNECTORS VIEWED FROM WIRING SIDE

COPYRIGHT 1965 BY HEWLETT-PACKARD COMPANY

This drawing is intended for the operation and maintenance of Hewlett-Packard equipment and is not to be used otherwise or reproduced without written consent of the Hewlett-Packard Company.

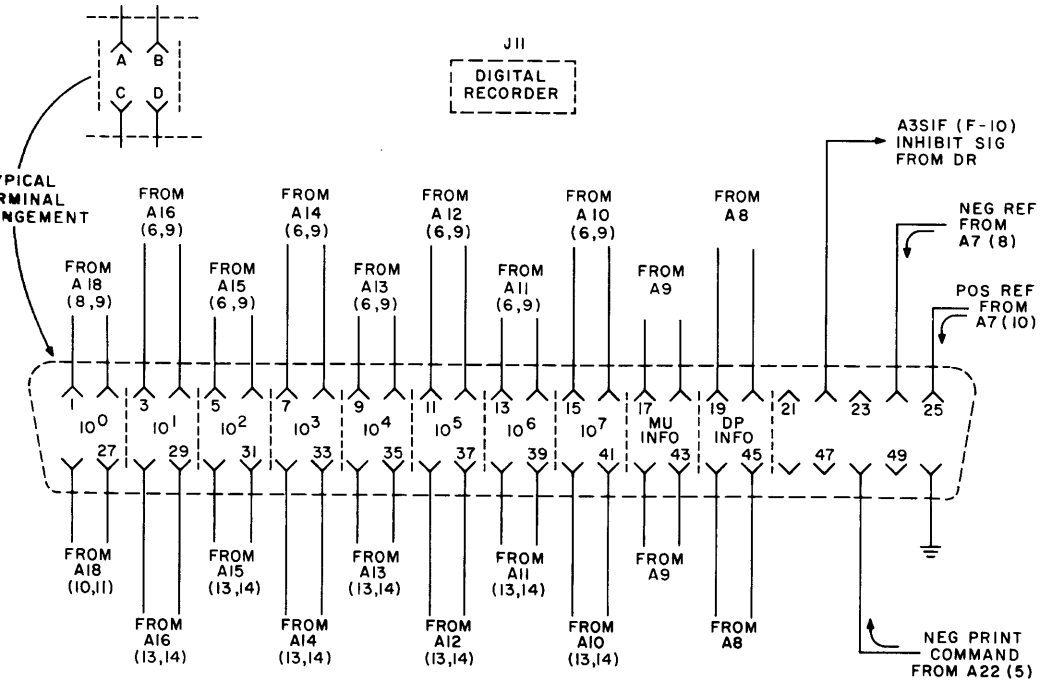

NOTES

1. ABBREVIATIONS
   - SITUATION A = IRRELEVANT VOLTAGES APPEAR IN OTHER MODES OF OPERATION
   - SITUATION B = DIFFERENT SIGNAL MAY BE SUPPLIED BY DIFFERENT PLUG-IN UNIT
   - DP = DECIMAL POINT
   - DR = DIGITAL RECORDER
   - MU = MEASUREMENT UNIT
   - T.I. = TIME INTERVAL
2. REFER TO NOTES ON FIG. 5-5 FOR ADDITIONAL ABBREVIATIONS
3. CONNECTORS VIEWED FROM WIRING SIDE

05245-D-33AB

Figure 7-26. J6, J11 Connectors

SALES AND SERVICE OFFICES
UNITED STATES and CANADA

ALABAMA
Huntsville, 35802
2003 Byrd Spring Rd. S.W.
(205) 881-4591
TWX: 510-579-2204

ALASKA
Bellevue, Wash. 98004
11656 N.E. 8th Street
(206) 454-3971
TWX: 910-443-2303

ARIZONA
Scottsdale, 85251
3009 No. Scottsdale Rd.
(602) 945-7601
TWX: 602-949-0111

Tucson, 85716
232 So. Tucson Blvd.
(602) 623-2564
TWX: 602-792-2759

CALIFORNIA
North Hollywood, 91604
3939 Lankershim Blvd.
(213) 877-1282 and 766-3811
TWX: 910-499-2170

Sacramento, 95821
2591 Carlsbad Ave.
(916) 482-1463
TWX: 916-444-8683

San Diego, 92106
1055 Shafter Street
(714) 223-8103
TWX: 714-276-4263

Palo Alto, 94303
1101 Embarcadero Rd.
(415) 327-6500
TWX: 910-373-1280

COLORADO
Englewood, 80110
7965 East Prentice
(303) 771-3455
TWX: 910-935-0705

CONNECTICUT
Middletown, 06457
589 Saybrook Rd.
(203) 346-6611
TWX: 710-428-2036

FLORIDA
Miami, 33125
2907 Northwest 7th St.
(305) 635-6461

Orlando, 32803
621 Commonwealth Ave.
(305) 425-5541
TWX: 305-841-2568

St. Petersburg, 33708
410-150th Ave., Madeira Beach
(813) 391-0211 and 391-1829
TWX: 813-391-0666

GEORGIA
Atlanta, 30305
3110 Maple Drive, N.E.
(404) 233-1141
TWX: 810-751-3283

HAWAII
North Hollywood, Calif. 91604
3939 Lankershim Blvd.
(213) 877-1282
TWX: 910-499-2170

ILLINOIS
Skokie, 60076
5500 Howard Street
(312) 677-0400
TWX: 910-223-3613

INDIANA
Indianapolis, 46205
3919 Meadows Dr.
(317) 546-4891
TWX: 317-635-4300

LOUISIANA
New Orleans
(504) 522-4359

MARYLAND
Baltimore, 21207
6660 Security Blvd.
(301) 944-5400
TWX: 710-862-0850

Rockville, 20852
12303 Twinbrook Pkwy.
(301) 427-7560
TWX: 710-828-9684

MASSACHUSETTS
Burlington, 01803
Middlesex Turnpike
(617) 272-9000
TWX: 710-332-0382

MICHIGAN
Southfield, 48076
24315 Northwestern Hwy.
(313) 353-9100
TWX: 313-357-4425

MINNESOTA
St. Paul, 55114
2459 University Ave.
(612) 646-7881
TWX: 910-563-3734

MISSOURI
Kansas City, 64114
9208 Wyoming Place
(816) 333-2445
TWX: 910-771-2087

St. Louis, 63144
2812 South Brentwood Blvd.
(314) 644-0220
TWX: 910-760-1670

NEW JERSEY
Eatontown, 07724
(201) 747-1060

Englewood, 07631
391 Grand Avenue
(201) 567-3933
TWX: 510-230-9709

NEW MEXICO
Albuquerque, 87108
6501 Lomas Blvd., N.E.
(505) 255-5586
TWX: 910-989-1655

Las Cruces, 88001
114 S. Water Street
(505) 526-2486
TWX: 910-983-0550

NEW YORK
New York, 10021
236 East 75th Street
(212) 879-2023
TWX: 710-581-4376

Rochester, 14623
39 Saginaw Drive
(716) 473-9500
TWX: 510-253-5981

Poughkeepsie, 12601
82 Washington Street
(914) 454-7330
TWX: 914-452-7425

Syracuse, 13211
5858 East Molloy Rd.
(315) 454-2486
TWX: 710-541-0482

Endicott, 13764
1219 Campville Rd.
(607) 754-0050
TWX: 510-252-0890

NORTH CAROLINA
High Point, 27262
1923 N. Main Street
(919) 882-6873
TWX: 510-926-1516

OHIO
Cleveland, 44129
5579 Pearl Road
(216) 884-9209
TWX: 216-888-0715

Dayton, 45409
1250 W. Dorothy Lane
(513) 298-0351
TWX: 513-944-0090

OKLAHOMA
Oklahoma City
(405) 235-7062

PENNSYLVANIA
Camp Hill
(717) 737-6791

West Conshohocken, 19428
144 Elizabeth Street
(215) 248-1600 and 828-6200
TWX: 518-660-8715

Monroeville, 15146
Monroe Complex
Building 2
Suite 2
Moss Side Blvd.
(412) 271-5227
TWX: 710-797-3650

TEXAS
Dallas, 75209
P.O. Box 7166, 3605 Inwood Rd.
(214) 357-1881
TWX: 910-861-4081

Houston, 77027
P.O. Box 22813, 4242 Richmond Ave.
(713) 667-2407
TWX: 713-571-1353

UTAH
Salt Lake City, 84115
1482 Major St.
(801) 486-8166
TWX: 801-521-2604

VIRGINIA
Richmond, 23230
2112 Spencer Road
(703) 282-5451
TWX: 710-956-0157

WASHINGTON
Bellevue, 98004
11656 N.E. 8th St.
(206) 454-3971
TWX: 910-443-2303

GOVERNMENT CONTRACTING OFFICE
San Antonio, Texas 78226
Hewlett-Packard
Contract Marketing Division
225 Billy Mitchell Road
(512) 434-4171
TWX: 512-571-0955

CANADA
Montreal, Quebec
Hewlett-Packard (Canada) Ltd.
8270 Mayrand Street
(514) 735-2273
TWX: 610-421-3484
Telex: 01-2819

Ottawa, Ontario
Hewlett-Packard (Canada) Ltd.
1762 Carling Avenue
(613) 722-4223
TWX: 610-562-1952

Toronto, Ontario
Hewlett-Packard (Canada) Ltd.
1415 Lawrence Avenue West
(416) 249-9196
TWX: 610-492-2382

Vancouver, B.C.
Hewlett-Packard (Canada) Ltd.
2184 W. Broadway
(604) 738-7520
TWX: 610-922-5059

SALES AND SERVICE OFFICES
INTERNATIONAL - Electronic Equipment

ARGENTINA
Mauricio A. Suarez
Telecommunicaciones
Carlos Calvo 224
Buenos Aires
Tel. (30-6312) (34-9087)

AUSTRALIA
Sample Electronics (Vic) Pty., Ltd.
9-11 Cremorne Street
Richmond E.1, Victoria
Tel. 42-4757

Sample Electronics (N.S.W.) Pty, Ltd.
4 Grose Street
Glebe, New South Wales
Tel. 69-6338

AUSTRIA
Unilabor H.m.b.H.
Wissenschaftliche Instrumente
Rummelhardtgasse 6/3
P.O. Box 33, Vienna IX/71
Tel. 426 181

BELGIUM
Hewlett-Packard Benelux S.A.
20-24 rue de l'Hopital
Brussels
Tel. 11 22 20

BRAZIL
Ciental Importacao e Comercio Ltda.
Rua des Eliseu Guilherme, 62
Sao Paulo 8
Tel. 70-2318

CHILE
Hector Calcagni
Casilla 13942
Santiago
Tel. 6.42.26

DENMARK
Tage Olsen A/S
Ronnegade 1
Copenhagen 0
Tel. 29 48 00

FINLAND
INTO O/Y
Meritullinkatu 11
P.O. Box 153
Helsinki
Tel. 6 11 33

FRANCE
Hewlett-Packard France
150 Boulevard Massena
Paris 13
Tel. 707 97 19

Hewlett-Packard France
2 rue Tete d'Or
Lyon, 6 - Rhone
Tel. 52 35 66

GERMANY
Hewlett-Packard Vertriebs-GmbH
Kurhessenstrasse 95
Frankfurt a. Main
Tel. 52 00 36

Hewlett-Packard Vertriebs-GmbH
Reginfriedstrasse 13, Munich 9
Tel. 49 51 21

Hewlett-Packard Vertriebs-GmbH
Beim Strohhause 26/28
Hamburg 1
Tel. 24 05 51

Hewlett-Packard Vertriebs-GmbH
(Technisches Buro)
Herrenberger Strasse 110
Böblingen, Wurttemberg
Tel. 6971

Hewlett-Packard Vertriebs-GmbH
Lietzenburger Strasse 30
1 Berlin W 30
Tel. 24 86 36

Hewlett-Packard Vertriebs-GmbH
Achenbachstrasse 15
4 Dusseldorf 1,
Tel. 68 52 58

GREECE
K. Karayannis
Klaftmonos Square
Athens 124
Tel. 230 301

INDIA
The Scientific Instrument Co., Ld.
6, Tej Bahadur Sapru Road
Allahabad 1
Tel. 2451

The Scientific Instrument Co., Ld.
240, Dr. Dadabhai Naoroji Road
Bombay 1
Tel. 26-2642

The Scientific Instrument Co., Ld.
11 Esplanade East, Calcutta 1
Tel. 23-4129

The Scientific Instrument Co., Ld.
30 Mount Road, Madras 1
Tel. 86339

The Scientific Instrument Co., Ld.
B-7, Ajmeri Gate Extn.
New Delhi 1
Tel. 271053

IRAN
Telecom, Ltd.
P.O. Box 1812
Teheran
Tel. 43850, 48111

ISRAEL
Electronics & Engineering Ltd.
Division of Motorola Israel Ltd.
16, Kremenetski Street, Tel-Aviv
Tel. 35021

ITALY
Hewlett-Packard Italiana S.p.A.
Viale Lunigiana 46, Milan
Tel. 69 15 84

Hewlett-Packard Italiana S.p.A.
Palazzo Italia
Piazza Marconi 25, Rome-Eur
Tel. 591 2544

JAPAN
Yokogawa-Hewlett-Packard Ltd.
#59, 1-chome
Yoyogi
Shibuya-ku
Tokyo,
Tel. 370-2281

Yokogawa-Hewlett-Packard Ltd.
#8, Umeda
Kita-ku, Osaka City
Tel. 313-0091

Yokogawa-Hewlett-Packard Ltd.
#4, 3-chome
Himeikedori
Chigusa-ku, Nagoya City
Tel. 751-8545

KOREA
American Trading Co., Korea, Ltd.
Seoul P.O. Box 1103
112-35 Sokong-Dong
Jung-ku, Seoul
Tel. 3.7049, 3.7613

LEBANON
Constantin E. Macridis
Clemenceau Street
Clemenceau Center
Beirut
Tel. 220846

NETHERLANDS
Hewlett-Packard Benelux, N.V.
23 Burg, Roellstraat
Amsterdam, W.
Tel. (020) 13 28 98

NEW ZEALAND
Sample Electronics (N.Z.) Ltd.
8 Matipo Street
Onehunga S.E. 5, Auckland
Tel. 565-361

NORWAY

Morgenstierne & Co. A/S
Ingeniofirma
6 Wessels Gate, Oslo
Tel. 20 16 35

PAKISTAN
Mushko & Company, Ltd.
Oosman Chambers
Victoria Road
Karachi 3, West Pakistan
Tel. 54601

Mushko & Company, Ltd.
Zirat Chambers
31, Jinnah Avenue
Dacca, East Pakistan
Tel. 80058

PANAMA
Electronico Balboa, S.A.
P.O. Box 4929
Panama City
Tel. 3-0833

PERU
Fernando Ezeta B
Av. Petit Thouars 4719
Mira Flores, Lima
Tel. 5-0346

PORTUGAL
Telectra
Rua Rodrigo da Fonseca 103
P.O. Box 2531, Lisbon 1
Tel. 68 60 72

PUERTO RICO
San Juan Electronics, Inc.
Ponce de Leon No. 150, Stop 3
Pta. de Tierra Sta., San Juan
Tel. 725-3342

SPAIN
Ataio Ingenieros
Enrique Laretta 12
Madrid, 16
Tel. 235 43 44-5

SOUTH AFRICA
F.H. Flanter & Co. (Pty.), Ltd.
Rosella House
Buitencingle Street
Cape Town
Tel. 3-3817

F.H. Flanter & Co.,(Pty.), Ltd.
P.O. Box 200, Bramley
775 Pretoria Main Road
Wynberg, Transvaal
Tel. 40-6871

SWEDEN
HP Instrument AB
Centralvagen 28
Solna Centrum
Tel. 08-83 08 30

HP Instrument AB
Box 4028
Indunagatan 28A
Molndal 4
Tel. 27 68 00

SWITZERLAND
Max Paul Frey
Wankdorffeldstrasse 66
Berne
Tel. (031) 42 00 78

TAIWAN
Hwa Sheng Electronic Co., Ltd.
P.O. Box 1558
21 Nanking West Road
Taipei
Tel. 46076, 45936

TURKEY
Telekom Engineering Bureau
P.O. Box 376 - Galata
Istanbul
Tel. 49 40 40

UNITED KINGDOM
Hewlett-Packard Ltd.
Dallas Road
Bedford, England
Tel. 68052

VENEZUELA
Citec, C.A.
Edif. Arisan–Of. No. 4
Avda. Francisco de Miranda
Chacaito
Caracas
Tel. 71.88.05

YUGOSLAVIA
Belram S.A.
83 Avenue des Mimosas
Brussels 15, Belgium
Tel. 35 29 58

For Sales and Service Assistance in Areas Not Listed Contact:

EUROPE
Hewlett-Packard, S.A.
54 Route des Acacias
Geneva, Switzerland
Tel. (022) 42.81.50

ELSEWHERE
Hewlett-Packard
1501 Page Mill Road
Palo Alto, California 94304, U.S.A.
Tel. (415) 326-7000

HEWLETT hp PACKARD

05245-9009

PRINTED IN U.S.A.