General Radio - 1390 B Random Noise Generator



General Radio 1390-B random noise generator provides high levels of electrical noise over three selectable ranges, 20KHz, 500KHz and 5MHz. The generator uses as noise source a gas tube, type 6D4, operating in a transverse magnetic field.

This generator had a variety of uses, including psychoacoustic and electroacoustic tests, room acoustic tests, noise measurements of electronic amplifiers. 5,4 kg

Early sixties. Schematic diagram below.

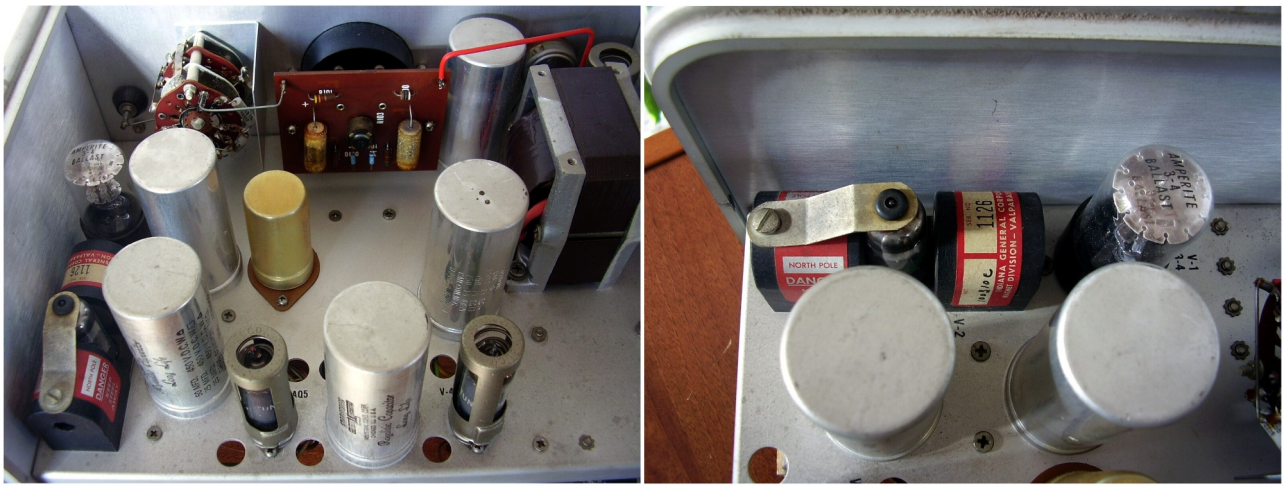

Internal view with the magnet assembly on the left and details of the assembly.

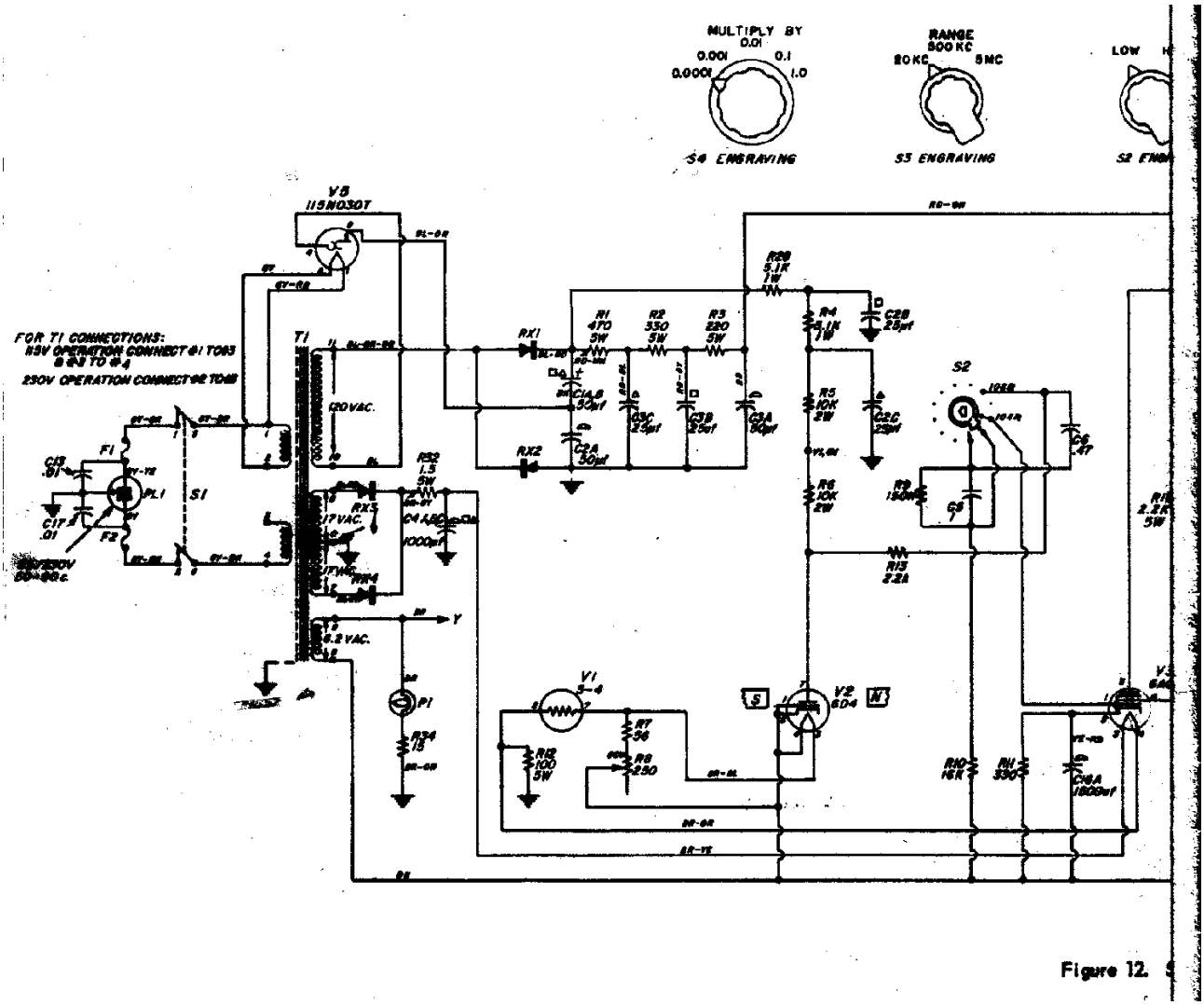
MULTIPLY BY
0.01
0.001
0.1
0.0001
1.0
S4 ENGRAVING
RANGE
500 KC
20 KC
5 MC
S3 ENGRAVING
LOW
V5
115N030T
FOR T1 CONNECTIONS:
115V OPERATION CONNECT #1 TO #3 & #2 TO #4
230V OPERATION CONNECT #2 TO #3
T1
120 VAC.
17 VAC.
6.2 VAC.
F1
F2
PL1
S1
RX1
RX2
RX3
RX4
R1
470
5W
R2
330
5W
R3
220
5W
R4
5.1K
1W
R5
10K
2W
R6
10K
2W
R28
5.1K
1W
C2B
25µf
C2C
25µf
C3A
50µf
C3B
25µf
C3C
25µf
C2A
50µf
C1A,B
50µf
S2
C6
47
R9
150W
C5
1
R13
2.2A
R32
1.5
5W
C4 A,B,C
1000µf
P1
R34
15
V1
5-4
R7
56
R8
250
R12
100
5W
V2
6D4
R10
16K
R11
330
C16A
1800µf
R16
2.2K
5W

Figure 12.

POWER
DELAYED ON

IGH

OFF

SI ENGRAVING

RAVING

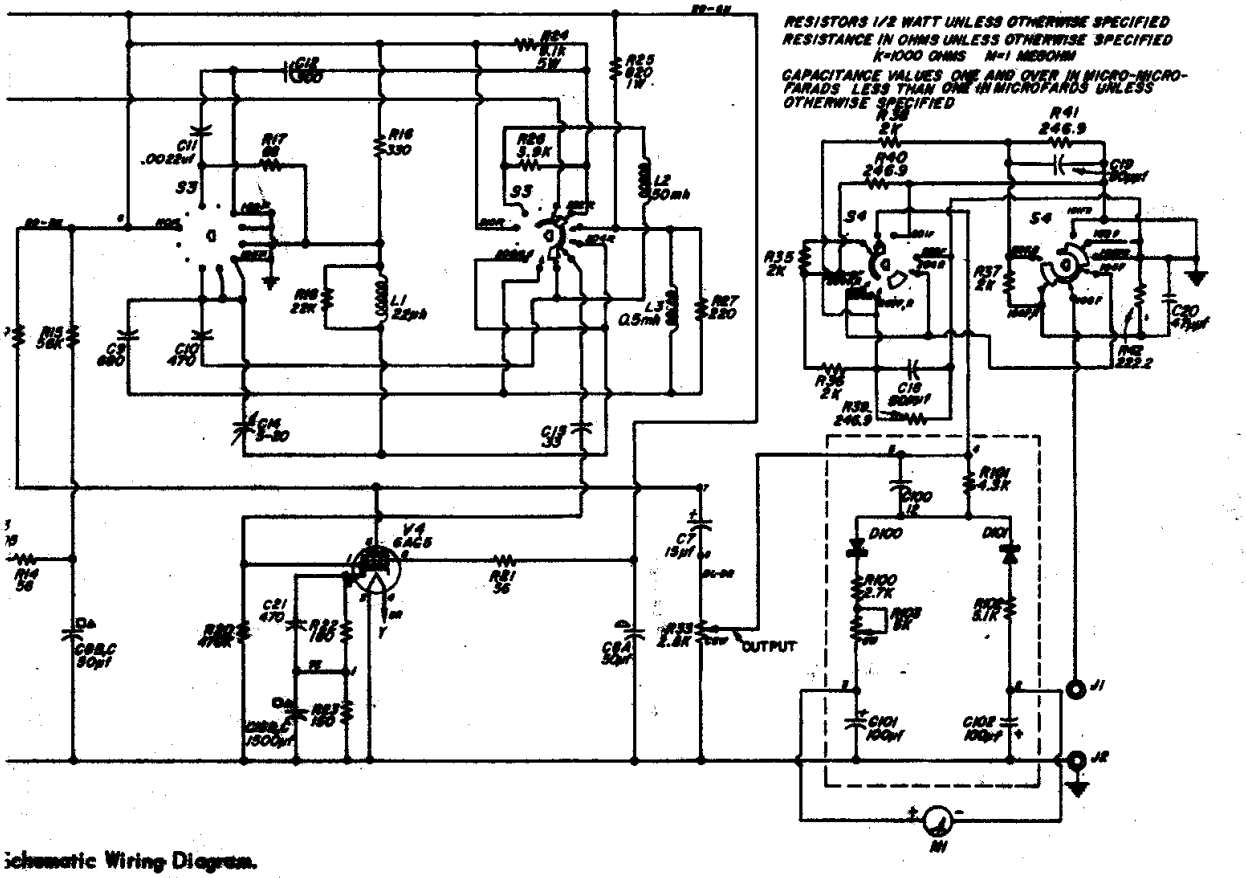

Schematic Wiring Diagram.