SPR-110LX Super Pro Communication Receiver



The Hammarlund Super Pro SP-110L series was a family of low frequency variant of the SP-110. Depending upon the customer needs, one or two low frequency bands replaced one or two broadcast or sw bands. This sample has the following frequency coverage over five tuning ranges:

100-200 kHz, 200-400 kHz, 2.5-5.0 MHz, 5-10 MHz, 10-20 MHz

Other band choices were also offered, such as 150-300 kHz, 540-1160 kHz, 1160-2500 kHz, 2.5-5.0 MHz, 5.0-20 MHz.

Introduced around 1937, its design was the classic single-conversion superheterodyne with two RF amplifying stages. Variable coupling IF transformers for 3 to 16 KHz bandwidth. Push-pull audio amplifier. Very high quality components were used in this top class receiver advertised below, from Electronics, January 1938.

Two RF amplifiers, 465 kHz IF with continuously variable bandwidth. The X suffix indicates the presence of the optional crystal filter. The R in the prefix indicates the rack mounting version.

14 vacuum tubes were used in the receiver, plus two rectifiers in the external power supply: 6K7, 6K7, 6L7, 6J7, 6D6, 6D6, 6D6, 6B7, 6C6, 6B7, 6C5, 6F6, 6F6, 6F6, 5Z3, 80. User and service manual available below.

Keep them alive!

Precision RECEIVER . . .

Precision MADE

Photos, by Halbran, of the making of a Hammarlund Super-Pro receiver used by amateurs, by aviators, by radio people generally for monitoring, for communication.

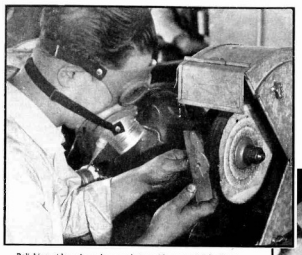

Polishing sides of condenser plates with a special buffing machine, removes burrs and smoothes surface for high surface electrical conductivity

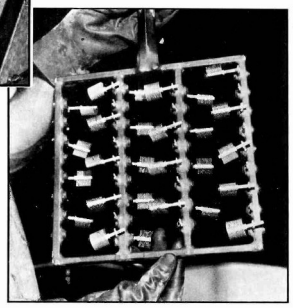

Plating rack with cadmium plated condenser sections hung up to dry. Plating insures non-corrosion and high electrical conductivity

Cam mechanism used in Super-Pro switch mounted eccentrically actuates Bakelite sections with silver plated knives. Switch is over 12 inches long, weighs nearly 3 pounds



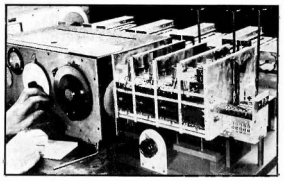

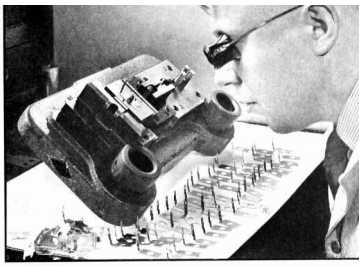

Progressive pierce, blank form and cut-off die for small intricate parts. Weighs 92 pounds, costs $1000, takes a month to make



Isolantite base tuning coil—each of which is checked after winding, after installation on base, and after installation in unit. In the lower left of this photo may be seen the complicated wave band switch



Checking accuracy of condenser plates with micrometer. In background is a vernier heighth gage and below is a thickness gage to measure air gaps

Left—Matching the tuning and band spread condensers. There are 16 condensers in this unit, each to be measured and inspected

www.americanradiohistory.com

INSTRUCTION MANUAL

FOR THE

"SUPER-PRO" RECEIVER

SP-110L SERIES

★

FORM NO. SP — 110-

HAMMARLUND MFG. CO., INC., 424-438 W. 33rd ST., N.Y.C., U.S.A.

TABLE OF CONTENTS

I - INTRODUCTION

II - CIRCUIT DESCRIPTION AND THEORY OF OPERATION

(a) General Mechanical Description

(b) Basic Circuit

(c) Theory

(d) Main Tuning Unit

1 - Band Change Switch

2 - Main Tuning Condenser

3 - Band Spread Condenser

4 - Tuning Coils

(e) Selectivity Control

(f) Automatic Volume Control

(g) Beat Oscillator

(h) Audio System

(i) Crystal Filter

III - INSTALLATION

(a) Complete Equipment

(b) Antenna

(c) Preliminary Procedure

(d) Connecting Complete Equipment

IV - OPERATION

(a) Classification of Controls

(b) Set-up Controls

(c) Operating Controls

(d) Correct Operating Procedure

(e) Manipulation of Sensitivity Control

(f) Manipulation of Audio Gain Control

(g) Band Spread Tuning

(h) Tuning Meter

V - MAINTENANCE

(a) General

(b) Alignment

1 - Equipment required

2 - Alignment of I.F. - A.V.C. and Beat Osc. Circuits

3 - Alignment of H.F. osc. and R.F. Circuits

4 - Alignment of Crystal Filter Model

VI - PARTS LIST

VII - ILLUSTRATIONS

FIGURE 1 - Front View Standard Model

2 - Top View of Receiver Chassis

3 - View of Main Tuning Unit Showing Tuning Coils

4 - View of Band Change Switch

5 - Section of Band Change Switch

6 - View of Main Tuning Unit Showing Dials

7 - View of H.F. Osc. Coil showing Capacity and Inductance Trimmers

8 - View of Variable Coupling I.F. Transformer

9 - Schematic Diagram - Receiver

10 - Schematic Diagram - Power Supply

11 - Connecting Complete Equipment

12 - Connecting Complete Equipment for Emergency Battery Operation

13 - Tabulation of Voltages

14 - Main Tuning Unit - Bottom View, Cover Plate in place

15 - Bottom View of Receiver Chassis - Covers Removed

16 - Top View Power Supply Chassis

17 - Bottom View Power Supply Chassis - Cover Removed

18 - Crystal Filter Circuit

INTRODUCTION

The "Super-Pro" is more than a new radio receiver. It is wholly a new idea in modern ALL WAVE reception. It is the latest addition to a famous line of radio products and the result of 25 years experience in building the best radio equipment possible. At no time during the development of the "Super Pro" was the cost considered a limiting factor, it being decided to produce a standard by which really satisfactory All-Wave reception can be judged.

A successful radio receiver intended for use over a wide frequency range as well as for a variety of services must possess many and varied characteristics. In the design of the "Super Pro", extreme flexibility was the foremost consideration rather than resorting to innumerable compromises.

The first choice to be made was that between plug-in coils and coil switching. Although plug-in coils might possess slight technical advantages and be desirable in some instances, the practical advantages of coil switching admit of no argument. This is especially true in the case of usable sensitivity. In a well designed receiver this sensitivity is limited by the noise in its input circuit and the first tube. Since this first circuit must be efficiently coupled to an antenna or other pick-up device, it is felt that this first circuit noise will seldom prove to be a limiting factor under practical receiving conditions. Also an electrostatically shielded input circuit was considered highly desirable and such an input circuit is impractical with plug-in coils. Therefore, coil switching was chosen, utilizing a switch of entirely new design.

The selectivity of a receiver is almost invariably a compromise with its fidelity requirements. However, in the various services for which the "Super Pro" is intended, both selectivity and fidelity requirements are so far from uniform that a satisfactory compromise is impossible. Even in a single definite service a compromise value is seldom completely satisfactory. Therefore,

the selectivity of the "Super Pro" is "continuously variable" throughout a wide range. The characteristics of the audio system alone are such that fidelity is limited only by the setting of the "Band-Width" control on the front panel.

Only the highest grade materials and component parts are used throughout and the construction of the receiver is extremely rugged. These factors insure dependability over long periods of continuous operation. It is therefore, recommended for use in "amateur telephone and telegraph stations", experimental and professional work of all kinds, as well as any other service requiring an outstanding receiver of such flexibility and dependability. The "Super-Pro" is also highly recommended to D X enthusiasts interested in the reception of foreign broadcast and short wave programs.

It is the desire of the Hammarlund Mfg. Co., Inc. that every operator of a "Super Pro" obtains the most satisfactory performance of which the receiver is capable. With this thought in mind we urge you to read the detailed description contained in this manual, and to follow carefully the recommendations on operation and installation.

CIRCUIT DESCRIPTION AND THEORY OF OPERATION

GENERAL MECHANICAL DESCRIPTION

The "Super Pro" consists of two major units - the receiver proper and the power supply unit. The receiver chassis is cadmium plated steel .062" thick and measures 17" X 14 7/32" and is 3 1/2" deep. Two panels are available: one for the table model and the other for rack installation. Both panels are 3/16" aluminum 10 15/32" high. The panel for the table model is 18" wide, while the panel rack mounting is the standard width of 19" and has four mounting notches on each side arranged to fit a standard relay rack.

The panel is securely attached to the front of the chassis by means of 5/16" spacing studs, and by heavy diagonal braces extending from the sides of the chassis deck to the upper corners of the panel. The same overall shield or dust cover is used for both table and rack mounting models. It is secured to the back of the panel by spade bolts and nickel-plated knurled thumb nuts, and to the rear skirt of the chassis by knurled thumb screws.

The power supply unit is also mounted on a cadmium plated steel chassis .062" thick. Like the receiver, it also is available for table or rack mounting. The table mounting unit is 13" by 7 5/8" by 8 1/2" high and is enclosed in a dust cover to match the receiver. The rack mounting model is secured to a 3/16" aluminum panel 19" wide and 8 3/4" high with appropriate mounting notches, and has a shield or dust cover secured by thumb nuts as in the case of the rack mounting receiver. All panels and dust covers are black wrinkle finished, in a durable dull black.

Receiver and power supply units are equipped with cadmium plated steel bottom cover plates, having heavy, felt covered feet in the corners.

All controls are mounted on the receiver panel and comprise the following:-

1. MAIN TUNING CONDENSER
2. BAND SPREAD TUNING CONTROL
3. BAND SWITCH CONTROL
4. OFF-ON POWER SWITCH
5. AUDIO FREQUENCY GAIN CONTROL
6. SENSITIVITY CONTROL
7. C.W. - MODULATION SWITCH
8. BEAT FREQUENCY CONTROL
9. A.V.C. -- MANUAL SWITCH
10. PHONES JACK
11. BAND-WIDTH CONTROL
12. SEND-RECEIVE SWITCH
13. CRYSTAL CONTROLS

These controls are suitably designated by engraving on the panel clearly indicating their functions. (Fig. 1)

BASIC CIRCUIT

The "Super Pro" is of the superheterodyne, or double-detection type, consisting of two stages of Radio Frequency or signal-frequency amplification; first detector or mixer; high-frequency or heterodyne oscillator; three stages of intermediate frequency amplification; combination fourth Intermediate Frequency stage and second detector; amplified Automatic Volume Control system; beat oscillator (at intermediate frequency); and three stages of audio frequency amplification. (Fig. 9) A separate power unit operating from 110 volt, 60 cycle AC supplies plate voltage, grid bias voltage, speaker field current, and heater current. (Fig. 10) Although primarily designed for complete alternating current operation, a special cable can be furnished to permit emergency operation from a storage "A" battery and dry "B" and "C" batteries. No change in the receiver is necessary for battery operation.

The frequency range of this receiver is 100 kilocycles to 20.0 megacycles covered in five bands controlled by the band-change switch.

THEORY

A well designed superheterodyne is in reality a combination of two distinct receivers of rather special design which, when used together, constitute a remarkably efficient radio receiving system. The first part of such a system is connected to the receiving antenna and selects and amplifies the incoming signal, delivering it to the first detector or mixer, where it is heterodyned by the local high-frequency oscillator to produce a new frequency called the intermediate frequency. The second part of the system is a complete and highly efficient radio receiver with <u>fixed</u> tuning which responds to signals of the intermediate frequency produced by the first unit. Since the tuning and all other adjustments on this receiver are fixed, it is obvious that its performance can be more exactly controlled than in the case of a receiver which must be tunable over a relatively wide frequency range. In general, most of the gain and selectivity of the entire receiving system are obtained from this fixed-tuned unit. For instance, in the "Super Pro", this intermediate amplifier consists of nine tuned circuits in cascade, an impractical number to control with variable tuning. The mechanical or structural separation of these two parts has been carried out almost as completely as their electrical or functional separation. In the following description the first part will be referred to as the "Tuning Unit" and the second part as the "Receiver".

TUNING UNIT

The TUNING UNIT is a completely enclosed rigid unit and mounts in a large rectangular cut-out in the center of the receiver chassis, approximately half below and half above the chassis deck. Only eight leads project through rubber grommets in the sides of this unit and connect to the receiver proper. The Tuning Unit comprises the band-change switch, main tuning condenser, band-spread condenser, tuning coils, tuning dials, dial masks, and dial lamps. (Fig. 3)

The BAND CHANGE SWITCH has five sections completely shielded from each other. (Fig. 4) Each section constitutes a two-pole five-position switch of unique design. The basic principle is that of the standard knife switch, which has proven so dependable. Silver plated knives, mounted on bakelite panels sliding in guides, are raised and lowered by cams on the switch shaft. In the lowered position three knives engage pairs of contacts on the switch base, thereby closing the circuit. The base contacts are of spring bronze, silver plated and each has six separate contact fingers to further insure dependable low resistance connections. This design eliminates the necessity for pig-tails, wiping rotary contacts (and even the pivot of the knife blade, which is probably the chief source of trouble in the standard knife switch). Since the switch knives merely enter and leave the spring base contact as the circuits are closed and opened, there is no "passing through" action with its attendant wear. Consequently there is no chance to build up a conducting path of metallic particles between contacts nor is it possible to drag dirt or other foreign matter into the contact. No moving part carries current to cause noise or provide stray coupling, and the circuit isolation and shielding between sections is substantially perfect. Silver plated short-circuiting springs automatically short the four open contacts at all times. All five positions are passed through by one revolution of the switch shaft, and the five contact points (72° apart) are very definitely located by an accurate and positive detent mechanism. No stop is used as the switch can be continuously rotated in either direction. (Fig. 5)

The timing of the cams and arrangement of contacts is such that the circuit through one set of knives is not broken until contact is made with another set. This avoids sparking in the sections which handle plate current and also prevents open grid circuits when the switch is turned. The switch also connects or disconnects band-spread condensers.

The MAIN TUNING CONDENSER has four sections of 180 mmf. each. The rotor plates are of the "Midline" type which results in a reasonably uniform frequency scale for the two to one tuning range used in the receiver under discussion. The stators are mounted on Isolantite blocks which are in turn mounted on the shield partitions forming the framework of the "Tuning Unit". The rotor shaft is of stainless steel. The rear bearing is a single steel ball between a cupped adjusting screw and a cupped depression in the end of the rotor shaft. The front bearing is a long self-aligning brass bushing mounted in a circular spring bronze plate to take the thrust of the single ball rear bearing. In addition there are three intermediate bearings mounted on the three shield partitions. These intermediate bearings are of special design to afford low resistance contact to the rotor shaft to minimize inter-stage coupling. As in the case of the band-change switch the isolation and shielding of the four sections of this condenser is substantially perfect.

The BAND-SPREAD CONDENSER is mechanically identical with the main tuning condenser. While divided into four main sections, each of these sections has their separate rotors and stators. In this way an appropriate degree of "band-spread" can be secured in each of the three high-frequency bands. To illustrate, each division of the Band Spread dial in the 14.0 to 14.4 mc. amateur band covers approximately 4.5 kilocycles. In the 7.0 to 7.3 and 3.5 to 4.0 mc. bands, the coverage is approximately 4 and 5 kc. respectively. These coverages afford comfortable, non-critical tuning in the high-frequency ranges without an unnecessary amount of dial twisting. On the two lower frequency bands this condenser is automatically cut out of circuit by the band-change switch.

The Tuning Coils are mounted on individual Isolantite bases which are in turn secured to the shield partitions of the lower half of the Tuning Unit. There are twenty-five coils in all; five for each of the five bands. In each band the input circuit comprises two coils—an antenna or primary coil, and a

grid or secondary coil. These two coils are effectively shielded from each other electrostatically by a Faraday screen placed between them. Transfer of energy from antenna to grid is thus limited to pure electro-magnetic coupling. The third and fourth coils in each band are conventional radio-frequency transformers, and the fifth is the high-frequency or heterodyne oscillator coil. Each coil has a trimming capacitor mounted on its Isolantite base for circuit alignment at the high-frequency end of its range. At the low-frequency end alignment is accomplished by adjusting the inductance by means of a copper disc on an adjusting screw turning in a friction bushing mounted in the top of each coil form. (Fig. 7). In the case of the five oscillator coils the trimming capacitors consist of air dielectric variables similar to those used in the intermediate frequency transformers. The coils for the lowest frequency range are four-band litz windings while the others are space-wound solenoids on low loss bakelite tubing.

The tuning dials are laminated translucent celluloid with their scales printed on the center lamination. (Fig. 6) The indices are black-filled engraved lines on clear celluloid strips mounted close to the surface of the tuning dials, thus reducing parallax to a minimum. Each dial is brightly illuminated from the rear and the distinct graduations together with the sharp indicating lines make quick and accurate settings a simple matter. The main tuning dial has five concentric frequency scales as follows:

100 - 200 kilocycles
200 - 400 kilocycles
2.5 - 5.0 megacycles
5.0 - 10.0 megacycles
10.0 - 20.0 megacycles

Only one scale is visible at a time - a slotted black mask controlled by the Band-Change Switch knob automatically exposes the scale corresponding to the frequency range for which the switch is set. Both dials are rotated smoothly and easily by friction drives entirely free from backlash. The knob drives have a ratio of twelve to one, requiring approximately five and one-half turns to

cover a complete frequency range. The Band-Spread dial is calibrated in 100 equal divisions. Due to the circuit used for band-spreading, its readings are almost exactly "straight-line frequency", consequently the "kilocycles per scale division" remain practically constant from 0 to 100. The calibrations of the Main Dial are based on a Band-Spread dial setting of 100. Decreasing the Band-Spread dial reading lowers the frequency of resonance of the receiver and vice-versa.

BAND-WIDTH CONTROL

The width of the band passed by the Intermediate Frequency Amplifier is continuously variable by means of a calibrated control on the front panel. This control simultaneously varies the coupling between the primaries and secondaries of the first three I.F. transformers, except in the case of the crystal models. Since both primary and secondary of each transformer are tuned this variation of coupling changes the response characteristic from a single sharp peak in the minimum coupling position to a wide double-humped curve in the position of maximum coupling. The total range of coupling provided by the panel control is from approximately one-third optimum in the narrow position, to about three times optimum in the wide position. The control being continuously variable, any intermediate value between these two extremes is readily obtainable. Inasmuch as the "Band-Width" control operates simultaneously on three transformers in cascade, the change in overall selectivity is tremendous. At the same time, such a wide change in coupling also results in a wide variation in gain (except when operating on AVC). When the Manual Gain Controls are being used the receiver gain rises rapidly as the coupling is increased until optimum coupling is secured. Thereafter, any further increase in coupling causes a falling off in gain as the response characteristic widens and becomes double-humped. As in the case of selectivity, the change in gain is exaggerated because it takes place simultaneously in three cascaded stages. Due to the regulation of the AVC system, this

change in gain is not noticeable when using automatic gain control.

These three variable coupling I.F. transformers (Fig. 8) constitute the input circuits of the three 6D6 I.F. amplifier tubes. A fourth transformer, directly behind the first three, couples the output of the third I.F. tube to the control grid of the 6B7 second detector. A small coupling coil closely coupled to its plate or primary coil serves as AVC pick-up.

Since the pentode section of the 6B7 second detector amplifies at intermediate frequency, it really constitutes a fourth I.F. stage. Its plate circuit is coupled back to its diode plates by means of a fifth single tuned transformer.

Altogether, the I.F. amplifier has nine tuned circuits; four pairs and one single. Three of the pairs may have their coupling continuously varied by a panel control (except in crystal models), while the coupling of the remaining pair is fixed.

All the intermediate transformers, AVC transformers, and the Beat Oscillator circuit are tuned by means of air-dielectric variable condensers of special design. This insures stability of both gain and selectivity, even under adverse atmospheric conditions.

The A.V.C. System used is of the amplified and delayed type using a 6B7 as both amplifier and rectifier. A single tuned circuit link coupled to the primary circuit of the fourth I.F. transformer feeds its control grid. The amplified signal voltage from its plate circuit is fed back to its diode plates. The A.V.C. output transformer is an exact duplicate of the second detector output transformer. The delayed action is accomplished by normally maintaining a no-signal bias on the diode plates of the 6B7 of approximately minus 40 volts.

The Beat Oscillator is a type 6C6 electron-coupled to the output of the second detector through a small capacitor. The tuned circuit of the beat oscillator is housed in a shield similar to those housing the I.F. transformers. In

addition to its main tuning condenser which is adjustable by means of a screw driver, there is a three plate vernier condenser connected in parallel and mounted in the upper part of the shield. The setting of this vernier condenser is continuously variable from the panel by means of an extension shaft and knob. In this way the pitch of a C.W. telegraph signal can be varied without detuning the signal.

AUDIO SYSTEM

The audio component of the 6B7 second detector diode circuit is capacitively coupled to the A.F. gain control which is a 100,000 ohm tapered potentiometer in the grid circuit of the type 6C5 first stage audio-frequency amplifier tube. This first A.F. stage is resistance-capacity coupled to the grid of the driver stage which is a type 6F6 operated as a class A triode. The output stage is transformer coupled to the 6F6 driver, and consists of a pair of type 6F6 connected as triodes and operated Class AB. The output transformer matches the plate circuit of these output tubes to a 600 ohm Line and has an 8000 ohm winding for headphones. (Fig. 9)

CRYSTAL FILTER

The crystal filter provides not only extreme selectivity for C.W. telegraph reception, but when properly adjusted, also affords added selectivity for voice and other modulated signals.

The crystal holder itself is an isolantite block ground on both sides to insure an accurate and uniform air gap above the upper surface of the crystal. It is connected in a balanced link circuit coupling the plate circuit of the first detector to the grid circuit of the first I.F. tube. This link circuit has a relatively low impedance to match the series resistance (at resonance) of the crystal. In the other leg of the balanced line circuit a variable condenser serves to neutralize the capacitance of the crystal and its holder. The insulated shaft of this variable condenser extends through the front panel

where a knob and pointer together with engraved scale permit accurate adjustment to suit various operating requirements.

Maximum selectivity, suitable for single side-band C.W. telegraph reception occurs at or very near the point of exact neutralization. This point will in general be found at approximately between 1 and 2 on the scale, but will vary slightly in different receivers. Once found for any single receiver, it will remain unchanged unless a new crystal is substituted. Directly on either side of the point of exact neutralization occur points of maximum attenuation for interfering frequencies differing by an audio amount from the desired signal. Turning the knob toward 10 on the scale continuously widens the band passed by the filter to such an extent that successful voice communication can frequently be had under conditions of interference that render reception impossible without the filter.

The filter is very accessible, being located between the front panel and the first intermediate frequency transformer. By removing the two screws which hold the top plate of the holder, the crystal can be removed for inspection. Inasmuch as the clearance between the crystal and the top plate of the holder is but .003" great care should be exercised in replacing it, since any foreign matter between crystal and plate may render the filter inoperative.

RELAY TERMINALS

The relay terminals at rear of receiver chassis are for convenience for connecting a relay to automatically disconnect the receiver in preference to operating the Manual-Send-Receive Switch.

INSTALLATION

EQUIPMENT

The "Super Pro" receiver is furnished as a complete unit consisting of the Receiver, Power Supply, and the following R.C.A. tubes:-

1 - 6J7 - High Frequency Oscillator
2 - 6K7 - R.F. Amplifiers
3 - 6D6 - I.F. Amplifiers
1 - 6L7 - First Detector
1 - 6C6 - Beat-Oscillator
2 - 6B7 - Second detector and A.V.C.
1 - 6C5 - First A.F. Amplifier
3 - 6F6 - Driver and Class AB output
1 - 5Z3 - Plate voltage rectifier
1 - 80 - Grid bias rectifier

The only additional equipment required to complete the installation of the "Super Pro" is the Antenna System. It is assumed that the proper source of power is available. A connecting cable is furnished for connecting the receiver and power supply terminals. (Fig. 11)

If at any time emergency battery operation is desired, a special connecting cable can be supplied. (Fig. 12)

One end of this cable has a terminal strip that connects to the receiver and the other end has color coded wires for battery connections. The following batteries are required for emergency operation:-

5 - 45 volt "B" batteries
1 - 45 volt "C" battery
1 - 6 volt "A" storage battery

ANTENNA

The Antenna plays a leading part in all good ALL-WAVE reception. A most uniformly successful means for intercepting signals on all bands is a special Antenna System consisting of two V type doublet Antennae of equal length, connected through the medium of a resonating transformer.

The input circuit of the "Super Pro" has been designed to connect directly to a balanced transmission line having an impedance of the order of 115 ohms. The ordinary twisted pair lead-in wire, generally supplied with doublet antenna systems, has such an impedance. Although some antenna kits are provided with a matching transformer to connect between the lead-in and the receiver, the use of such a transformer is neither necessary nor <u>desirable</u> with the "Super Pro". If a single wire type of antenna is used, the lead-in should be connected to one of the terminals marked "A" and the other "A" terminal connected to a good ground. It is not essential to ground the receiver chassis, but it may readily be accomplished by inserting a ground lead under one of the thumb screws holding the dust cover in place at the rear of the receiver.

PRELIMINARY PROCEDURE

Before attempting to install the receiver, remove the cover for inspection. See that all tubes are firmly in their prcper sockets and all grid leads and tube shields firmly in place, after which the cover can be replaced. Inspect the power supply unit in the same manner.

CONNECTING COMPLETE EQUIPMENT

Connect complete equipment as illustrated in figure (11), making certain to have the cable spade lugs pointing downward, both at the receiver and power unit. Both ends of the connecting cable are alike. Next the antenna may be connected to the terminals A-A located at the rear of the tuning unit.

With the "Off-On" switch in the OFF position, plug the power supply cord in the 115 volt, (50-60) cycle alternating current supply line. DO NOT ATTEMPT TO OPERATE ON DIRECT CURRENT -- OR ALTERNATING CURRENT OTHER THAN (50-60) CYCLES OF THE PROPER VOLTAGE, unless the power supply unit is marked for some

other voltage or frequency. Inasmuch as the line voltage is frequently higher or lower than the normal of 115 volts, the transformer in the power supply unit has been provided with taps to compensate for such differences. These taps are brought to a three terminal connection strip mounted under the power supply chassis, and marked 105, 115, and 125. It is advisable to determine the actual line voltage at the proper outlet and adjust the power supply to the appropriate tap. Although the power unit plug should never be attached to any but the proper sources of supply, a protective two ampere fuse is mounted on the power supply chassis to care for such eventualities, as well as a breakdown in the power unit or receiver. If this fuse must be replaced, be certain to use a 2 AMPERE RATING ONLY.

OPERATION

CLASSIFICATION OF OPERATING CONTROLS

The receiver is equipped with all necessary controls to insure maximum performance under a wide variety of receiving conditions. Many of the knobs and switches are set or adjusted once for a given type of service, and thereafter ignored. At the outset, it is important to divide the various controls into two classifications. These will hereafter be referred to as operating controls and, for want of a better name, "set-up" controls. Briefly, the set-up controls are those used to prepare the receiver for a definite type of service. Thereafter, the operating controls only are used until a different type of service is required.

In general, this classification of controls may be made as following:-

SET-UP CONTROLS

"Off-on" Switch

Band Change Switch

"CW-Mod" Switch

Beat Oscillator Control

"AVC-Manual" Switch

Audio Gain (except when operating on "AVC")

Main Tuning (when Band-Spread is being used)

Band-Width

"Send-Receive" Switch (except when using transmitter)

OPERATING CONTROLS

Main Tuning (from 100 to 400 kc. and at other frequencies when Band-Spread is not being used)

Band Spread (from 2.5 to 20.0 mc. if desired)

Audio Gain (when operating on "AVC")

Sensitivity (when operating on "Manual")

CORRECT OPERATING PROCEDURE

From the above lists it will be evident that operation is relatively simple after the receiver has been adjusted for the desired service. To illustrate, one example is given as follows:-

Desired Service - C.W. Telegraph at 14.0 mc.

Set "Off-on" switch to "On" position

Band Change Switch to 10.0 - 20.0 mc.

"CW-Mod" Switch to "CW" position

Beat Oscillator Control to appropriate tone

"AVC-Manual" Switch to "Manual"

Audio Gain on Full

Main Tuning to 14.4 mc. (will be explained later)

Band-Width on 3 (extreme counter-clock-wise)

This leaves the following as "Operating Controls".

Band Spread Dial

Sensitivity Control

"Send-Receive" Switch, (if transmitter is being used). To change over to 'phone reception in the same band, the "CW-Mod" switch should be thrown to "Mod" and perhaps the Band-Width control altered to suit.

There are two gain controls, namely Sensitivity and A.F. To avoid confusion, until the operator becomes thoroughly familiar with the receiver, the following rules should be observed.

<u>Sensitivity</u> - This is the control normally used for regulating output volume when the "AVC-Manual" switch is set on "Manual". When operating the "AVC"

the Sensitivity control performs an additional function. Its setting then limits the gain of the receiver when no carrier is present to actuate the "AVC" system. If turned full on the sensitivity of the receiver will rise to its ultimate value whenever no carrier is tuned in. In most locations, this would result in entirely too much noise. In fact, an excellent way to adjust this control when operating on "AVC" is to tune between carriers and adjust this control for the desired sensitivity as estimated from the noise output of the head phones.

Audio Gain - This should generally be turned full on when operating on "Manual". If this is not done it is sure to be forgotten and sooner or later the second detector will be overloaded when attempting to secure high volume from the loud speaker by advancing the Sensitivity control. When operating on A.V.C. the situation is entirely different. Then the signal is held substantially constant at the second detector and the audio gain control provides the only means of regulating the output.

Band Spread Tuning - The Band Spread dial operates on the three high-frequency bands from 2.5 to 20.0 mc. Below 2.5 mc. it is automatically disconnected by the band change switch. The calibration of the main dial is based on a Band Spread dial setting of 100. Decreasing the setting of the Band Spread dial decreases the resonant frequency of the receiver. Band spread may therefore be obtained by setting the Main Tuning dial to the highest frequency in the desired band. When this has been done the lower frequencies in the band may be tuned by means of the Band Spread dial only.

When the appropriate setting of the Main Tuning Dial for a given band has been ascertained, the desired stations may be logged on the Band Spread Dial Thereafter, the settings may be duplicated by identifying any one of the logged stations and making the necessary slight correction of the main dial setting to cause the identified station to tune at the previously logged setting of the Band Spread dial.

Tuning Meter - The meter in the center of the panel may be used as a tuning meter when operating on A.V.C. It will show a dip as each carrier is tuned in and the amount of the dip is an appropriate indication of carrier strength. When operating on "Manual" the meter indicates the relative Sensitivity, since increasing the setting of the Sensitivity control results in higher meter readings.

MAINTENANCE INSTRUCTIONS

GENERAL

The receiver has been carefully inspected and adjusted and servicing is not generally necessary over long periods of operation. Vacuum tubes should be tested at regular intervals and those indicating low sensitivity should be replaced. All adjustments originally were made with R.C.A. tubes and it is strongly recommended that the same type tubes be used for replacement purposes.

If the receiver becomes completely inoperative, it may be due to a shorted filter or by-pass condenser or an open resistor. By measuring voltages and comparing them with the tabulations in the chart, the defective parts can be easily determined. We do not believe that detailed continuity tests should be described since most operators are familiar with the ordinary procedure for determining defective component parts. In both receiver and power supply units, the bottom cover plates may be removed so that all parts are accessible. Values of any resistor or capacitor may be obtained by locating the number on the schematic wiring diagram, and referring to the parts list.

ALIGNMENT

The receiver has been accurately aligned at the factory and under normal operating conditions, should retain this adjustment indefinitely. When replacing tubes or making periodical inspections, it may be desirable to check the alignment. Removing the dust cover and bottom cover plate of the receiver, will make all adjustment easily accessible. The many tuned circuits requiring adjustment may make the alignment procedure appear complicated but if the following instructions are carefully carried out, no difficulty should be experienced in obtaining the optimum performance of the receiver. **CAUTION** – Any changes in re-alignment from original setting will be relatively small and extreme care should be exercised when checking adjustments. This is especially true of the H.F. Oscillator circuits S,T,W,X, and Y. Do not manipulate the insulated screw driver indiscriminately.

EQUIPMENT REQUIRED

1 - TEST OSCILLATOR

An accurately calibrated instrument producing modulated signals covering a range of 100 K.C. - 20 M.C. This test oscillator should have an output of the order of 100 micro-volts and an output impedance of 100 Ohms for best results when aligning the R.F. and H.F. Oscillator circuits. For I.F. alignment these values are not critical. The frequency calibration of the test oscillator is extremely important, if the receiver alignment is to be correct.

2 - OUTPUT METER

This meter should respond to the modulation frequency of the test oscillator and should provide at least half-scale deflection for one volt.

3 - INSULATED SCREW DRIVER

(9/64" wide - .025" thick at bit)

PRELIMINARY PROCEDURE

Place the "ON-OFF" switch in the "ON" position and allow the receiver to warm up approximately one hour before beginning adjustments. Connect the output meter to the "PHONES" terminals located at the rear of the receiver chassis.

I.F. - A.V.C. - BEAT OSC. ALIGNMENT

Adjust the test oscillator to 465 K.C. and connect the output to the control grid of the 1st Detector tube (6L7) through a small fixed condenser. Front panel controls should be set as follows:

SENSITIVITY CONTROL ON 0

A.V.C. - MANUAL switch on "MANUAL"

C.W. - M O D. - switch on "MOD"

SEND-RECEIVE Switch on "RECEIVE"

BAND SWITCH on 100 K.C. - 20 M.C.

AUDIO GAIN CONTROL on 10

BAND-WIDTH on 3

BAND SPREAD DIAL set on 100

MAIN TUNING DIAL set near low frequency end of scale, being careful not to conflict with a powerful local signal. Adjust the Sensitivity control so that a reading of approximately one volt is obtained on the out-put meter. As the various circuits are adjusted for resonance reduce the Sensitivity control to prevent overloading. Adjust the two trimmer capacitors in each of the following coil assemblies for peak voltage readings on the output meter - A.A. - B.B. - C.C. - D.D. - E.E. Then adjust the trimmer capacitor on coil assembly G.G. to minimum (dip) reading on the output meter. Now reduce the A.F. gain to nearly zero and throw the A.V.C. switch to A.V.C. Then adjust the Sensitivity Control until the panel meter reads between 2 and 3. Then adjust the capacitor on H.H. for minimum panel meter reading. There should be a pronounced dip of the panel meter as this adjustment is made. It is advisable to switch over to speaker at frequent intervals during alignment to make sure there is no overloading. If everything is operating properly the output meter reading will also dip to minimum as the capacitor on coil assembly H.H. is adjusted.

Set the A.V.C.-MANUAL Switch on MANUAL, the C.W.-MOD-switch on C.W. and adjust the trimmer capacitor on coil assembly F.F. for zero beat. For this adjustment the Beat oscillator control knob, on the front panel should be adjusted to zero. This completes the alignment of the I.F. - A.V.C. and Beat Oscillator circuits all of which are accessible on top of the receiver chassis. After these adjustments have been made, the entire procedure should be repeated to insure accuracy.

CRYSTAL FILTER I.F. ALIGNMENT

The above procedure for aligning the I.F. circuit also applies to receivers with crystal filters, except that the test oscillator must be accurately set to the frequency of the crystal. This can be accomplished by setting the frequency of the test oscillator (when connected to the grid of the first detector) for maximum response with the crystal in circuit and the crystal selectivity control set at maximum. When the frequency of the test oscillator has been correctly adjusted to that of the crystal the I.F. circuits can be tuned as described above with the crystal cut out of circuit. Unless this procedure is carefully carried out, maximum crystal efficiency will not be obtained, since the peak of the I.F. selectivity curve must coincide exactly with the resonant peak of the crystal.

H.F. OSCILLATOR AND R.F. ALIGNMENT

Connect the output of the test oscillator to the "A.A." terminal strip. Keep the output meter in the same position as previous test. The controls on the front panel should be set as follows:

(1) - Band Change Switch on 100 - 200 K.C. (2) - Main Tuning Dial on 100 K.C. (3) - Band spread Dial on 100 (4) - Sensitivity Control "To Produce appropriate output meter reading" (5) - Audio Gain Control "Full On" (6) - C.W. - MOD switch on "MOD" (7) - A.V.C.-MANUAL Switch on "MANUAL" (8) - SEND - RECEIVE Switch on "RECEIVE"

Turn the receiver over, bottom side up, placing a small block of wood under the rear of the switch section to protect the shield cans and tubes. The main tuning unit bottom plate should remain in place while H.F. oscillator and R.F. adjustments are being made. In order to facilitate the alignment of these stages, we have indicated in dotted lines, the coil positions beneath the bottom cover plate, together with all capacity and inductance adjusters. Capacity adjusting condensers are located on the coil bases and inductance adjusters extend through the top of each coil. The coil markings correspond to the designations

on the schematic wiring diagram. Set the test oscillator to produce a 100 K.C. signal. Adjust the trimmer capacitor "Y" until a peak reading is obtained in the output meter. Now set the main tuning condenser dial to 200 K.C. and adjust the test oscillator for a 200 K.C. signal. Turn the inductance adjustment on coil "Y" for a peak reading on the output meter. As these two adjustments react on each other it will be necessary to repeat them until no further change in either capacity or inductance is necessary. This realignment should only be done after making sure that the calibration of main dial is incorrect.

Turn the main tuning dial to 200 K.C. and set the test oscillator for 200 K.C. signal. Adjust the capacitor on coil "E2" for peak reading on the output meter. The Sensitivity control should be adjusted so that no overloading occurs and an appropriate reading on the output meter is maintained. Now set the main tuning dial at 100 K.C. and the test oscillator on the same frequency and turn the "inductance adjustments" on coil "R" - "K" - "E1" for peak reading on the output meter. These adjustments are also interlocking and should be repeated until no further improvement can be noticed. This completes the H.F. Oscillator and R.F. coil alignment for the frequency range of 100 - 200 K.C.

The alignment procedure of the H.F. Oscillator and R.F. coils in the remaining frequency ranges is exactly the same as outlined for the 100 - 200 K.C. band. Test oscillator frequencies and main tuning dial settings vary as follows:

RANGE	CAPACITY ADJUSTING FREQUENCY	COILS	INDUCTANCE ADJUSTING FREQUENCY	COILS
200 to 400 K.C.	400 K.C.	X-P-J-D2	200 K.C.	X-P-J-D1
2.5 to 5.0 MC	5.0 MC	W-N-H-C2	2.5 MC	W-N-H-C1
5.0 to 10.0 MC	10.0 MC	T-M-G-B2	5.0 MC	T-M-G-B1
10.0 to 20.0 MC	20.0 MC	S-L-F-A2	10.0 MC	S-L-F-A1

The capacity and inductance adjustments in each band should be re-checked until no further peak changes are noted. The receiver will then be completely aligned. On the three highest frequency bands, care should be exercised to avoid adjusting the H.F. oscillator coils to an image frequency.

The check on the alignment of the receiver on all bands is now complete and if instructions have been carefully carried out optimum performance should be obtained.

"SUPER-PRO" PARTS LIST

Model SP-110 Series

(This parts list should be used to identify parts shown in the illustrations and schematic diagrams, and as an aid in ordering replacement parts.)

SCHEMATIC DESIGNATION	DESCRIPTION - RECEIVER PARTS		PART NUMBER
A1	Antenna Input Coil Assembly	10.0 to 20.0 m.c.	SA-46
A2	Antenna Output Coil Assembly	10.0 to 20.0 m.c.	SA-110
B1	Antenna Input Coil Assembly	5.0 to 10.0 m.c.	SA-47
B2	Antenna Output Coil Assembly	5.0 to 10.0 m.c.	SA-113
C1	Antenna Input Coil Assembly	2.5 to 5.0 m.c.	SA-48
C2	Antenna Output Coil Assembly	2.5 to 5.0 m.c.	SA-116
D1	Antenna Input Coil Assembly	200 to 400 k.c.	SA-161
D2	Antenna Output Coil Assembly	200 to 400 k.c.	SA-160
E1	Antenna Input Coil Assembly	100 to 200 k.c.	SA-162
E2	Antenna Output Coil Assembly	100 to 200 k.c.	SA-159
F	1st R.F. Coil Assembly	10.0 to 20.0 m.c.	SA-111
G	1st R.F. Coil Assembly	5.0 to 10.0 m.c.	SA-114
H	1st R.F. Coil Assembly	2.5 to 5.0 m.c.	SA-117
J	1st R.F. Coil Assembly	200 to 400 k.c.	SA-157
K	1st R.F. Coil Assembly	100 to 200 k.c.	SA-158
L	2nd R.F. Coil Assembly	10.0 to 20.0 m.c.	SA-111
M	2nd R.F. Coil Assembly	5.0 to 10.0 m.c.	SA-114
N	2nd R.F. Coil Assembly	2.5 to 5.0 m.c.	SA-117
P	2nd R.F. Coil Assembly	200 to 400 k.c.	SA-157
R	2nd R.F. Coil Assembly	100 to 200 k.c.	SA-158
S	High Frequency Osc. Coil Assembly	10.0 to 20.0 m.c.	SA-112
T	High Frequency Osc. Coil Assembly	5.0 to 10.0 m.c.	SA-115

SCHEMATIC DESIGNATION	DESCRIPTION - RECEIVER PARTS		PART NUMBER
W	High Frequency Osc. Coil Assembly 2.5 to 5.0 m.c.		SA-118
X	High Frequency Osc. Coil Assembly 200 to 400 k.c.		SA-155
Y	High Frequency Osc. Coil Assembly 100 to 200 k.c.		SA-156
AA	1st I.F. XTAL Coil Assembly		SA-84
BB	2nd I.F. Transformer Coil Assembly		SA-90
CC	3rd I.F. Transformer Coil Assembly		SA-90
DD	2nd Detector Input Coil Assembly		SA-91
EE	2nd Detector Output Coil Assembly		SA-92
FF	Beat Osc. Coil Assembly		SA-93
GG	A.V.C. Input Coil Assembly		SA-42
HH	A.V.C. Output Coil Assembly		SA-94
1	Antenna Terminal Strip		3842
2-12-22	Capacitor-Fixed Mica Type	600 mmf.	3989
28-34-47	Capacitor-Fixed Mica Type	100 mmf.	3929
4-14-24-44-61-69	Capacitor-Fixed Tubular Type	.01 mfd.-400 volts	3813
7-17-30-36-39-41-51-54-56-58-64-66-73-75-77-81-84-86-94-96-103-105	Capacitor-Fixed Tubular Type	.05 mfd.-400 volts	3817
108	Capacitor-Fixed Tubular Type	.05 mfd.-600 volts	4829
9-19-91	Capacitor-Fixed Tubular Type	.02 mfd.-400 volts	3815
46-128-129	Capacitor-Fixed Tubular Type	.25 mfd.-400 volts	3820
88	Capacitor-Fixed Mica Type	.003 mfd.	3902
98	Capacitor-Fixed Mica Type	7 mmf.	3996
101	Capacitor-Fixed Mica Type	50 mmf.	3994
114	Capacitor-Dry Electrolytic - 50 mfd. - 50 volts		3835
3-13-23-90-106-110-85	Resistor 500,000 ohms metallized 1/2 watt		3988

SCHEMATIC DESIGNATION	DESCRIPTION - RECEIVER PARTS	PART NUMBER
5-15-25-43-48-60-68-97	Resistor 100,000 ohms metallized 1/2 watt	3811
6-16-55-63-74-87-95	Resistor 10,000 ohms metallized 1/2 watt	4811
10-20-42-50-59-67-72-83-102	Resistor 5,000 ohms metallized 1 watt	3801
38	Resistor 5,000 ohms metallized 1/2 watt	4814
26-35-37	Resistor 50,000 ohms metallized 1/2 watt	3917
29	Resistor 25,000 ohms metallized 2 watts	3999
53-71-109	Resistor 50,000 ohms metallized 1 watt	3803
52-80	Resistor 60,000 ohms metallized 1 watt	3804
78	Resistor 400 ohms metallized 1 watt	4813
79-122	Resistor 3,000 ohms metallized 1 watt	3809
89	Resistor 1,000,000 ohms metallized 1/2 watt	3993
100	Resistor 400,000 ohms metallized 1/2 watt	3992
113	Resistor 750 ohms wire wound 10 watts	3836
62-118-119-120	Resistor 300 ohms metallized 1 watt	3806
121	Resistor 1,100 ohms metallized 1 watt	3808
8-18	Tube socket 6K7	4802
27	Tube socket 6L7	4803
40	Tube socket 6J7	4804
49	Tube socket 6C6	3823
57-65-76	Tube socket 6D6	3821
107	Tube socket 6C5	4805
82-99	Tube socket 6B7	3824
111-115-116	Tube socket 6F6	4806

SCHEMATIC DESIGNATION	DESCRIPTION - RECEIVER PARTS	PART NUMBER
70	Tuning Meter	3894
31	Send-Receive Switch	2988
32-33	Dial Lamps 6.3 volts	3920
45	CW-Mod. Switch	2991
92	Sensitivity Control	3891
93	A.V.C.-Manual Switch	2990
104	Audio Frequency Gain Control	4816
112	Push-pull Input Transformer	4827
117	Push-pull Output Transformer (600-8000 ohm)	3960
123	Phono Tip Jack	3849
124	Speaker-Voice Coil Terminal Strip	3843
125	Phone Jack	3892
126	Head Phone Tip Jack	3850
127	Off-On Switch	2983
131	Relay Tip Jack	4831
130	Connecting Terminal Strip	3838
132	Main Tuning Dial Indicator	SA-27
133	Band Spread Dial Indicator	SA-28
134	XTAL Holder Assembly	SA-85
	Speaker-Voice Coil Connecting Cable	SA-65
	Speaker-Field Coil Connecting Cable	SA-66
	Metal Dust Cover - Standard Model (Receiver)	2975
	Operating Knobs - Large	3856
	Operating Knobs - Small	3857
	Panel Cap Nuts	2951
	Dust Cover Thumb Screws	2952
	Connecting Cable	SA-35

SCHEMATIC DESIGNATION	DESCRIPTION - POWER SUPPLY PARTS	PART NUMBER
1	Power transformer 110 volts 60 cycle A.C.	4801
2	Filter Choke #1	2981
3	A.C. Input Cord and Plug	3900
4	Fuse Block	3859
5	Line Voltage Adjusting Strip	3858
6	Filter Choke #2	4819
7	Connecting Terminal Strip	3838
8-9-10	Filter Condenser 16 mfd. Electrolytic - 450 volts	3832
11	Filter Condenser 8-8-8 mfd. " - 450 volts	3834
12	Resistor 18,000 ohms	3997
13	Resistor 15,000 ohms	3998
14	Tube Socket 80	4807
15	Tube Socket 5Z3	3828

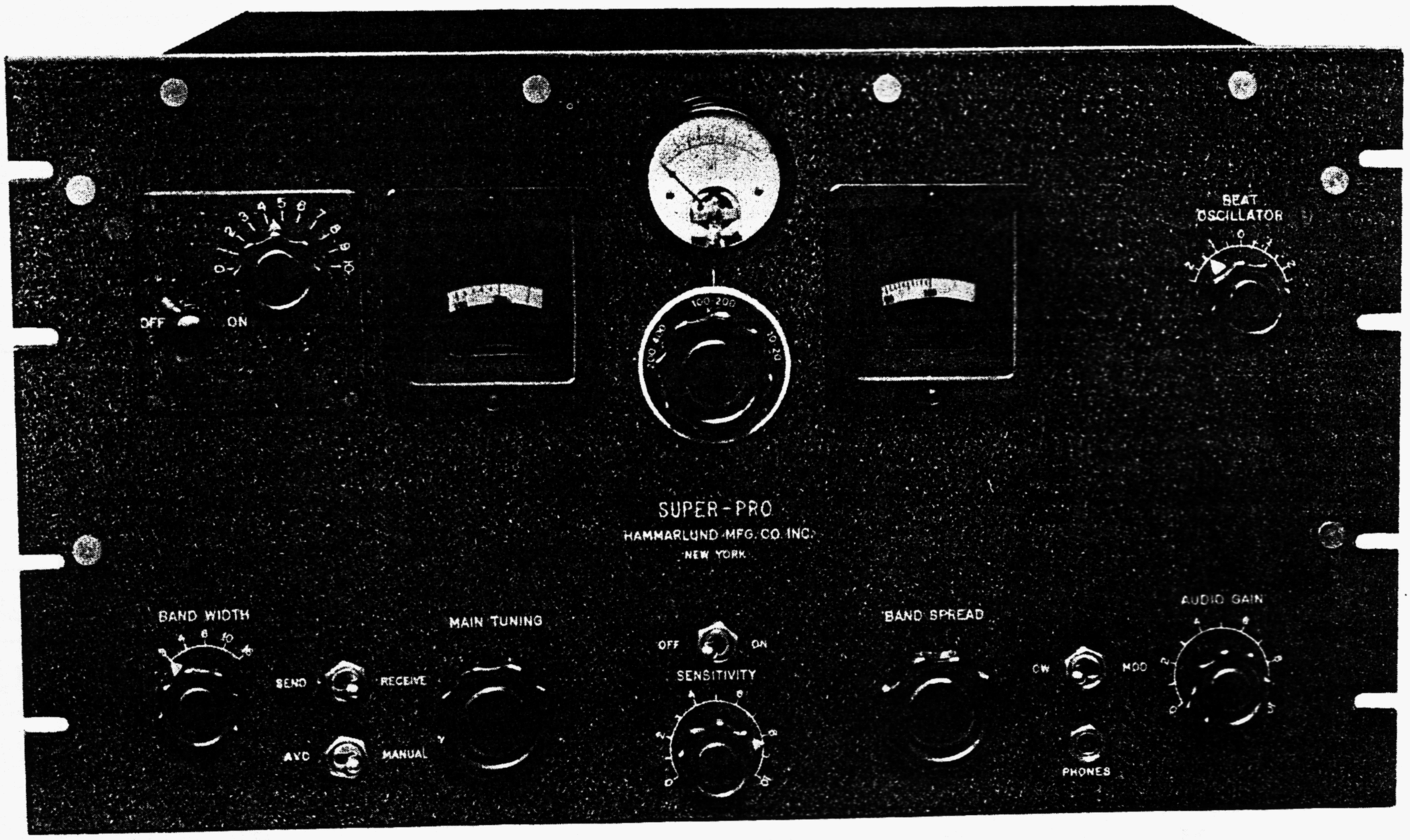
BEAT OSCILLATOR
OFF
ON
SUPER-PRO
HAMMARLUND MFG. CO. INC.
NEW YORK
BAND WIDTH
MAIN TUNING
SEND
RECEIVE
AVC
MANUAL
OFF
ON
SENSITIVITY
BAND SPREAD
CW
MOD
PHONES
AUDIO GAIN

FIG. 1

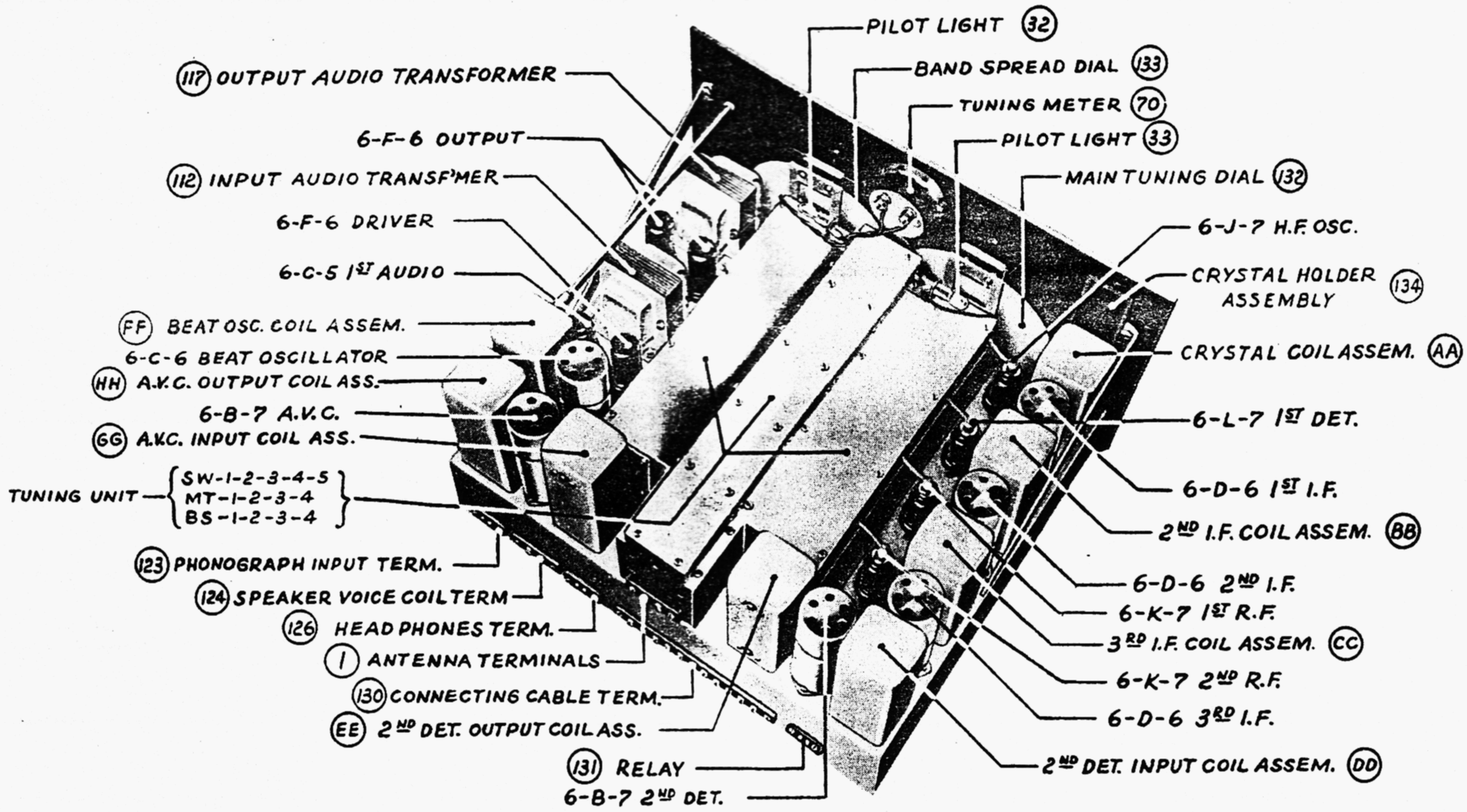
(117) OUTPUT AUDIO TRANSFORMER
6-F-6 OUTPUT
(112) INPUT AUDIO TRANSF'MER
6-F-6 DRIVER
6-C-5 1ST AUDIO
(FF) BEAT OSC. COIL ASSEM.
6-C-6 BEAT OSCILLATOR
(HH) A.V.C. OUTPUT COIL ASS.
6-B-7 A.V.C.
(GG) A.V.C. INPUT COIL ASS.
TUNING UNIT — SW-1-2-3-4-5 / MT-1-2-3-4 / BS-1-2-3-4
(123) PHONOGRAPH INPUT TERM.
(124) SPEAKER VOICE COIL TERM
(126) HEAD PHONES TERM.
(1) ANTENNA TERMINALS
(130) CONNECTING CABLE TERM.
(EE) 2ND DET. OUTPUT COIL ASS.
(131) RELAY
6-B-7 2ND DET.
PILOT LIGHT (32)
BAND SPREAD DIAL (133)
TUNING METER (70)
PILOT LIGHT (33)
MAIN TUNING DIAL (132)
6-J-7 H.F. OSC.
CRYSTAL HOLDER ASSEMBLY (134)
CRYSTAL COIL ASSEM. (AA)
6-L-7 1ST DET.
6-D-6 1ST I.F.
2ND I.F. COIL ASSEM. (BB)
6-D-6 2ND I.F.
6-K-7 1ST R.F.
3RD I.F. COIL ASSEM. (CC)
6-K-7 2ND R.F.
6-D-6 3RD I.F.
2ND DET. INPUT COIL ASSEM. (DD)

FIG. 2

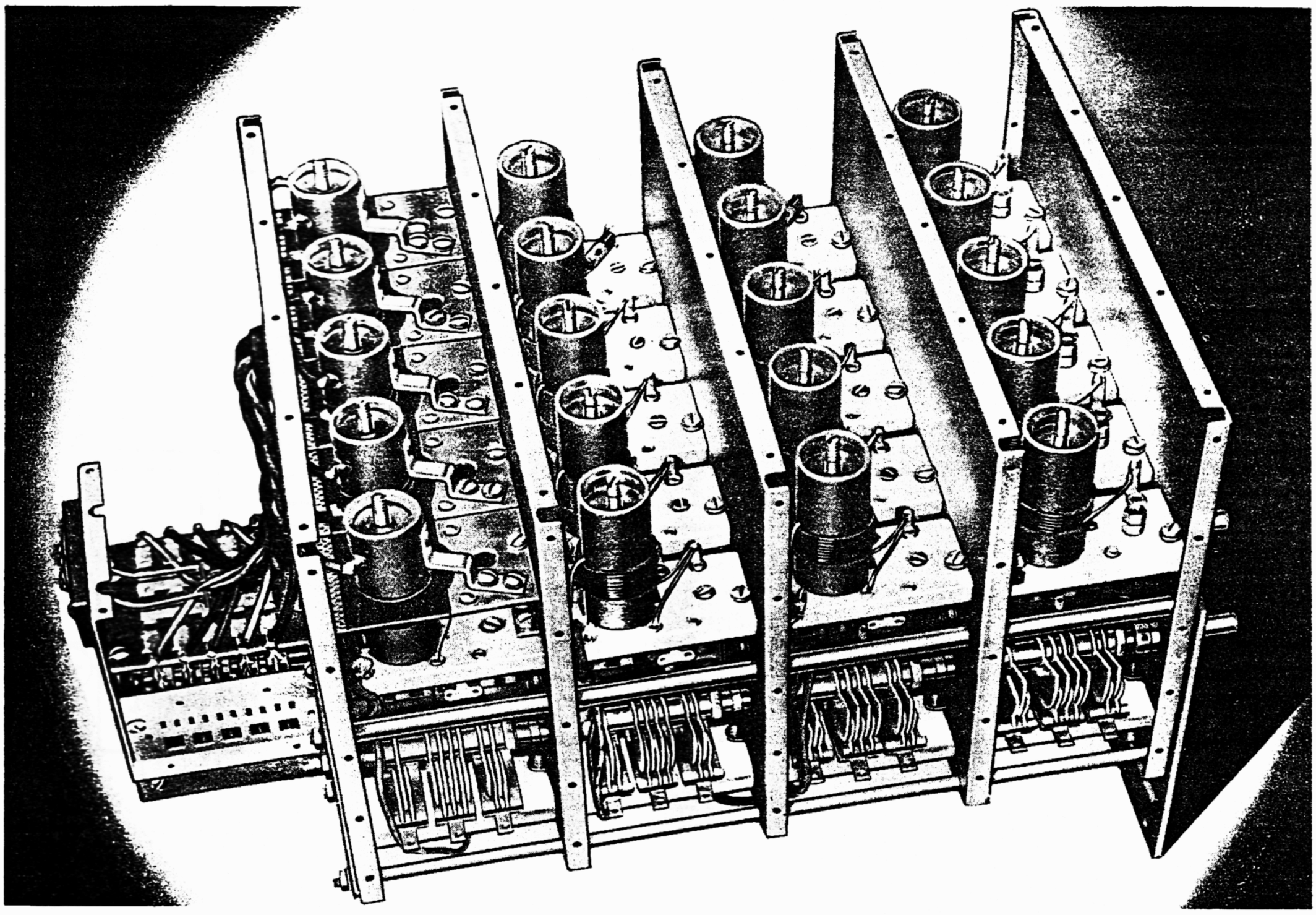

FIG. 3

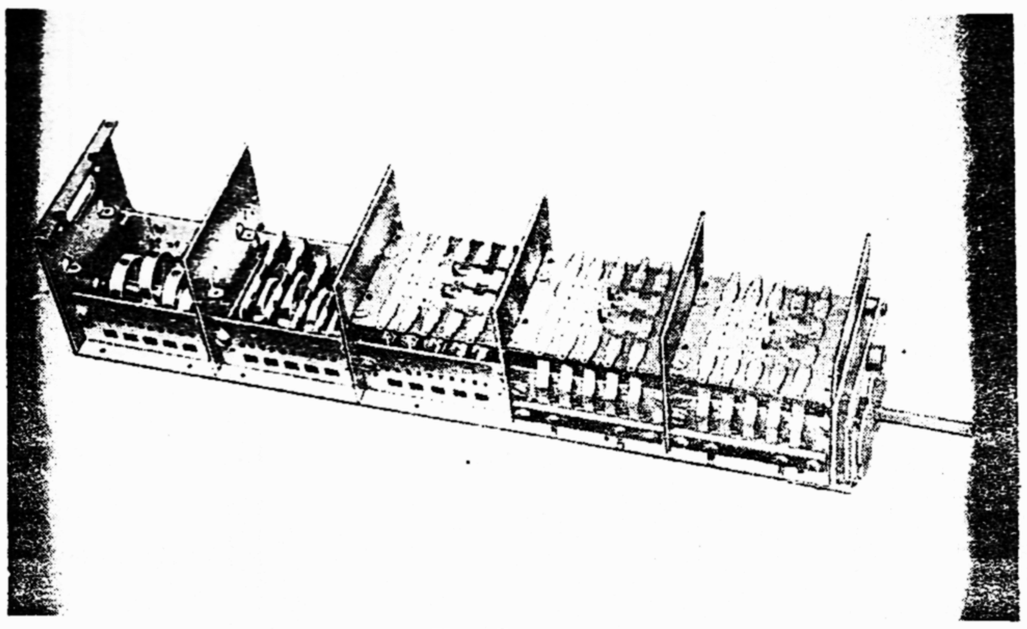

FIG. 4

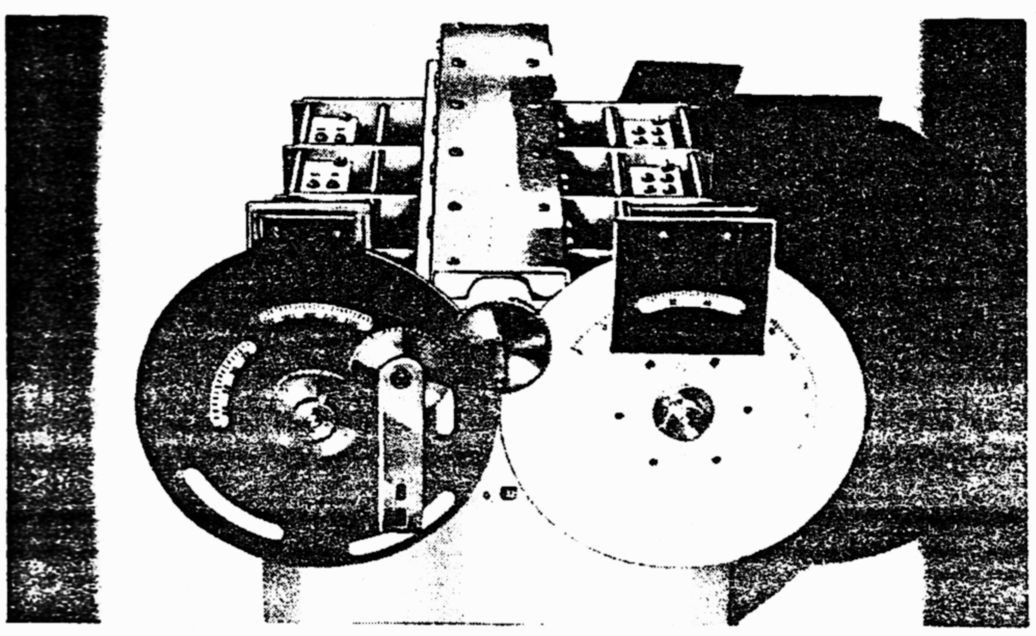

FIG. 6

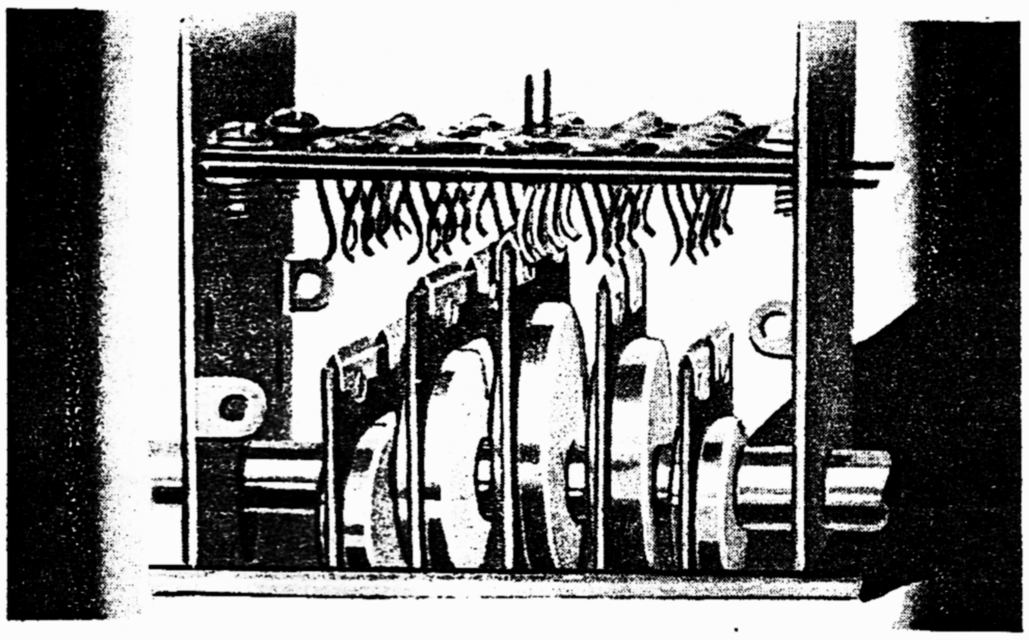

FIG. 5

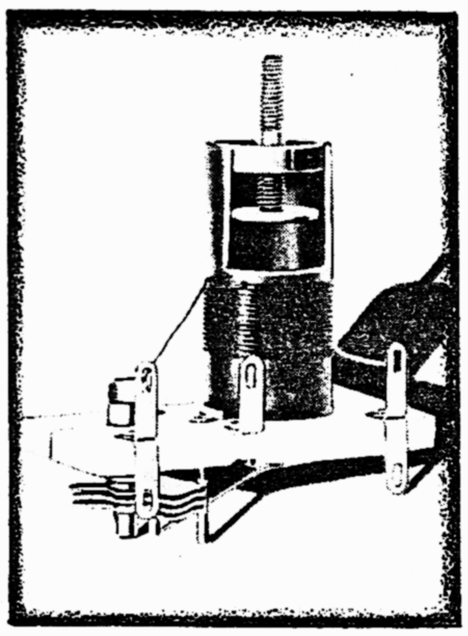

FIG. 7

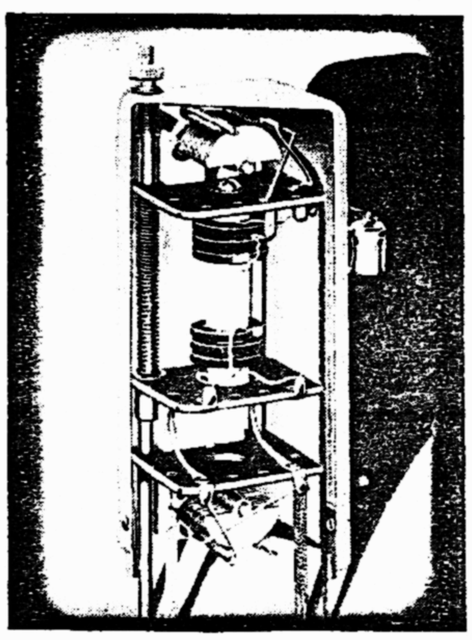

FIG. 8

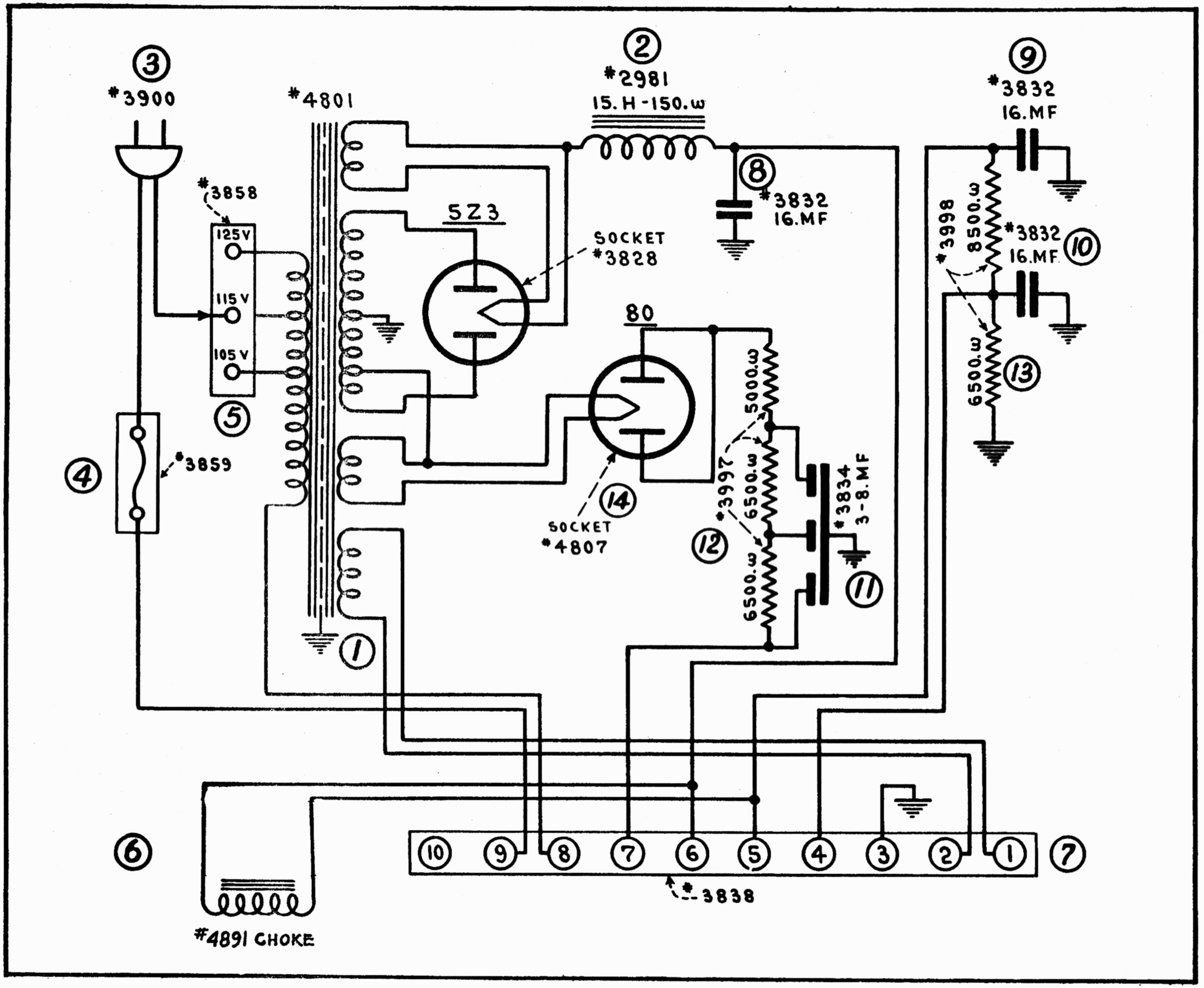
③
*3900
*4801
②
*2981
15. H - 150.ω
⑨
*3832
16. MF
*3858
125V
115V
105V
5Z3
SOCKET
*3828
⑧
*3832
16. MF
*3998
8500.ω
*3832
16. MF
⑩
80
5000.ω
6500.ω
⑬
⑤
④
*3859
⑭
SOCKET
*4807
*3997
6500.ω
*3834
3-8. MF
⑫
6500.ω
⑪
①
⑥
10 9 8 7 6 5 4 3 2 1
⑦
*3838
#4891 CHOKE

FIG. 10

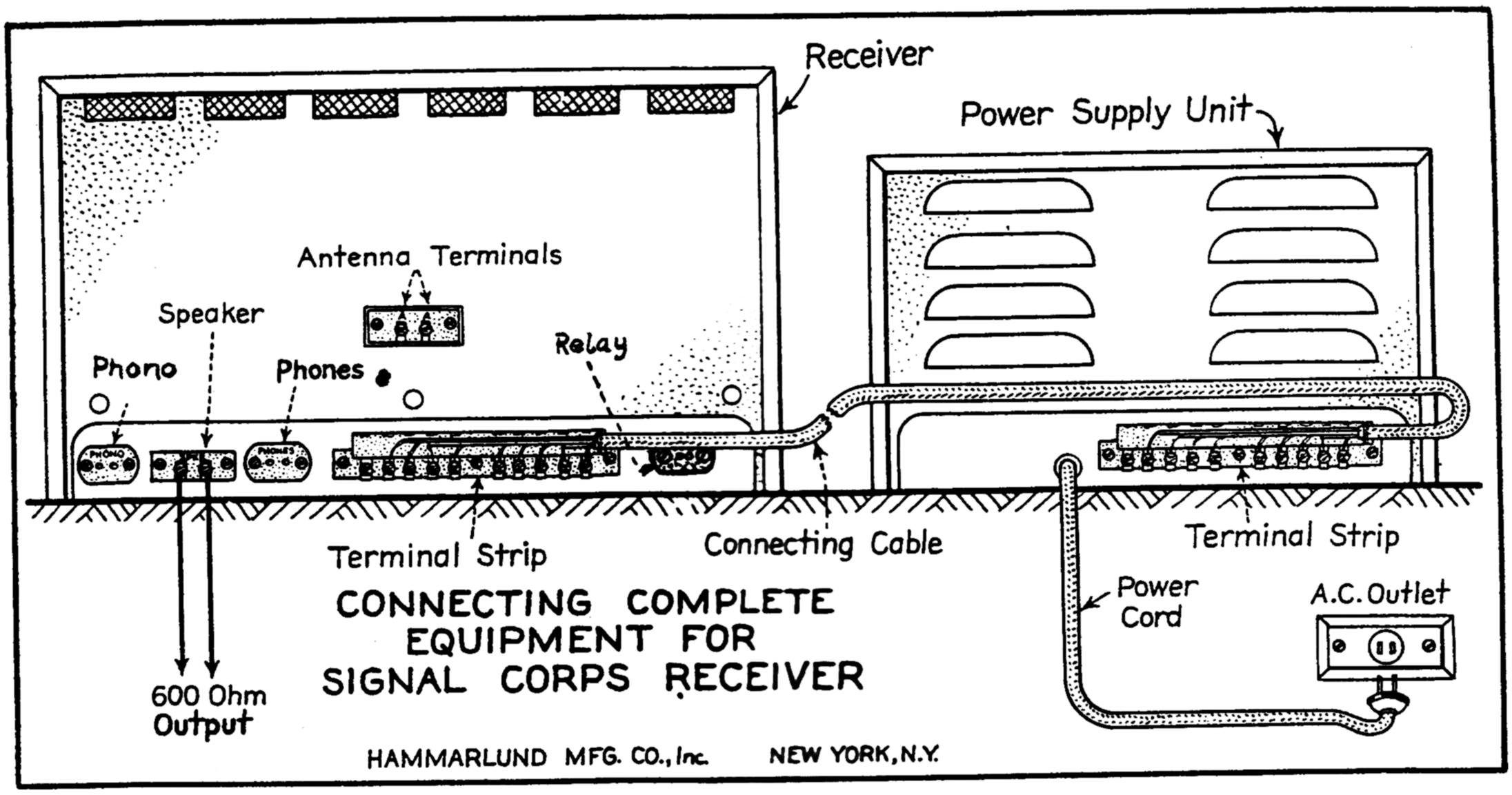
Receiver
Power Supply Unit
Antenna Terminals
Speaker
Phono
Phones
Relay
Terminal Strip
Connecting Cable
Terminal Strip
Power Cord
A.C. Outlet
600 Ohm Output
CONNECTING COMPLETE EQUIPMENT FOR SIGNAL CORPS RECEIVER
HAMMARLUND MFG. CO., Inc. NEW YORK, N.Y.

FIG. 11

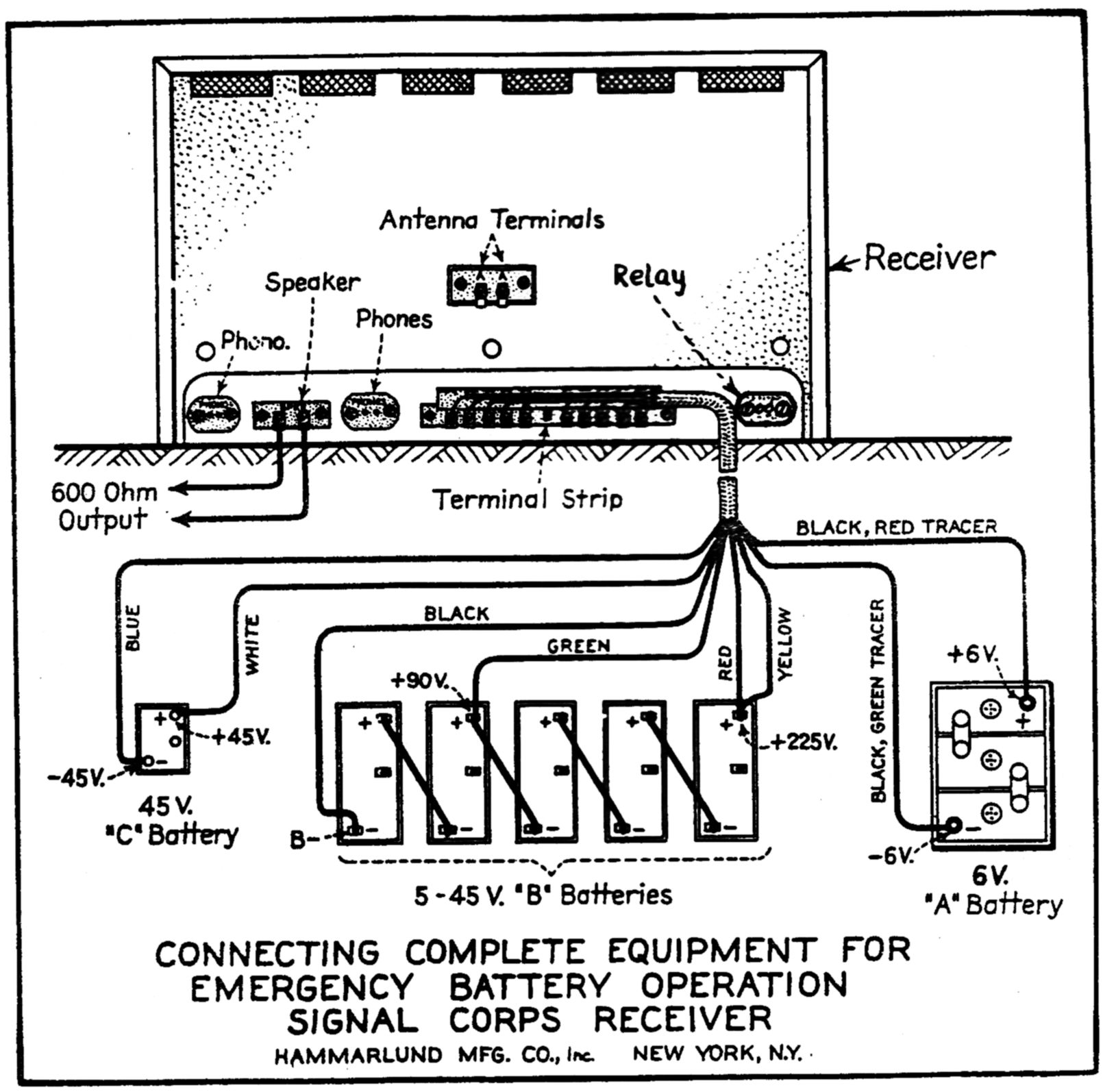
Antenna Terminals
Speaker
Phones
Phono.
Relay
Receiver
600 Ohm Output
Terminal Strip
BLACK, RED TRACER
BLUE
WHITE
BLACK
GREEN
RED
YELLOW
+90V.
+45V.
-45V.
45 V. "C" Battery
B-
+225V.
BLACK, GREEN TRACER
+6V.
-6V.
6V. "A" Battery
5 - 45 V. "B" Batteries
CONNECTING COMPLETE EQUIPMENT FOR EMERGENCY BATTERY OPERATION SIGNAL CORPS RECEIVER
HAMMARLUND MFG. CO., Inc. NEW YORK, N.Y.

FIG. 12

TABULATION OF VOLTAGES APPLIED TO RECEIVER TUBES

TUBE	FUNCTION IN RECEIVER	PLATE VOLTAGE	SCREEN VOLTAGE	CATHODE VOLTAGE
6 - L - 7	1st DETECTOR	240	100	0
6 - J - 7	HIGH FREQUENCY OSCILLATOR	225	150	0
6 - K - 7	1st RADIO FREQUENCY	250	100	0
6 - K - 7	2nd " "	250	110	0
6 - D - 6	1st INTERMEDIATE FREQUENCY	250	110	0
6 - D - 6	2nd " "	250	100	0
6 - D - 6	3rd " "	250	100	0
6 - B - 7	2nd DETECTOR	225	100	0
6 - B - 7	AUTOMATIC VOLUME CONTROL	230	140	30
6 - C - 6	BEAT OSCILLATOR	105	110	0
6 - C - 5	1st AUDIO	150	0	0
6 - F - 6	DRIVER	250	250	0
6 - F - 6	CLASS A. B. AUDIO	360	360	35
6 - F - 6	" " " "	360	360	35

VOLTAGES AT TERMINAL STRIP OF RECEIVER (Looking At Rear Of Chassis)

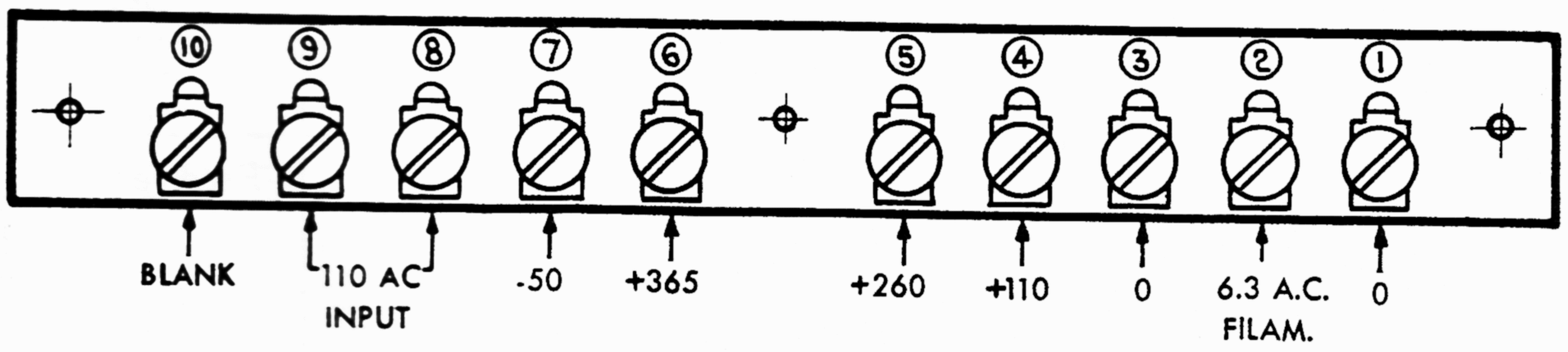

All measurements were made on a 120 volt A. C. power supply line with line voltage adjustment set at the 125 volt tap. Sensitivity and audio gain controls should be set at minimum. The A. V. C. Manual Switch should be in the manual position, the CW-MOD Switch in the C. W. position, and the "Send-Receive" switch in the receive position. D. C. voltage readings were obtained with a voltmeter having a resistance of 1000 OHMS per volt using the chassis as a common terminal. Voltages within ± 10% of the values given should be considered satisfactory. The 6.3 volt A. C. filament reading is obtained between chassis and terminal No. 2 on strip. Terminal No. 10 on strip is blank except when used for battery operation in which case it provides a short to chassis with power switch in "ON" position and open when power switch is in the "OFF" position.

Fig. 13

BOTTOM VIEW, MAIN TUNING UNIT, COVER PLATE IN PLACE, INDICATING H.F. OSCILLATOR AND R.F. COIL ADJUSTMENTS

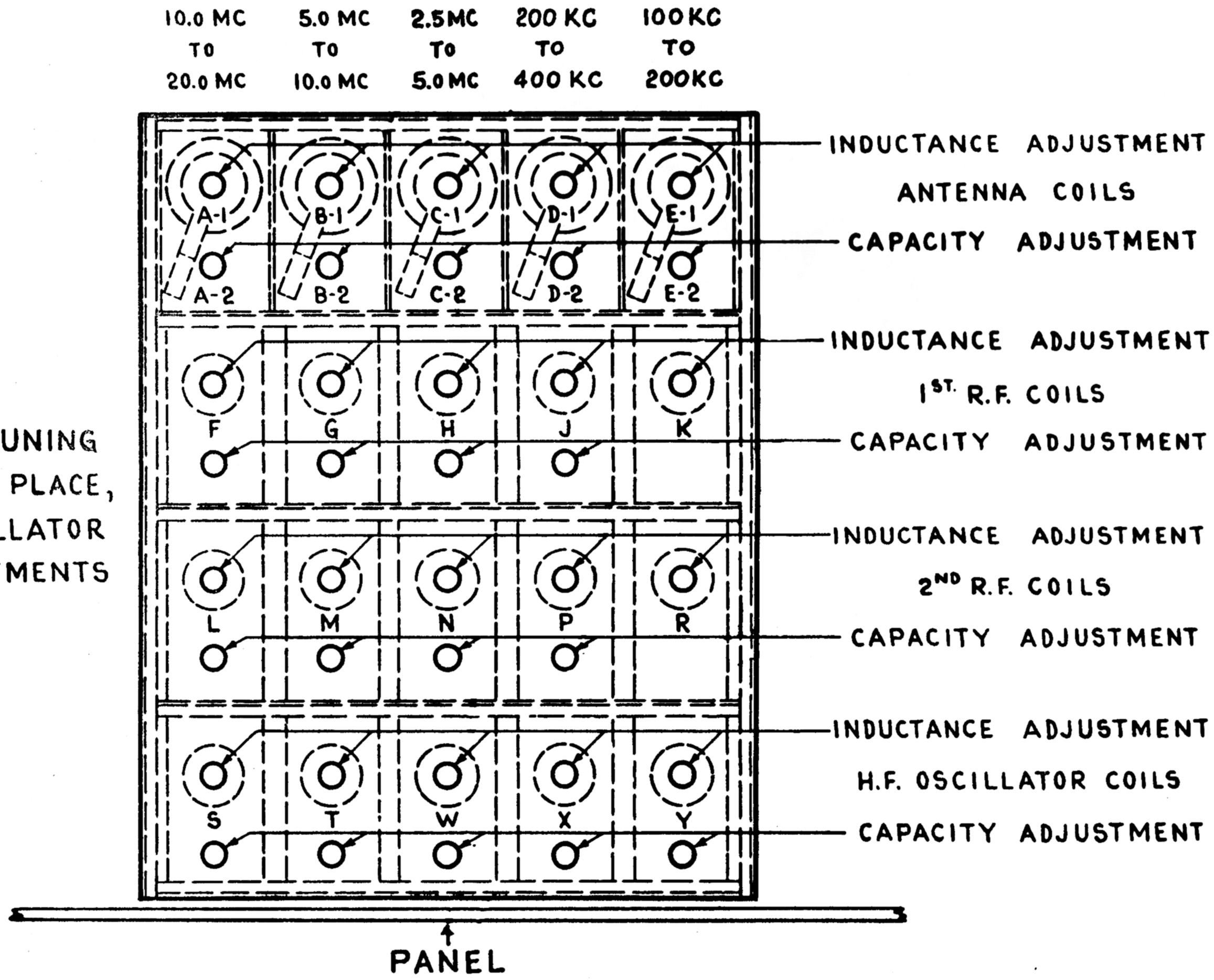

FIG. 14

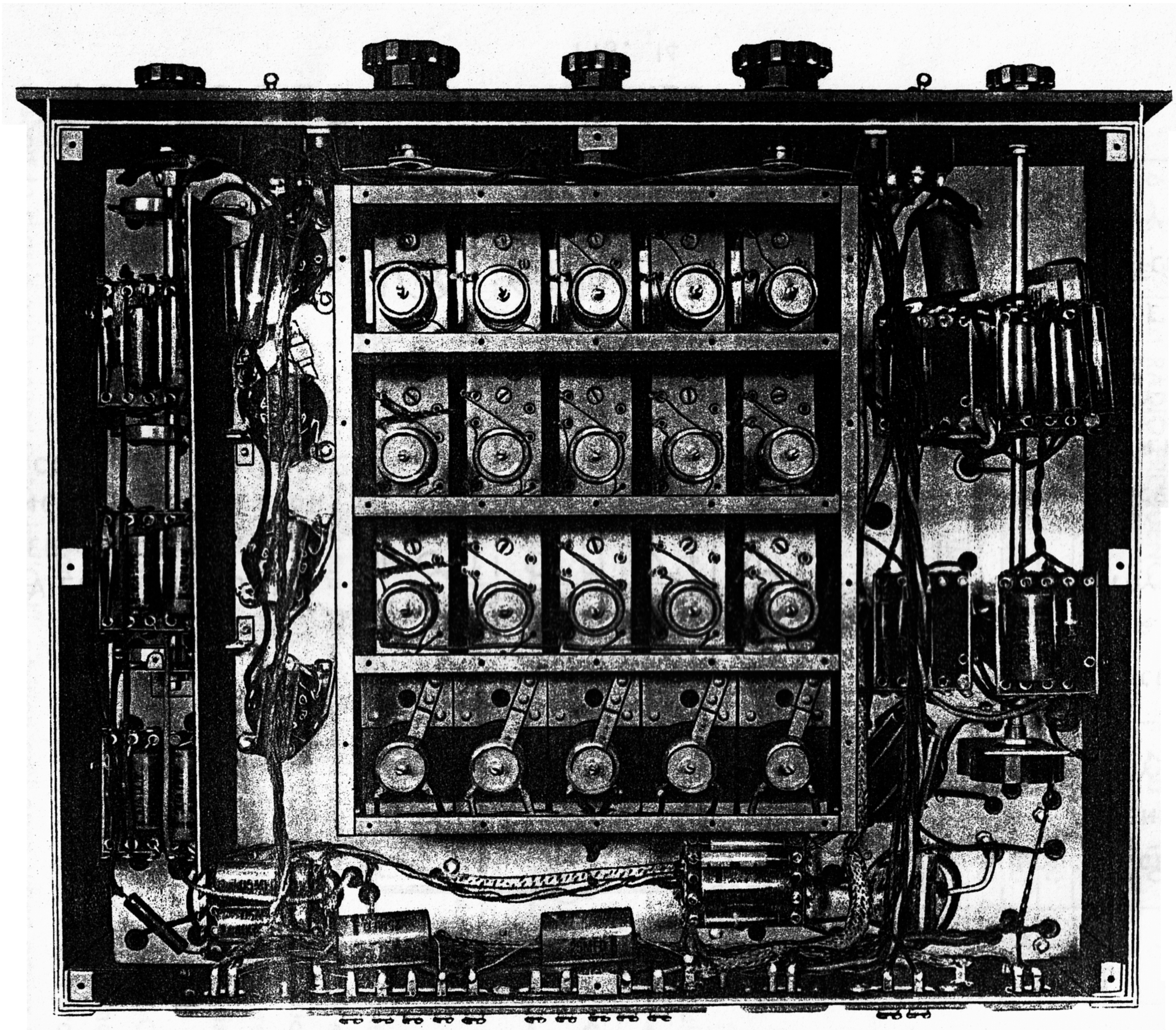

FIG. 15

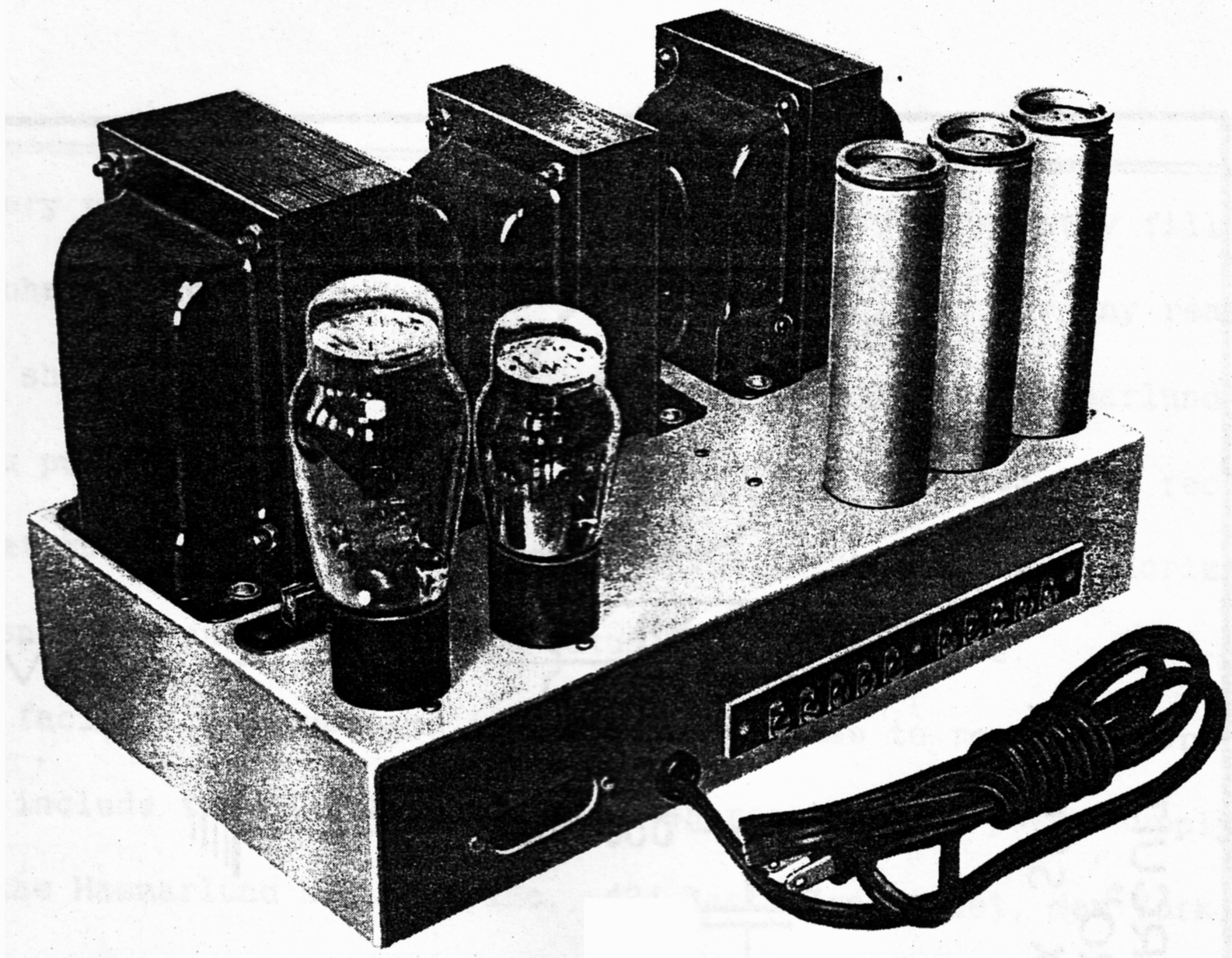

FIG. 16

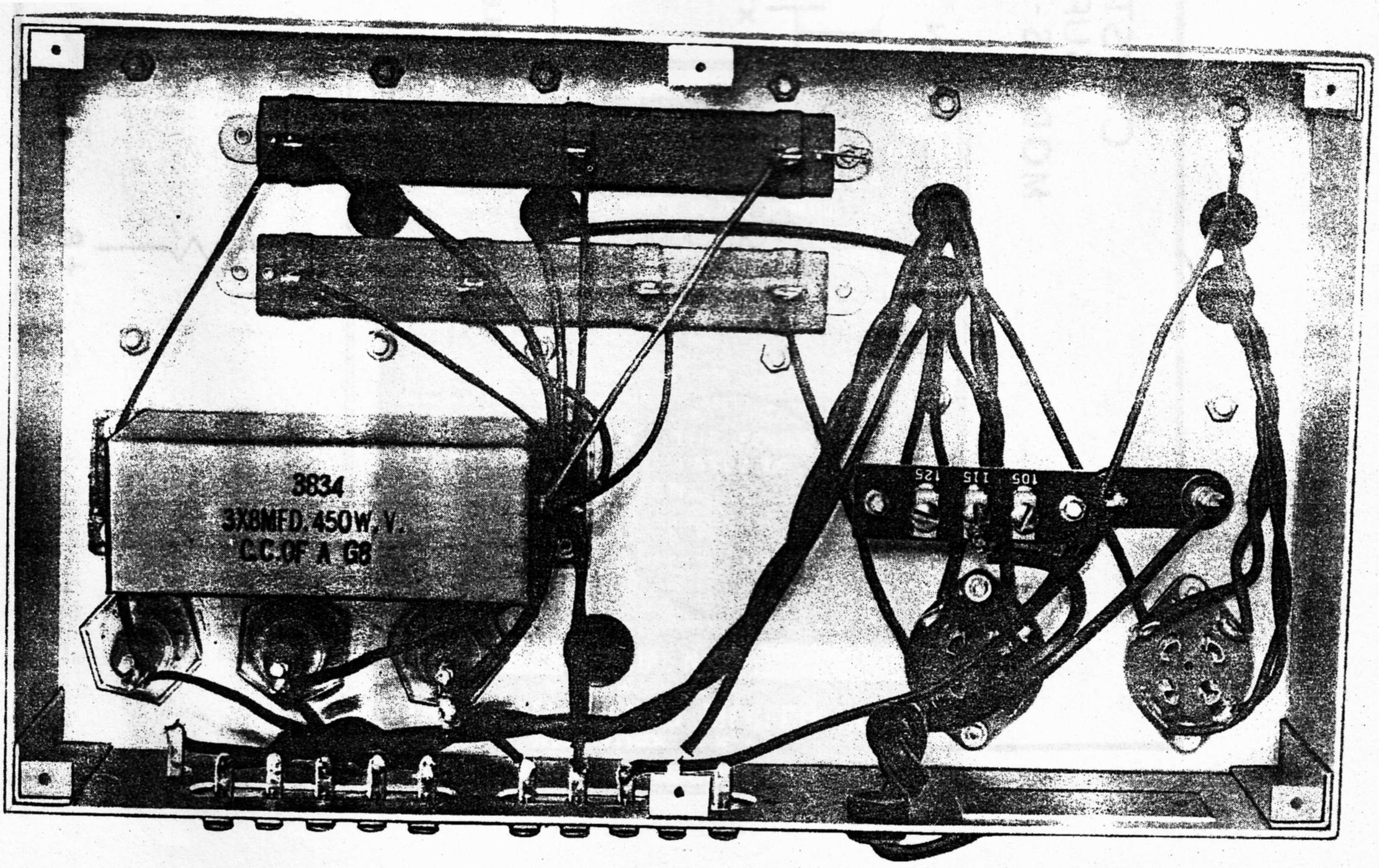

FIG. 17

CRYSTAL CIRCUIT
"SUPER PRO"
MODELS - SP110X - SP120X

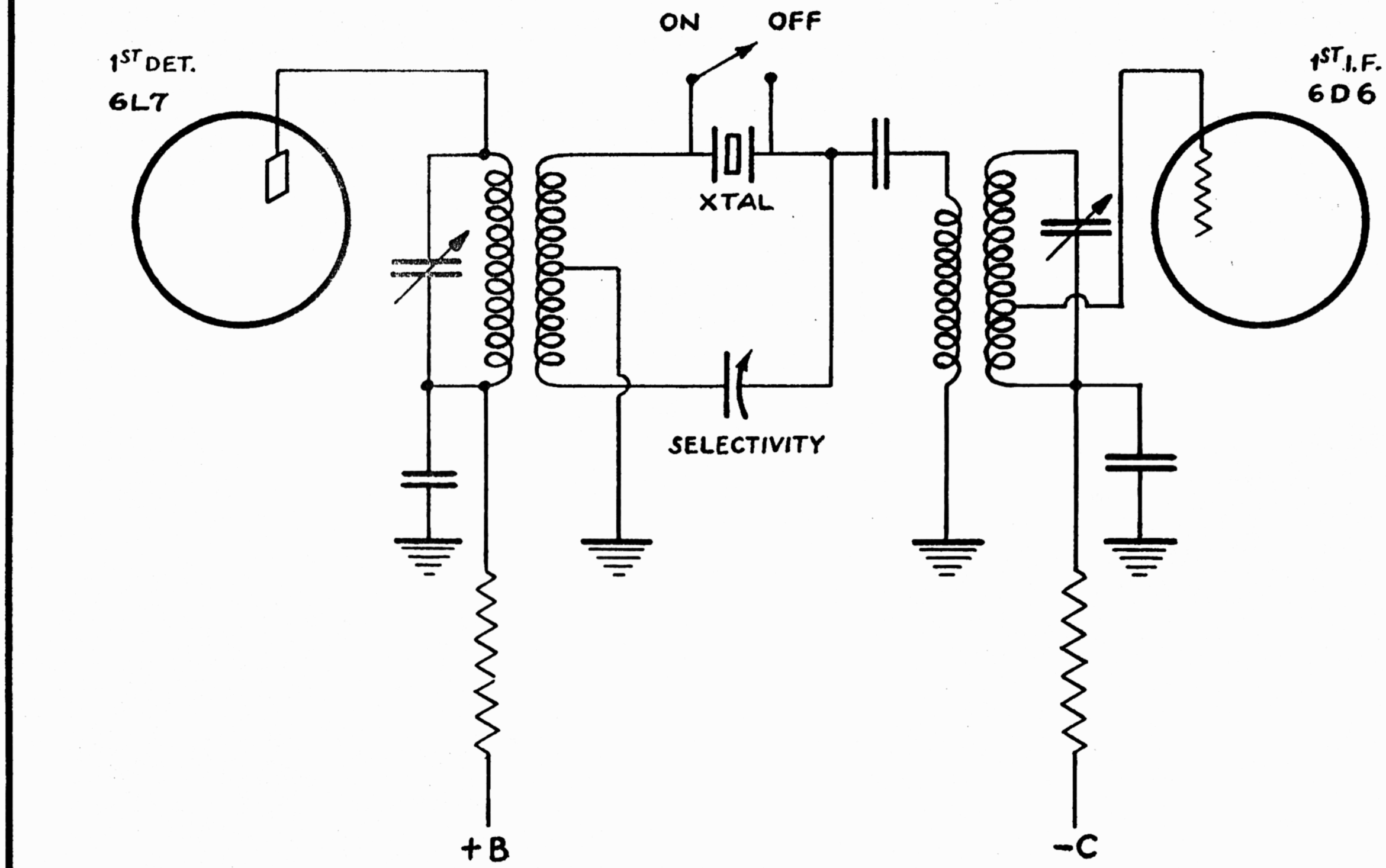

FIG. 18

Every purchaser of a "Super Pro" receiver should promptly fill out and mail the Purchase Record Card for their own protection. If, for any reason, the receiver should become inoperative, get in touch with the Hammarlund dealer from whom you purchased the instrument. Under no circumstances will receivers be accepted at our Factory for adjustment or repairs unless our authorization has first been given and a "Return Apparatus Tag" issued by us.

To facilitate prompt and intelligent response to requests for information, always include the serial numbers of both receiver and power supply chassis, and address the Hammarlund Mfg. Co. Inc., 424 West 33rd Street, New York City - Dept. J.

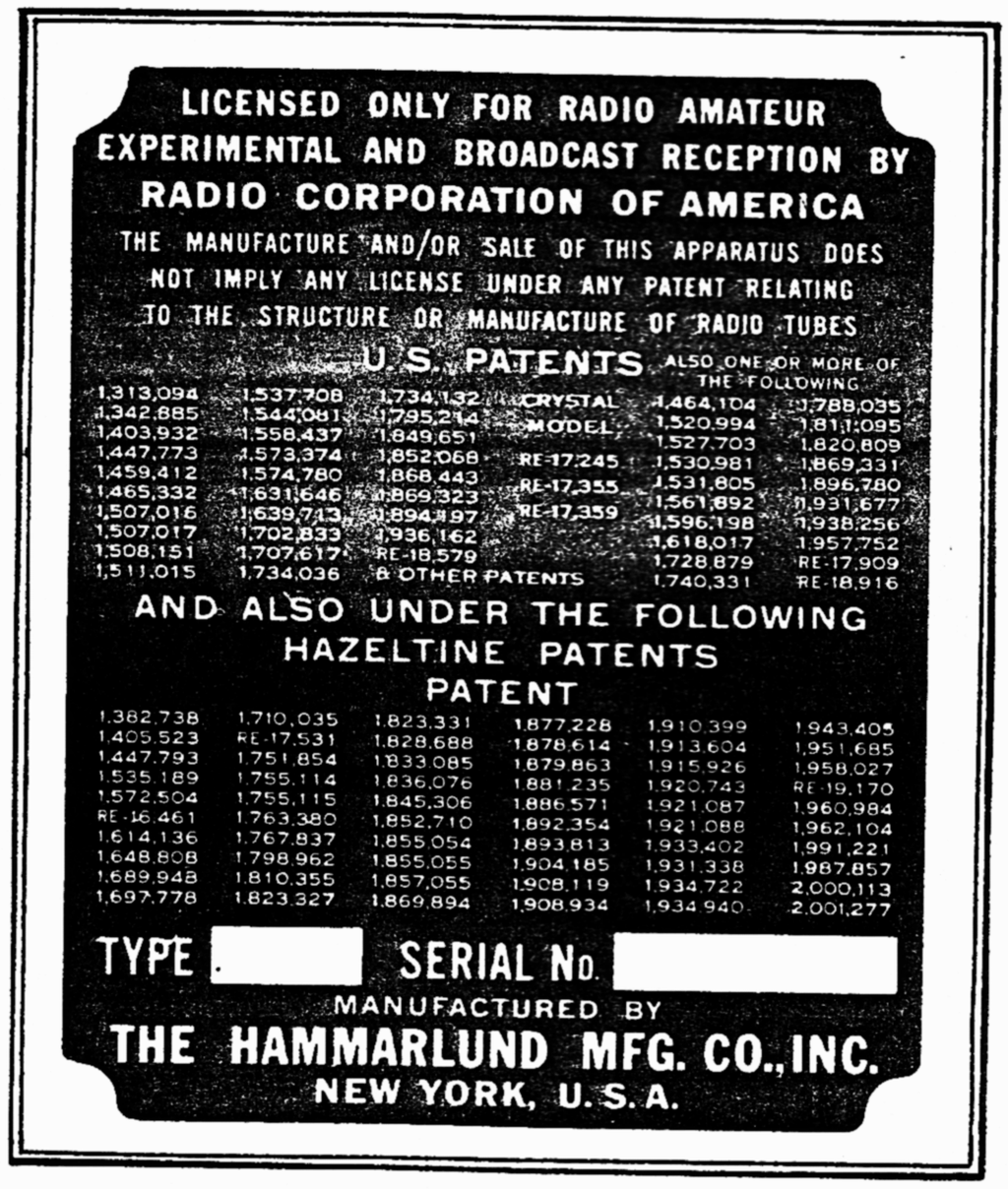

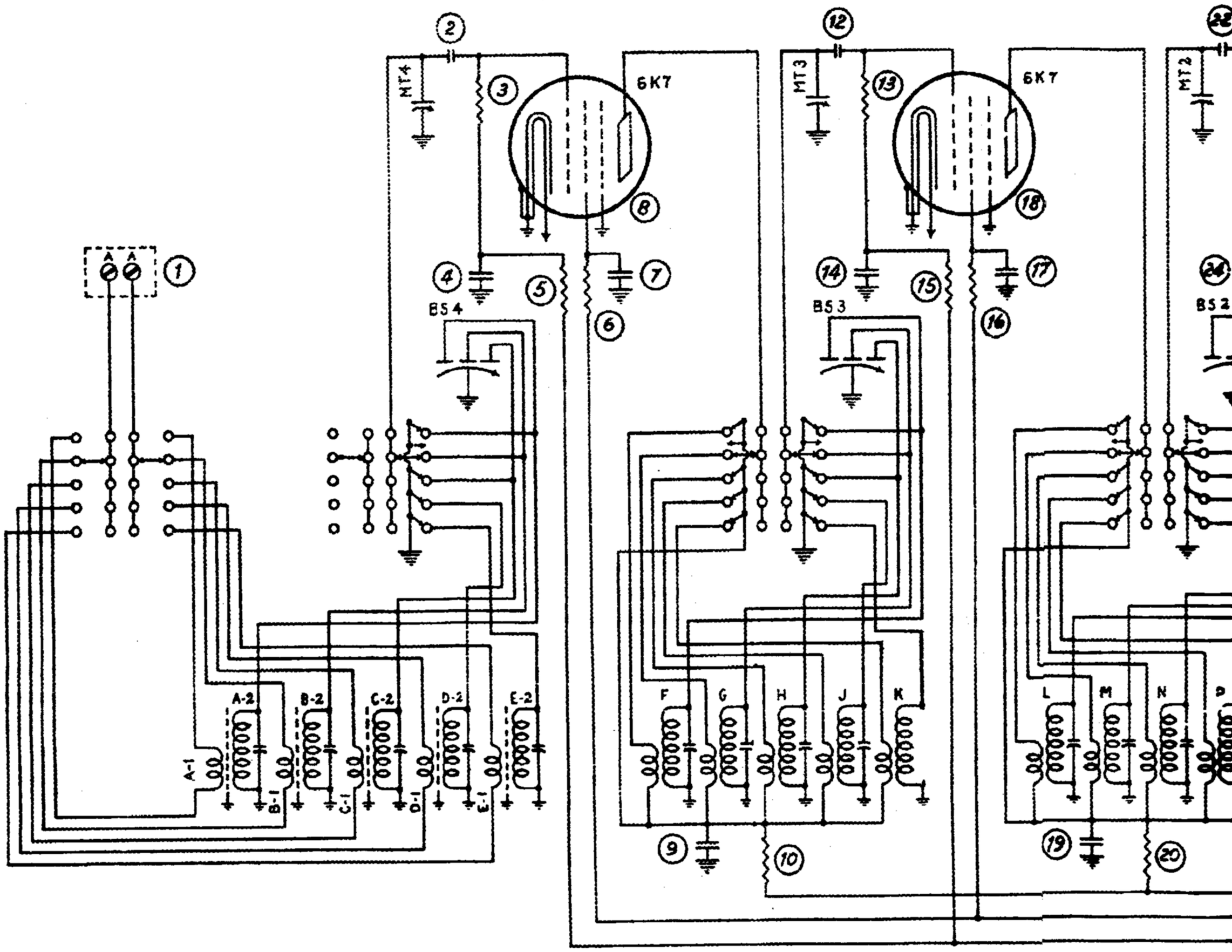

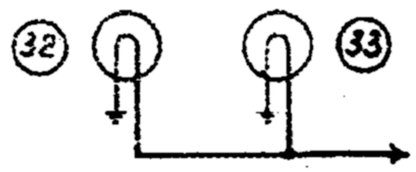

SCHEMATIC DIAGRAM
SUPER-PRO
MODEL SP-110LX

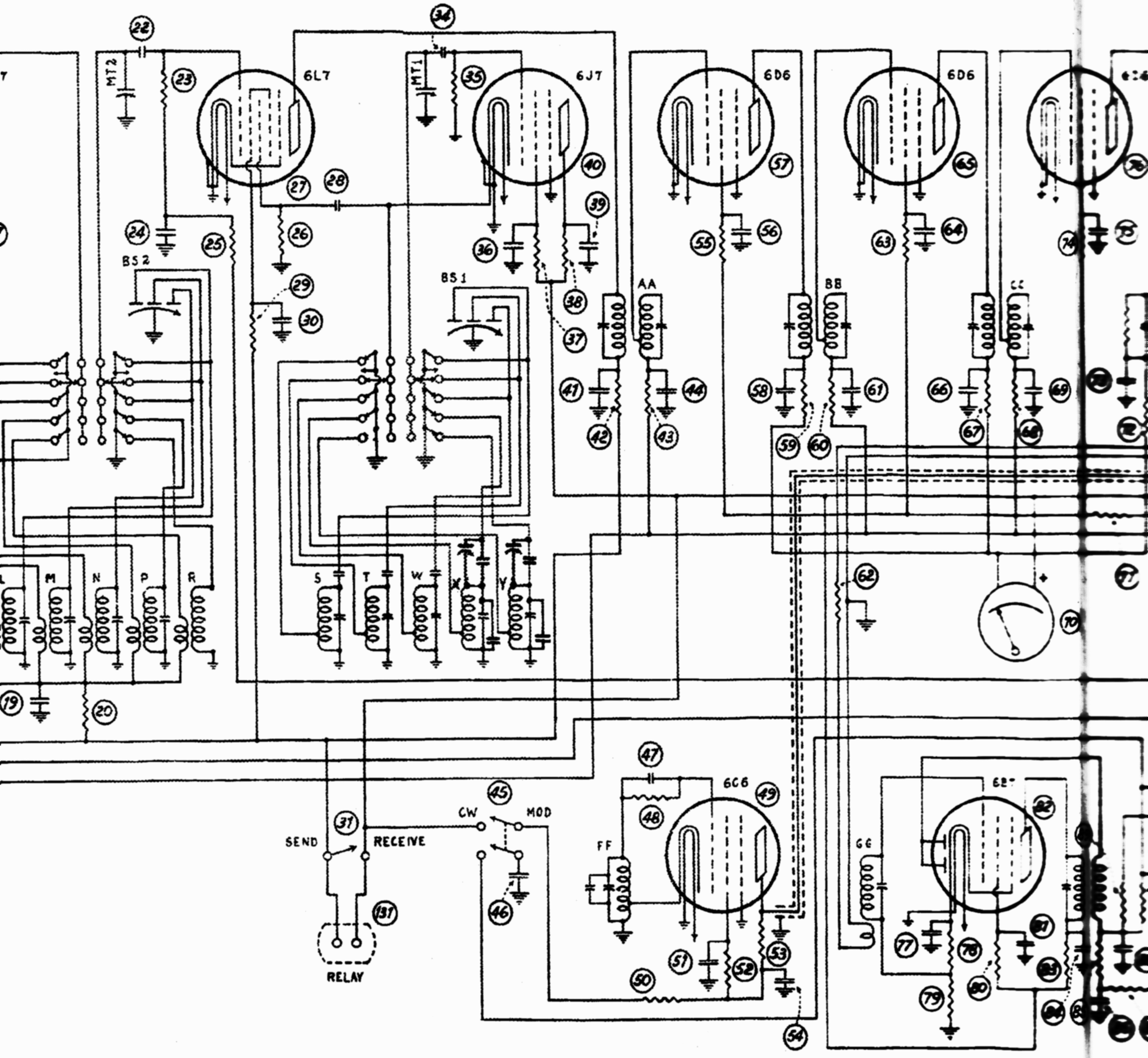
6L7
6J7
6D6
6D6
MT2
MT1
BS2
BS1
AA
BB
CC
6C6
SEND
RECEIVE
CW
MOD
RELAY
FF
GG

FIG. 9

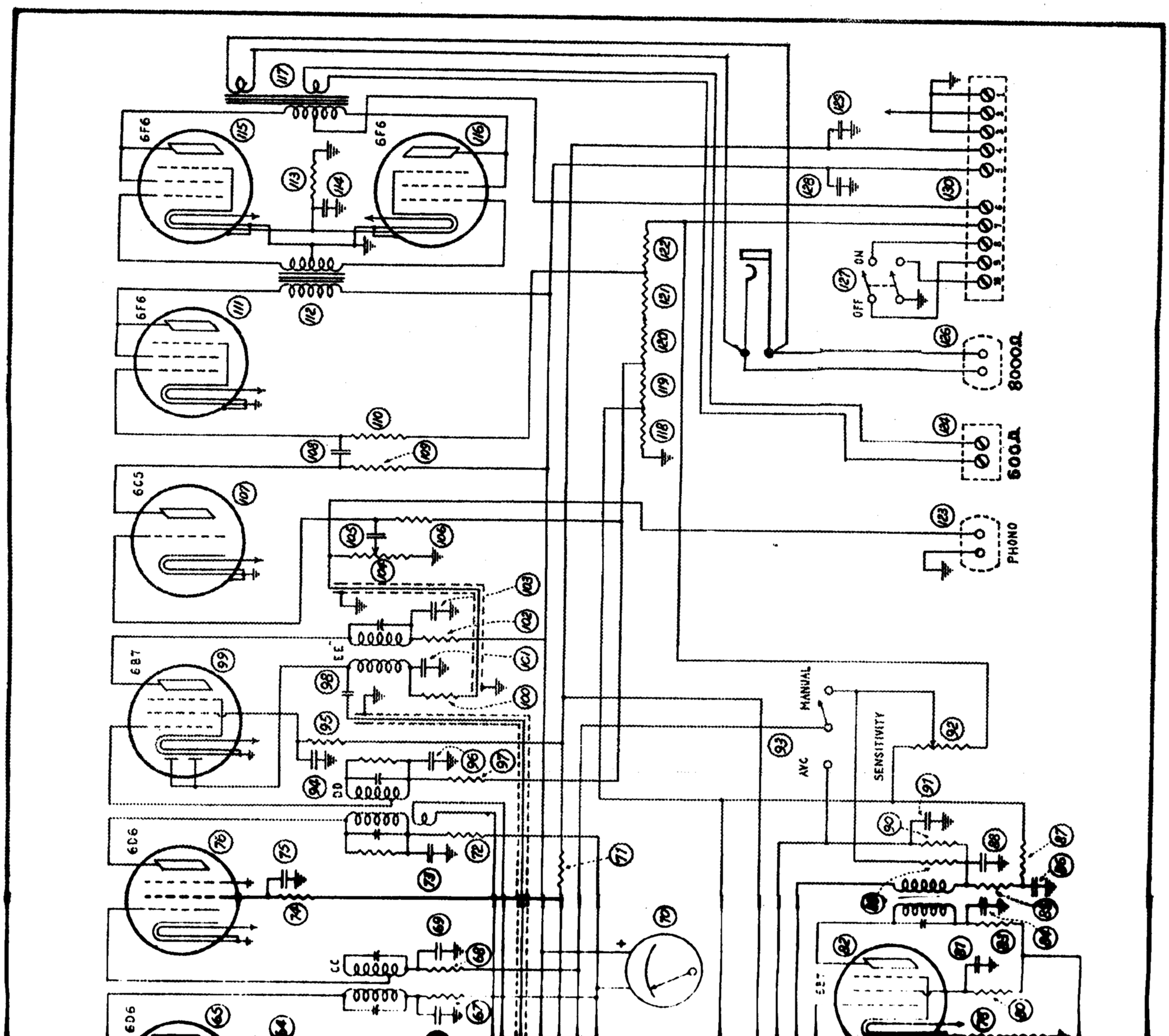
6F6
6F6
6F6
6C5
6E7
6D6
6D6
6E7
MANUAL
AVC
SENSITIVITY
ON
OFF
800Ω
600Ω
PHONO