HP 200CD - Wide Range Oscillator

Wide range low-frequency oscillator, covering from 5 Hz to 600 KHz in five ranges:

- X1	5 Hz	to	60 Hz
- X10	50 Hz	to	600 Hz
- X100	500 Hz	to	6 kHz
- X1,000	5 kHz	to	60 kHz
- X10,000	50 kHz	to	600 kHz

Dial calibrated to 2%.

Output 160 mW (10 volts) into 600 ohm load, 20 volts open circuit. Distorsion less than 1%.

The circuit is based upon a balanced push-pull amplifier and a balanced frequency and amplitude controlling bridge. The frequency is controlled by two arms of the bridge, with series and parallel RC resonating networks. Tuning is accomplished by a triple gang variable capacitor, two sections of which are parallel connected, and fixed resistors selected by the range rotary switch. The opposite arms form a voltage divider, with lamps R13 and R14 used as thermal-dependant resistors, to stabilize the amplitude of oscillations. The block diagram is given below (click to enlarge).

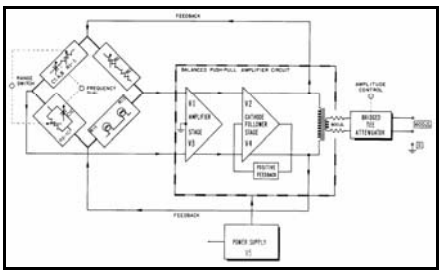

A copy of the manual is available here, HP-200CD. The manual is related to an early series of this generator, still using octal tubes, 6SH7 and 6AU5GT, and the vacuum rectifier, 5AR4.

The set in the collection, S/N 0960A83252, uses silicon rectifier diodes and miniature tubes, 6AU6 and EL86/6CW6.

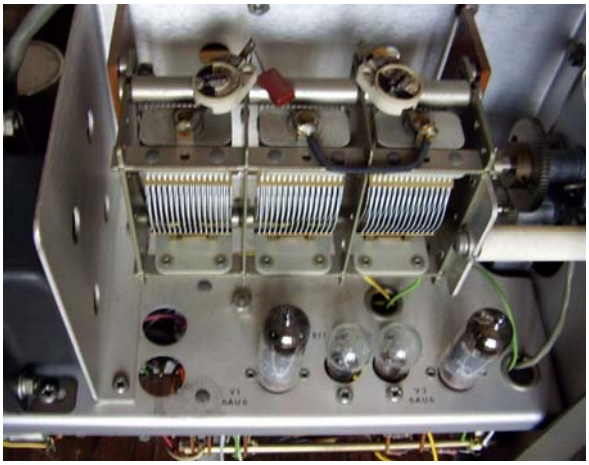

- Click to enlarge

The revision is documented below (click to enlarge).

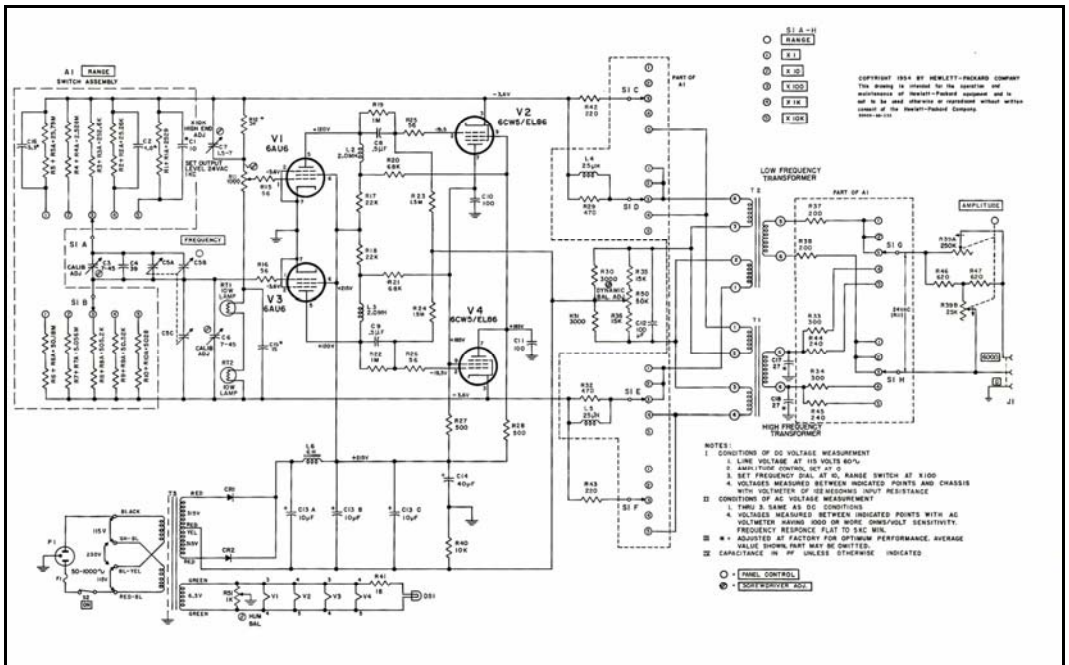

Figure 5-9. Model 200CD Schematic Diagram