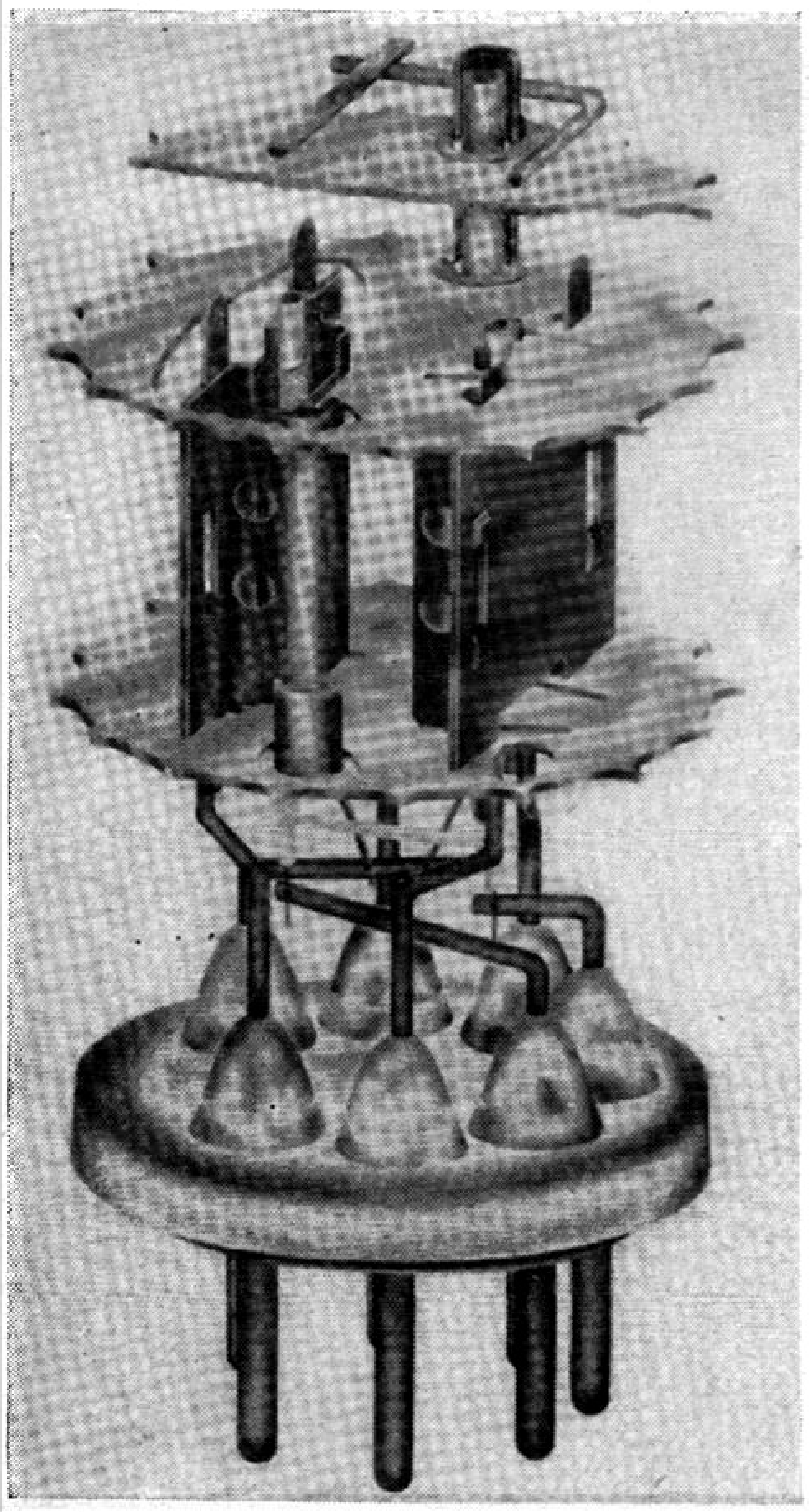

FIG. 1—Conventional mount assembly as used in type 6045 tube

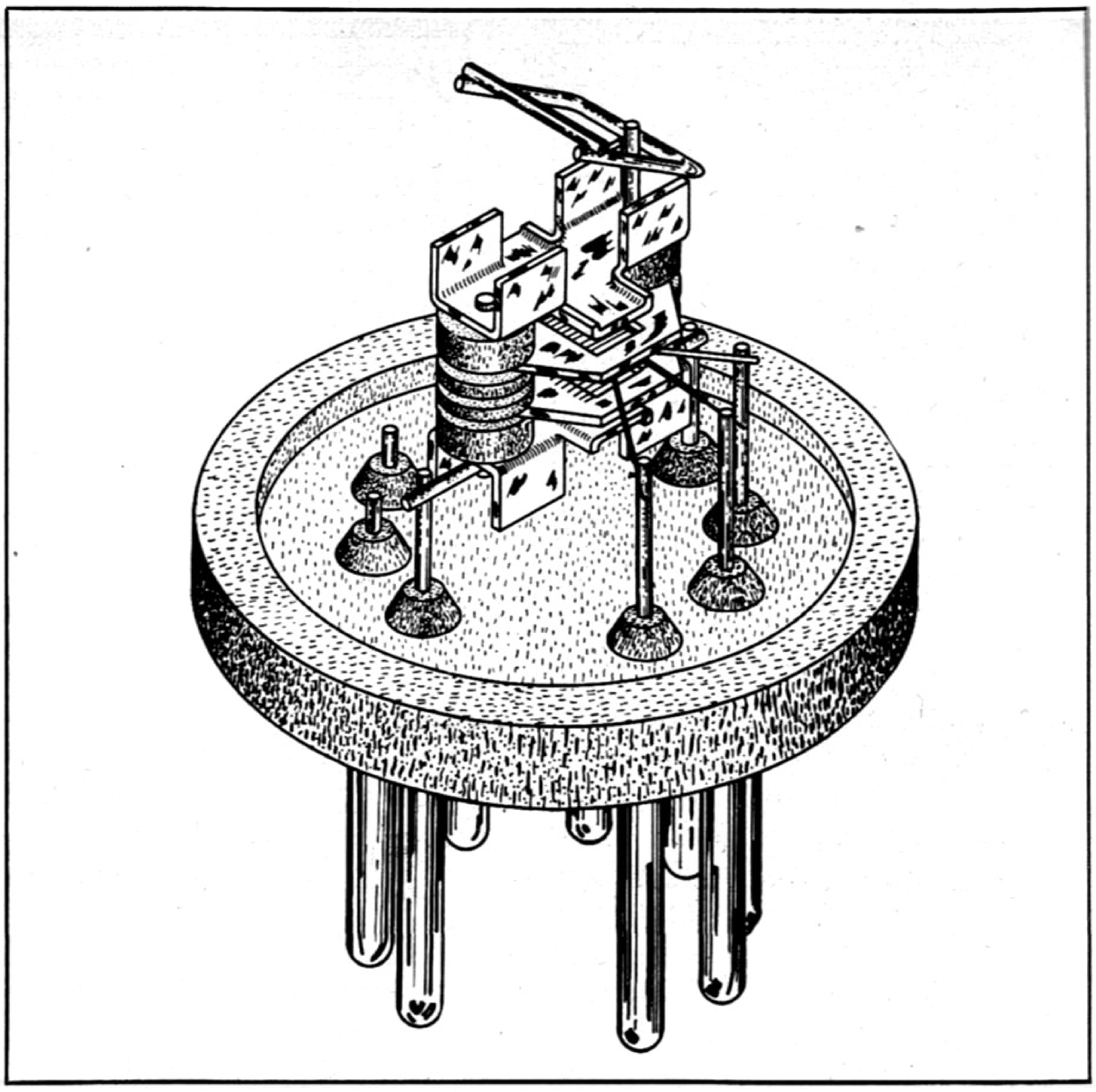

FIG. 2—Type SN-1724D mount as assembled on ceramic stem. All elements are stacked on two vertical pins and positioned by ceramic spacers

Ceramic Tube Mount

By ROBERT N. PALMER

Engineering Manager
Product Development Laboratories
Sylvania Electric Products Inc.
Kew Gardens, New York

THE RECEIVING-TUBE mount described in this paper was designed and developed for machine assembly under a Navy contract with the Bureau of Ships. Every consideration in the design of the mount has, therefore, taken into account the feasibility of building machines to assemble it automatically.

Figure 1 shows a conventional 6045, which is the military version of the 6J6 in that it has been ruggedized and redesigned for more reliable service. One of the most difficult parts to cope with when adapting a mount of this type to machine assembly is the mica. There are two support holes at both the top and bottom where the plate is to be inserted into the mica. There are also two for the grid, one for the cathode and one for each of the supporting members. The total for both of the dual structures is twelve insertions. Inserting these one at a time into the bottom mica is not difficult. When applying the top mica, however, these twelve elements are free and loose at the ends and extremely difficult to insert. To avoid this insertion problem, it was necessary to find some other means of spacing the elements. Consequently, the design of the new SN-1724D tube uses a ceramic washer as the element spacer.

Design Approach

Figure 2 shows the radically new approach to mount assembly. One of the chief differences is the elimination of mica. The elements are stacked one upon the other. The complete mount is assembled on two small pins. First a plate, then a spacer ceramic, a grid, a spacer ceramic, a cathode, a spacer ceramic and any remaining pieces are put on the pins until the top is reached. When the stack is completed, the small pins are hot upset, giving a compact and tight mount assembly. Other overall objectives were to improve reliability and ruggedness, reduce microphonism, achieve high-ambient-temperature operation and achieve long life with greater uniformity. Therefore, it was decided to incorporate not only ceramic spacers between the elements but also a stem and envelope of alumina ceramic.

The method chosen for making the ceramic-to-metal seals and the ceramic-to-ceramic seals is a simple, single-step process using titanium-cored BT solder. Since no

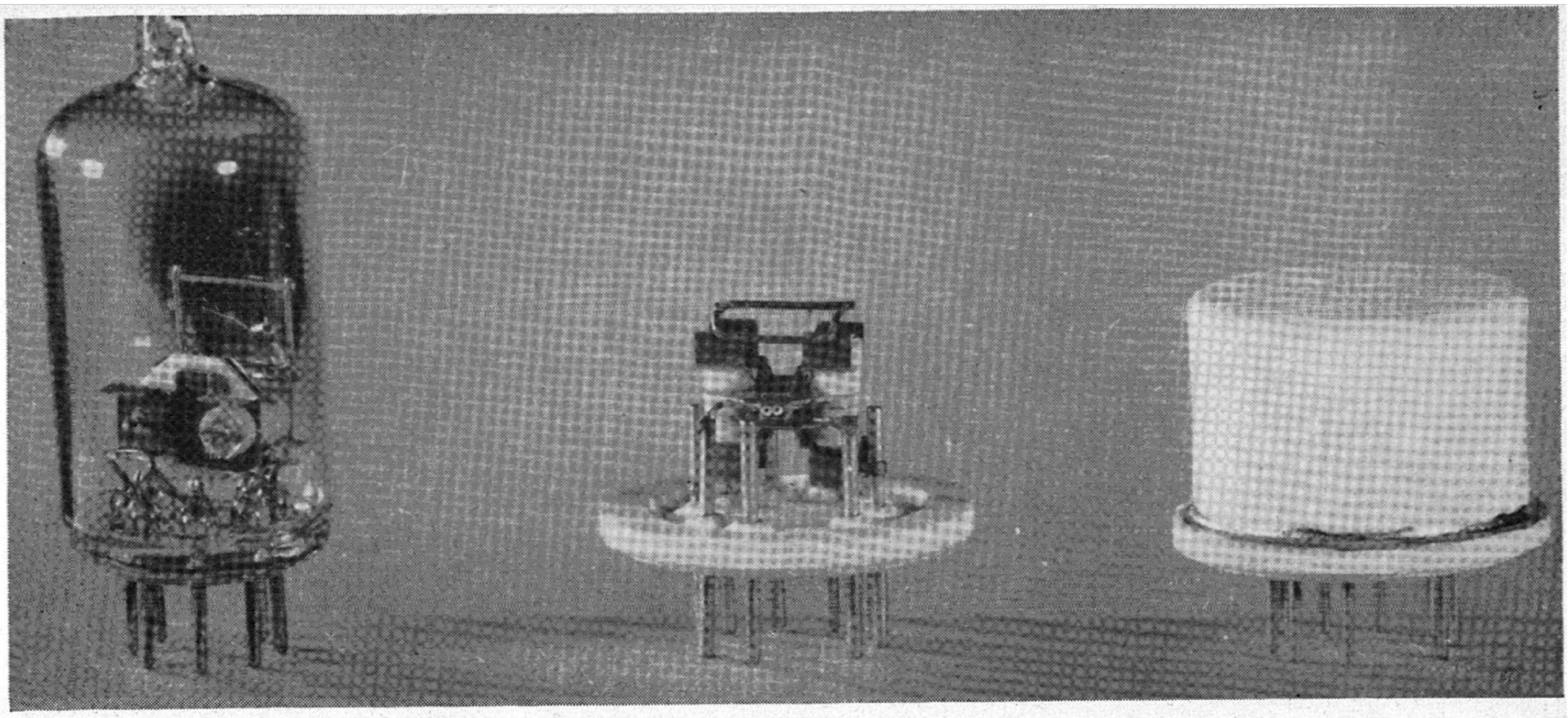

Stacked mount in glass envelope, stacked mount on ceramic stem and same mount enclosed in ceramic envelope

Heat-sensitive mica insulators and glass envelopes of conventional receiving tubes are replaced by ceramic alumina in new stacked design using frame grids positioned precisely by ceramic spacers that can be dropped over support wires by automatic machinery

for Automatic Assembly

mica is used in the mount, it can be placed on a ceramic stem and sealed in a ceramic envelope. This type of structure is possible because the high temperatures needed for sealing have no ill effect on the ceramic spacers. Had mica been used it would deteriorate and break down, resulting in the liberation of water vapor.

Ceramic-to-metal seals and ceramic-to-ceramic seals are made at a temperature of about 900 C. Because of this high baking-out temperature, which glass could not withstand, the finished tubes have less gas to begin with and therefore have a longer gas-free life.

Figure 3 shows how the tube elements are stacked. At the bottom is the plate, and above it the spacers, the frame grid spacer, cathode, frame grid and plate with its corresponding spacers. There is much greater area of support with the frame grid and this type of cathode than there is with a mica support. The only critical dimension is the thickness of the ceramic spacers, because comparatively wide tolerances in the horizontal direction will not disturb the grid-to-cathode or cathode-to-plate spacing.

No active element is inserted into anything. The pieces are merely stacked one upon the other. The grid-to-cathode spacing can easily be changed by changing the thickness of the grid-to-cathode spacer.

Figure 4 compares a conventional mica with the ceramic spacer. The mica itself is easily deformed and broken. When the numerous necessary holes are punched, the mica is weakened further. The hole tolerances themselves can be held to only about 0.001-inch accuracy. An in-line, off-center accuracy can be punched to only about 0.001 inch also. In addition to this, the mica is temperature-limited. As it rises to high temperatures it breaks down and releases water vapor which attacks the cathode and shortens the life of the tube.

On the other hand, the ceramic spacer used in the stacked mount is extremely rugged and tough. The only dimension that need be maintained accurately is the thickness, and this can readily be held to 0.0005 inch.

Cathode Structure

Figure 4 shows also the cathode support assemblies as used in a conventional tube and in a SN-1724D stacked tube. The cathode in the conventional mount is supported only at the end. The mica must be punched so as to be a little larger than the cathode itself to allow for insertion. The tolerances of the hole in the mica

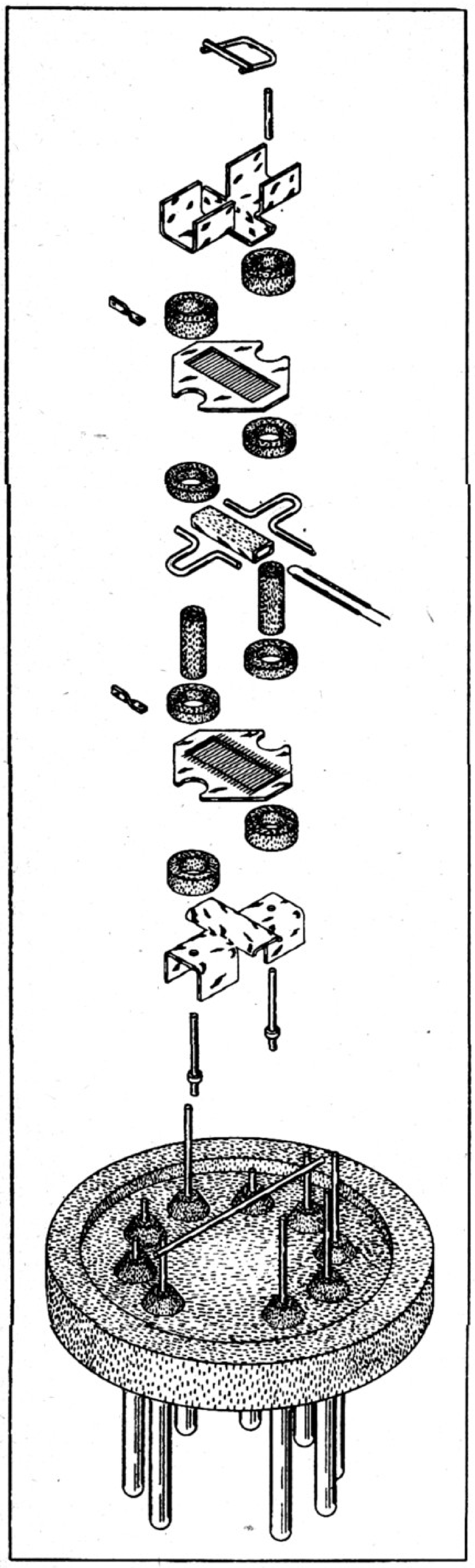

FIG. 3—Exploded view of mount, showing order of stacking

are about 0.001 inch and the cathode tolerances are about the same value. When the cathode is inserted in the mica, the fit may be loose and contribute to microphonism. In addition, the heating and cooling of the cathode gives a sawing action due to the expansion and contraction. This in turn enlarges the cathode hole, making a still looser fit.

The cathode coating must start somewhat above the mica on the bottom of the cathode and below the mica on the top, which means that actually only about 60 percent of the cathode length is used for the emission coating. The rest is unused except for structural support. The high temperature of the cathode, particularly during processing, can and sometimes does break down the mica, liberating water vapor which in turn results in tube loss.

In the stacked tube cathode assembly, loops are welded to the side to give a larger support area. Tolerances are not critical except that these loops must be accurately welded so that the proper spacing between grid and cathode is obtained. The cathode is held extremely tightly; the loops are placed over the ceramic supports and all are compressed together in the final hot upsetting at the top. These design features contribute to a less noisy tube. The whole length of the cathode is used for the cathode coating area. There is no loss of space or coated area as required in the mica-supported conventional cathodes.

Grid Assembly

Figure 4 likewise compares the conventional and stacked tube grid assemblies. With the conventional type of grid, the lateral wires are spaced by notches in the side-rod supports. These notches are then swaged over to hold the laterals in place. This operation enlarges the side-rod material. If the nicking and swaging are done along the inactive ends of the side-rods, there is again a sawing action when inserted into the mica which enlarges the mica hole and contributes to microphonism.

In addition, the side-rod grid is extremely fragile. If it is picked up with too much compression by the fingers, the minor dimension is changed and distorted. For the same reasons it is extremely difficult to measure this dimension and keep it accurate. The frame grid is perfectly flat and because of the mass of the frame will have no variation of major dimension. The minor dimension is controlled entirely by the spacer ceramics. There is no nicking and no swaging on this type of grid.

The lateral wires of the frame grid are wound on two frames back to back and the whole assembly is then brazed. This frame material is molybdenum and is brazed with gold. The fact that there is no nicking or swaging allows the use of smaller lateral wires and higher tension. The whole frame grid is much more rugged than the side-rod grid. The frame grid can be handled easily without distortion and the separate grids can be stacked into piles for later assembly. The result is greater uniformity of tube characteristics.

Tube Performance

The improvement in uniformity, shown in Fig. 5, illustrates what happens when a conventional type of structure has its regular side-rod grid replaced by a frame grid. With the conventional grid, the mutual conductance spread was from 800 to 2,000 micromhos. These measurements were made right off the exhaust machine with no culling out and no previous testing. When this grid was replaced with a frame type of grid and the tubes were again tested right off exhaust without any sorting or culling, the

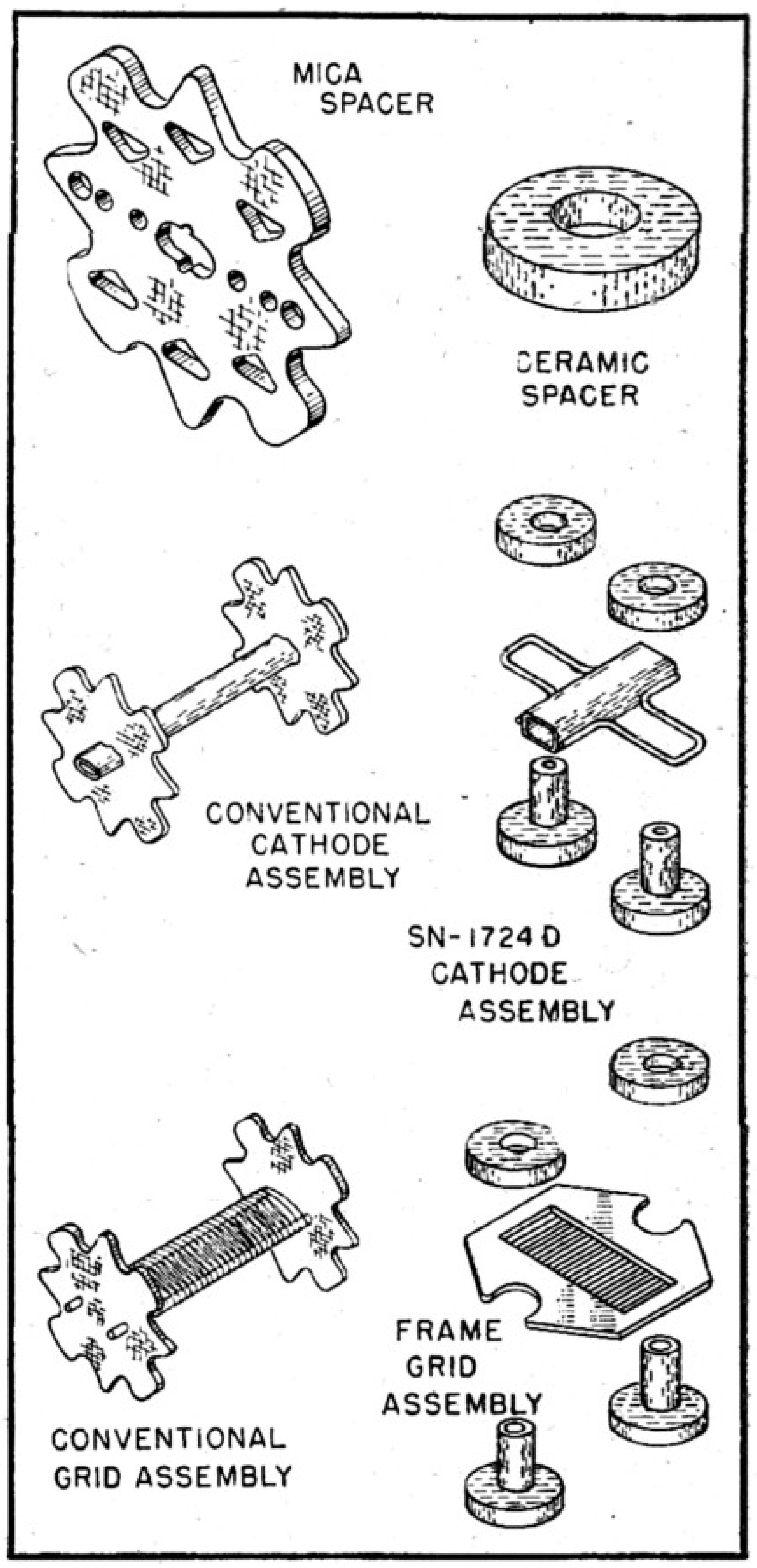

FIG. 4—Comparison of conventional assemblies with ceramic assemblies

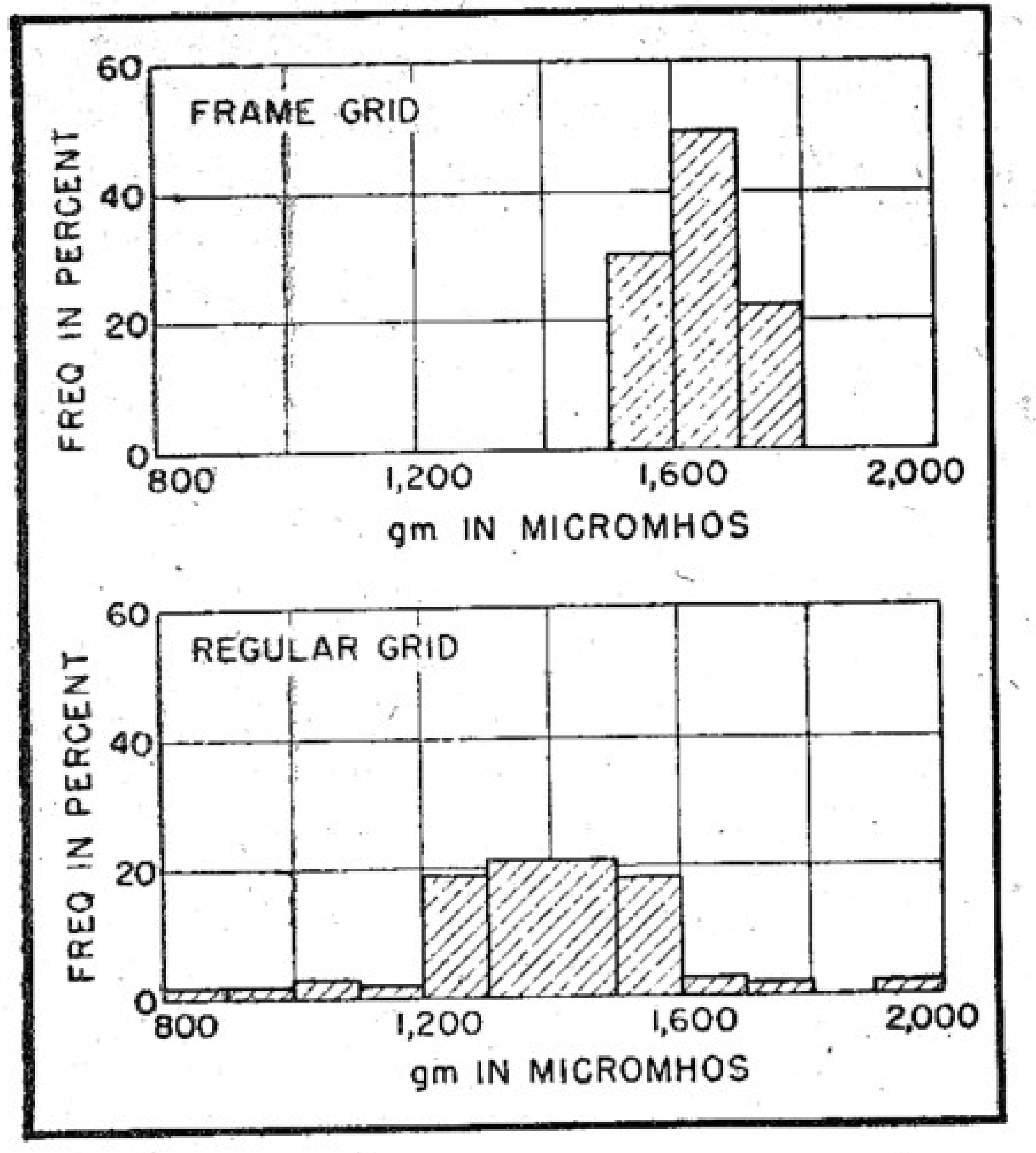

FIG. 5—Comparison of transconductance characteristics, showing reduced spread achieved with frame grid

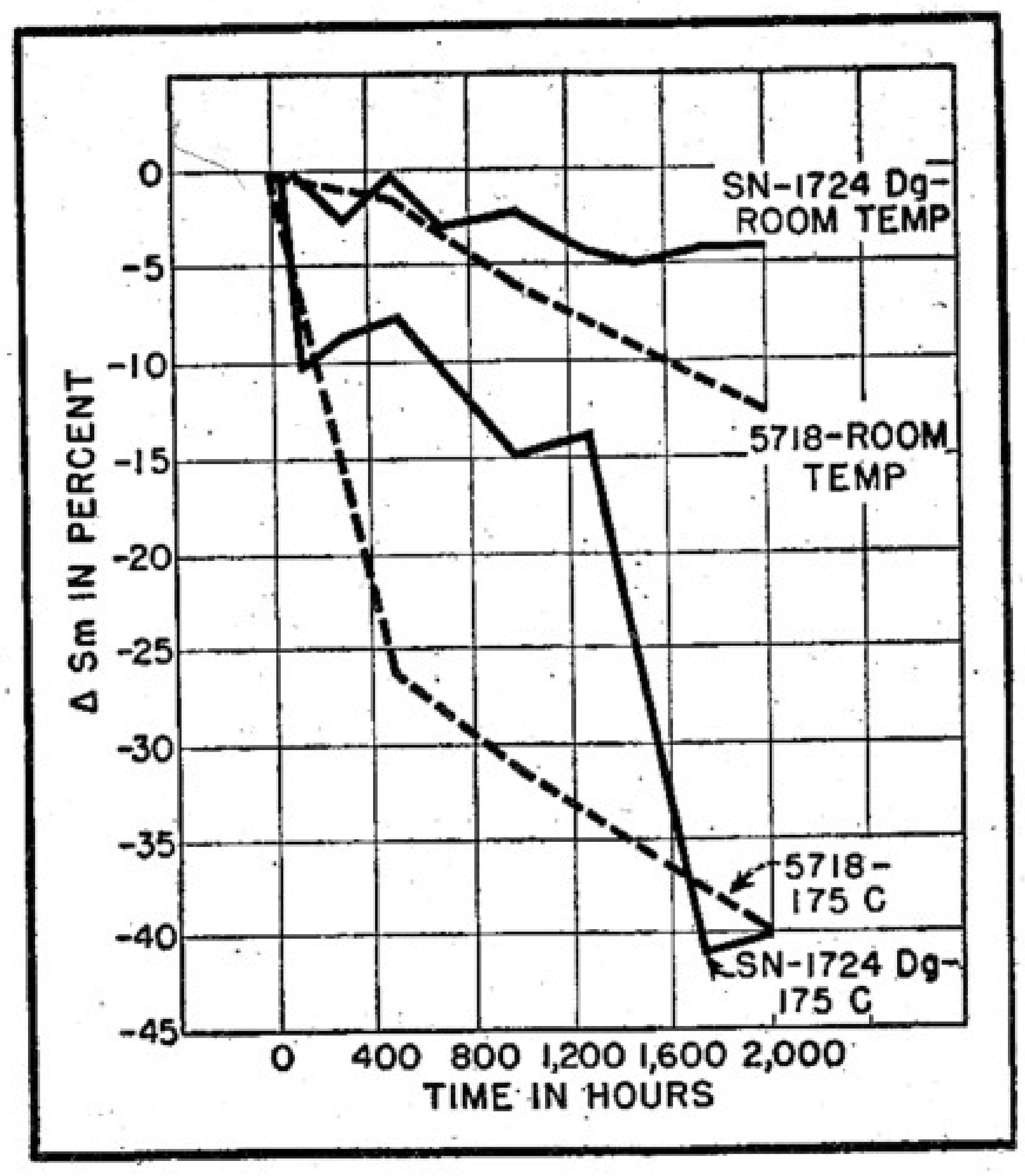

FIG. 6—Comparison of life test results at both room and high ambient temperatures

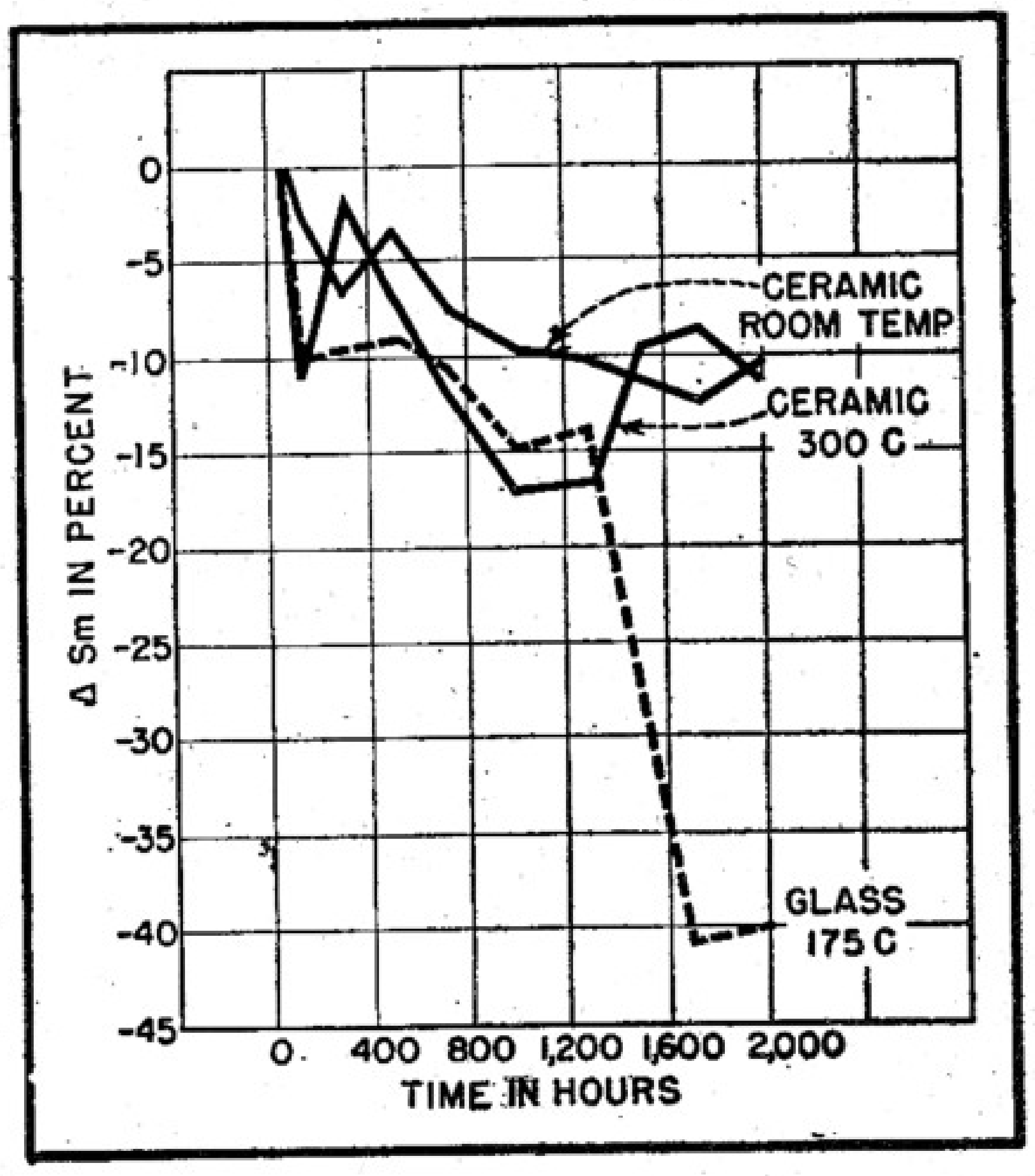

FIG. 7—Comparison of life test results for stacked mount in glass and in ceramic envelopes

spread was considerably reduced, being only between 1,500 and 1,800.

A sealed-in ceramic envelope and stem with the ceramic mount inside is much stronger than a glass envelope. It can be handled, dropped and shipped without breakage. In fact, it is extremely difficult to open. The ceramic envelope is also extremely rugged under thermal shock conditions. It has been removed from liquid nitrogen at −195 C and immersed in boiling water at 100 C, a range of almost 300 degrees, without fracture. This envelope structure has also been placed in an air furnace at room temperature and raised to 450 C for more than 100 cycles without fracture.

The ceramic envelope can be strapped directly to the chassis or it can be socketed. The basing arrangement allows for insertion into a jumbo miniature socket. Lead wires can also be soldered directly to the pins. The ceramic envelope permits high-temperature outgassing on exhaust, a fact which also permits high bake-out temperature and high-ambient-temperature operation.

Life Tests

Figure 6 shows life test results of the SN-1724Dg. The g indicates that the stacked mount has been placed in a T5½ miniature glass envelope. The top curve shows that at room temperature the mutual conductance dropped off less than 5 percent at the end of 2,000 hours, whereas for the conventional 5718 subminiature triode it fell off about 13 percent at the end of 2,000 hours.

These two types were then placed on life test at an ambient temperature of 175 C. The 5718 immediately began falling off; at the end of approximately 450 hours its mutual conductance was down by about 25 percent, and at the end of 2,000 hours was down by about 40 percent. The stacked mount assembly held up fairly well for a little more than 1,200 hours, with mutual conductance dropping off only about 15 percent. At that time it began to drop off rapidly and reached about the same point as the 5718. This rapid dropping off is attributable to electrolysis which is set up in the glass due to the high temperatures.

Figure 7 shows some life test results on the SN-1724Dc, the c indicating a stacked mount in a ceramic envelope. At room temperature the mutual conductance had dropped off at the end of 2,000 hours to about 10 percent, which is not as good as the stacked mount in the glass envelope and is attributed to early difficulties in processing a ceramic enclosed mount.

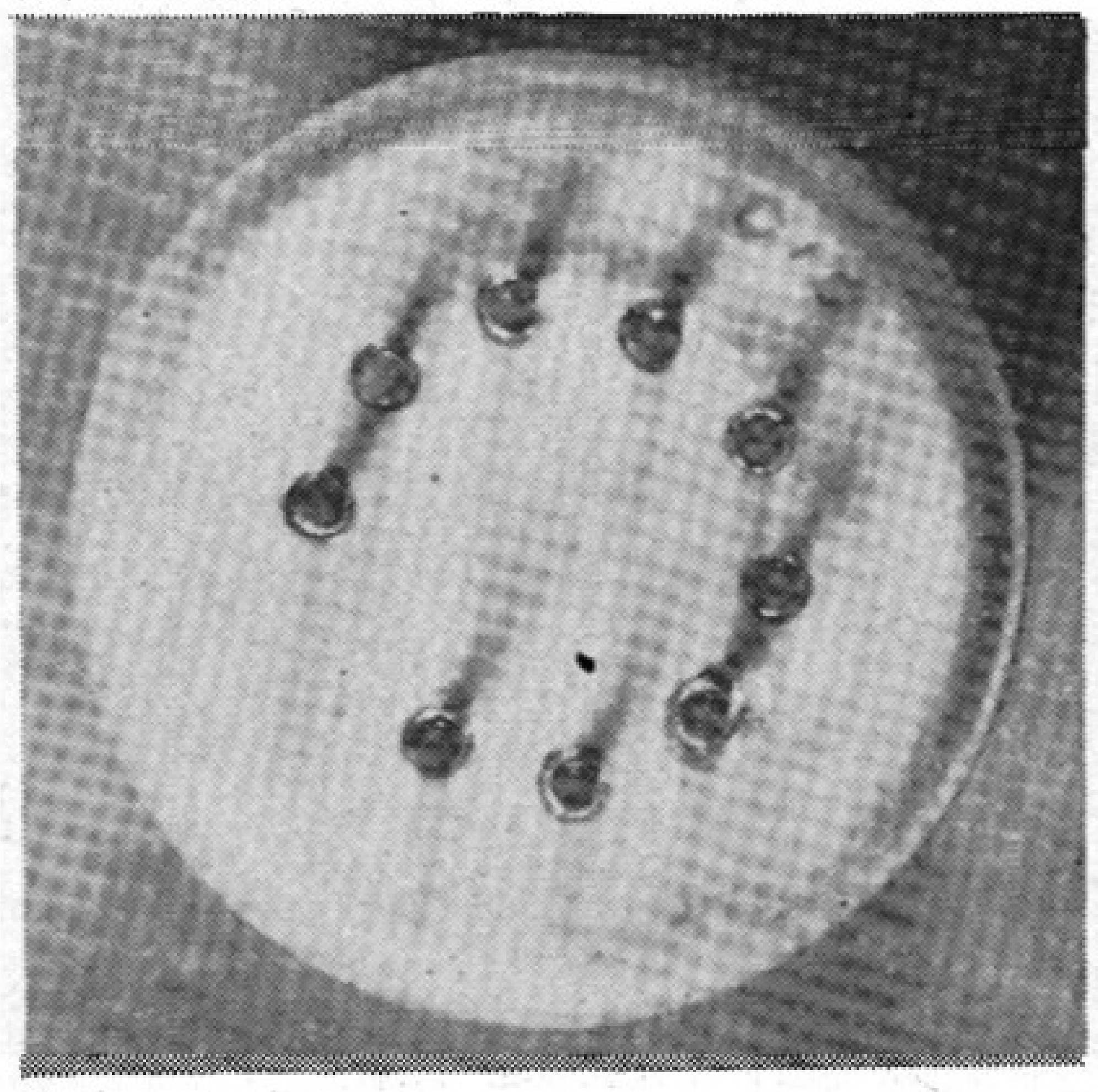

Bottom view of ceramic stem

Some of these tubes were also put on 300 C ambient life test, which is believed to be higher than any glass tube can withstand. At the end of 2,000 hours, the mutual conductance of the ceramic-envelope tube has about the same value as those on room-temperature life. Life test results at 175 C for the SN-1724 sealed in glass are also plotted in Fig. 6; these show the effect of electrolysis of the glass, which caused a rapid slump in mutual conductance after about 1,200 hours.

At the present time some life tests are under way at 400 C ambient temperature. These tubes have reached about 1,000 hours and are still satisfactory.

To determine the high dissipation capabilities of this type of structure, tests were run with the plate dissipation raised so that the plate temperature equalled that of the cathode. Tubes were run under this condition for well over 200 hours with no deterioration and no gas evolution.

Most of the tubes made have had about 1 millivolt noise output at 20 G. The electrical characteristics are more uniform than conventional tubes at normal life. The tubes are certainly better at high ambient life, and performance on 400 C ambient life after about 1,000 hours is still satisfactory.